ORDER NO. BSD04030090
D21

# Service Manual


| | |
|---|---|
| Sec. 1 | Service Information |
| Sec. 2 | Disassembly Procedures |
| Sec. 3 | Mechanical Adjustment |
| Sec. 4 | Electrical Adjustment |
| Sec. 5 | Block Diagrams |
| Sec. 6 | Schematic Diagrams |
| Sec. 7 | Circuit Board Diagrams |
| Sec. 8 | Exploded Views & Replacement Parts List |


Mini DV

Digital Video Camera Recorder

## AG-DVC30P/E
## AG-DVC32EN
## AG-DVC33MC

XLR Microphone Adapter

## AG-MYA30G

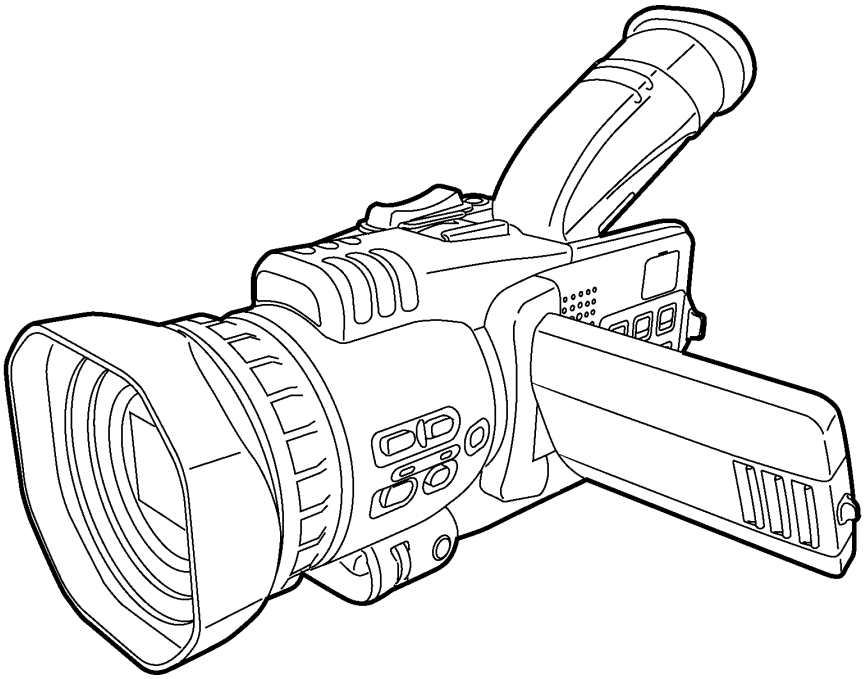

AG-DVC30/32/33

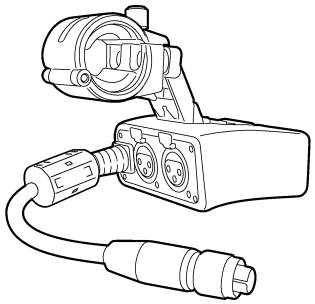

AG-MYA30G

Panasonic

© 2004 Matsushita Electric Industrial Co., Ltd. All rights reserved.
Unauthorized copying and distribution is a violation of law.

⚠ **WARNING**

This service information is designed for experienced repair technicians only and is not designed for use by the general public. It does not contain warnings or cautions to advise non-technical individuals of potential dangers in attempting to service a product. Products powered by electricity should be serviced or repaired only by experienced professional technicians. Any attempt to service or repair the product or products dealt with in this service information by anyone else could result in serious injury or death.

# AG-DVC30P

## *Specifications*

## [GENERAL]

**Supply voltage:** DC 7.2 V/7.9 V
**Power consumption:**
5.0 W (when the viewfinder is used)
6.1 W (when the LCD monitor is used)
**Power consumption when XLR microphone adapter (AG-MYA30G) is connected:**
6.2 W (when the viewfinder is used)
7.4 W (when the LCD monitor is used)
8.5 W (maximum)

▭ indicates safety information.

**Ambient operating temperature**
32°F to 104°F (0°C to 40°C)
**Ambient operating humidity**
10% to 85% (no condensation)
**Weight**
2.31 lb (1.05 kg)
(excluding battery and accessories)
**Dimensions (W×H×D)**
4 3/8×4 5/8×10 inches (110×116×253 mm)
The height increases to 6 5/16 inches (160 mm) when the handle is attached.
**Recording format**
Digital video SD format
**Tape format**
Mini DV system
**Video signals recorded**
525i (NTSC)
**Shooting mode**
60i
**Audio signals recorded**
PCM digital recording
16 bits: 48 kHz/2 channels
12 bits: 32 kHz/4 channels
**Recording tracks**
Digital video/audio:
Helical tracks
Time code:
Helical track (sub code area)
**Tape speeds**
SP mode: 18.812 mm/sec.
LP mode: 12.555 mm/sec.
**Recording time (when AY-DVM60 is used)**
SP mode: 60 minutes
LP mode: 90 minutes
**Tapes used**
6.35 mm wide metal tapes
**FF/REW time**
Approx. 140 sec. (when AY-DVM60 is used)

**Pickup devices**
Interline transfer 1/4-inch CCD image senser (×3)
**Number of pixels**
Total number of pixels: 410,000,
Number of effective pixels: 380,000
(pixel offset system)
**Lens**
Leica DICOMAR optical image stabilizer lens, motorized 16× zoom,
F1.6 (f=4.1 to 65.6 mm)
(35 mm equivalent: 39.5 to 632 mm)
**Color separation optical system**
Prism system
**ND filter**
Interlocked with iris, auto ON/OFF
**Gain settings**
0, +3, +6, +9, +12, +15, +18 dB
**Shutter speed settings**
Slow shutter speeds:
1/4, 1/8, 1/15, 1/30 sec.
Regular shutter speeds:
1/60, 1/100, 1/120, 1/180, 1/250, 1/350, 1/500, 1/750, 1/1000, 1/1500, 1/2000, 1/3000, 1/4000, 1/8000 sec.
Synchro scan shutter speeds:
1/60.3 to 1/250 sec.
**Minimum subject illuminance**
4 lux:
F1.6, +18 dB gain, 50 IRE video output
**Lens hood**
Large-sized lens hood with wide angle of view
**Filter diameter**
43 mm
**LCD monitor**
3.5-inch LCD color monitor, 200,000 pixels
**Viewfinder**
0.44-inch, LCD color viewfinder, 180,000 pixels
**Internal microphone**
Stereo microphone
**Internal speaker**
20 mm diameter

## [VIDEO]

**Sampling frequency**
Y: 13.5 MHz, PB/PR: 3.375 MHz
**Quantizing**
8 bits
**Video compression system**
DCT + variable-length code
**Error correction**
Reed-Solomon product code

## [AUDIO]

**Sampling frequency**
48 kHz/32 kHz
**Quantizing**
16 bits/12 bits
**Frequency response**
20 Hz to 20 kHz
**Wow & flutter**
Below measurable limits

## [CONNECTORS]

**MIC**
Stereo (3.5 mm diameter)
Mic sensitivity: –70 dBV
**S-VIDEO IN/OUT**
(input/output switched automatically)
S-connector, Y/C separate signal input/output
Y: 1.0 V [p-p], C: 0.286 V [p-p], 75 Ω
**AV IN/OUT**
(input/output switched automatically)
Mini jack (3.5 mm diameter)
Video:
Analog composite input/output, 1.0 V [p-p], 75 Ω
Audio (CH1, CH2):
Input: –10 dBV, high impedance
Output: –10 dBV, low impedance
**XLR ADAPTER**
Dedicated mini XLR connector
**DC input (INPUT 7.9 V)**
DC 7.9 V
**PHONES**
Stereo (3.5 mm diameter)
**DV**
4 pins, digital input/output, compliant with IEEE 1394 standard
**CAM REMOTE**
Mini jack (2.5 mm diameter)

## [AC ADAPTER]

**Power Source:**
110/120/220/240 V AC, 50/60 Hz
**Power Consumption:**
18 W

indicates safety information.

**Weight**
0.35 lb (0.16 kg)
**Dimensions (W×H×D)**
2 13/16×1 13/16×4 5/8 inches
(70×44.5×116 mm)

## [OPTIONAL UNITS]

**Wide conversion lens**
AG-LW4307P
**Stereo microphone**
AG-MC15P
**XLR microphone**
AG-MC100G
**XLR microphone adapter**
AG-MYA30G
**Infrared light**
AG-YRL30G
**Hard carrying case**
AG-HT30G
**Soft carrying case**
AG-SC100G
**Battery**
CGR-D16
(1600 mAh: equivalent to accessory battery)
CGP-D28 (2800 mAh)
CGA-D54 (5400 mAh)
**AC adapter kit**
AG-B15 (equivalent to accessory AC cord, DC cord, AC adapter)
**Cleaning tape**
AY-DVMCLA

Weight and dimensions shown are approximate. Specifications are subject to change without notice.

# Specifications

## [GENERAL]

**Supply voltage:** DC 7.2 V/7.9 V
**Power consumption:**
5.0 W (when the viewfinder is used)
6.1 W (when the LCD monitor is used)
**Power consumption when XLR microphone adapter (AG-MYA30G) is connected:**
6.2 W (when the viewfinder is used)
7.4 W (when the LCD monitor is used)
8.5 W (maximum)

indicates safety information.

**Ambient operating temperature**
0°C to 40°C
**Ambient operating humidity**
10% to 85% (no condensation)
**Weight**
1.05 kg
(excluding battery and accessories)
**Dimensions (W×H×D)**
110×116×253 mm
The height increases to 160 mm when the handle is attached.
**Recording format**
Digital video SD format
**Tape format**
Mini DV system
**Video signals recorded**
625i (PAL)
**Shooting mode**
50i
**Audio signals recorded**
PCM digital recording
16 bits: 48 kHz/2 channels
12 bits: 32 kHz/4 channels
**Recording tracks**
Digital video/audio:
Helical tracks
Time code:
Helical track (sub code area)
**Tape speeds**
SP mode: 18.831 mm/sec.
LP mode: 12.568 mm/sec.
**Recording time (when AY-DVM60 is used)**
SP mode: 60 minutes
LP mode: 90 minutes
**Tapes used**
6.35 mm wide metal tapes
**FF/REW time**
Approx. 140 sec. (when AY-DVM60 is used)

**Pickup devices**
Interline transfer 1/4-inch CCD image senser (×3)
**Number of pixels**
Total number of pixels: 470,000,
Number of effective pixels: 440,000
(pixel offset system)
**Lens**
Leica DICOMAR optical image stabilizer lens, motorized 16× zoom, F1.6 (f=4.1 to 65.6 mm)
(35 mm equivalent: 39.5 to 632 mm)
**Colour separation optical system**
Prism system
**ND filter**
Interlocked with iris, ON/OFF switched automatically
**Gain settings**
0, +3, +6, +9, +12, +15, +18 dB
**Shutter speed settings**
Slow shutter speeds:
1/3, 1/6, 1/12, 1/25 sec.
Regular shutter speeds:
1/50, 1/60, 1/120, 1/180, 1/250, 1/350, 1/500, 1/750, 1/1000, 1/1500, 1/2000, 1/3000, 1/4000, 1/8000 sec.
Synchro scan shutter speeds:
1/50.2 to 1/248 sec.
**Minimum subject illuminance**
4 lux:
F1.6, +18 dB gain, 50% video output
**Lens hood**
Large-sized lens hood with wide angle of view
**Filter diameter**
43 mm
**LCD monitor**
3.5-inch LCD colour monitor, 200,000 pixels
**Viewfinder**
0.44-inch, LCD colour viewfinder, 180,000 pixels
**Internal microphone**
Stereo microphone
**Internal speaker**
20 mm diameter

## [VIDEO]

**Sampling frequency**
Y: 13.5 MHz, PB/PR: 6.75 MHz
**Quantizing**
8 bits
**Video compression system**
DCT + variable-length code
**Error correction**
Reed-Solomon product code

## [AUDIO]

**Sampling frequency**
48 kHz/32 kHz
**Quantizing**
16 bits/12 bits
**Frequency response**
20 Hz to 20 kHz
**Wow & flutter**
Below measurable limits

## [CONNECTORS]

**MIC**
Stereo (3.5 mm diameter)
Mic sensitivity: –70 dBV
**S-VIDEO IN/OUT**
(input/output switched automatically)
S-connector, Y/C separate signal input/output
Y: 1.0 V [p-p], C: 0.3 V [p-p], 75 Ω
**AV IN/OUT**
(input/output switched automatically)
Mini jack (3.5 mm diameter)
Video:
Analogue composite input/output, 1.0 V [p-p], 75 Ω
Audio (CH1, CH2):
Input: –10 dBV, high impedance
Output: –10 dBV, low impedance
**XLR ADAPTER**
Dedicated mini XLR connector
**DC input (INPUT 7.9 V)**
DC 7.9 V
**PHONES**
Stereo (3.5 mm diameter)
**DV**
4 pins, digital input/output, compliant with IEEE 1394 standard
**CAM REMOTE**
Mini jack (2.5 mm diameter)

## [AC ADAPTER]

**Input:**
100 – 240 V AC, 50/60 Hz, 20 W
**Output:**
Video camera: DC 7.9 V, 1.4 A (max.)
Charge: DC 8.4 V, 1.2 A

indicates safety information.

**Weight**
0.16 kg
**Dimensions (W×H×D)**
70×44.5×116 mm

## [OPTIONAL UNITS]

**Wide conversion lens**
AG-LW4307P
**Stereo microphone**
AG-MC15P
**XLR microphone**
AG-MC100G
**XLR microphone adapter**
AG-MYA30G
**Infrared light**
AG-YRL30G
**Hard carrying case**
AG-HT30G
**Soft carrying case**
AG-SC100G
**Battery**
CGR-D16S
(1600 mAh: equivalent to accessory battery)
CGP-D28S (2800 mAh)
CGA-D54S (5400 mAh)
**AC adapter kit**
AG-B15E (equivalent to accessory AC cord, DC cord, AC adapter)
**Cleaning tape**
AY-DVMCLC

Weight and dimensions shown are approximate. Specifications are subject to change without notice.

# Specifications

**Ambient operating temperature:**
32°F to 104°F (0°C to +40°C)
**Ambient operating humidity:**
10% to 85% (no condensation)
**Weight:**
0.407 lb (185 g)
Excluding microphone holder
**Dimensions (W×H×D):**
2 3/4×1 1/2×3 inches
(69.6×36.6×75 mm)
Excluding microphone holder

**XLR connector (INPUT1, INPUT2):**
XLR (3 pins) ×2 (CH1, CH2)
LINE/MIC switching, high impedance
LINE : 0 dBu
MIC : –50 dBu/–60 dBu (setting selected using ATT switch)

# SAFETY PRECAUTIONS

## GENERAL GUIDELINES

1. When servicing, observe the original lead dress. If a short circuit is found, replace all parts, which have been over-heated or damaged by the short circuit.
2. After servicing, see to it that all the protective devices such as insulation barriers, insulation papers shields are properly installed.
3. After servicing, make the following leakage current checks to prevent the customer from being exposed to shock hazards.

## LEAKAGE CURRENT COLD CHECK

1. Unplug the AC cord and connect a jumper between the two prongs on the plug.
2. Measure the resistance value, with an ohm meter, between the jumpered AC plug and each exposed metallic cabinet part on the equipment such as screwheads, connectors, control shafts, etc. The resistance value must be more than 5MΩ.

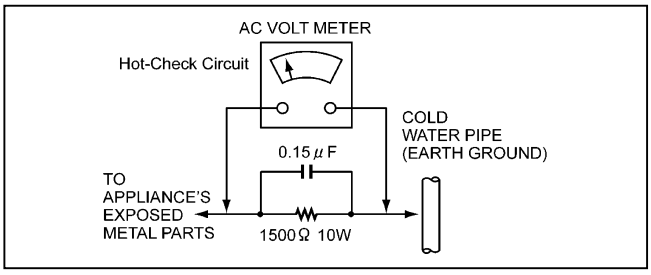


**Figure1**

## LEAKAGE CURRENT HOT CHECK (See Figure 1)

1. Plug the AC cord directly into the AC outlet.
   Do not use an isolation transformer for this check.
2. Connect a 1.5KΩ, 10W resistor, in parallel with a 0.15μ F capacitor, between each exposed metallic part on the set an a good earth ground such as a water pipe, as shown in Figure1.
3. Use an AC voltmeter, with 1000 ohms/volt or more sensitivity, to measure the potential across the resistor.
4. Check each exposed metallic part, and measure the voltage at each point.
5. Reverse the AC plug in the AC outlet repeat each of the above measurements.
6. The potential at any point should not exceed 0.15 volts RMS. A leakage current tester (Simpson Model 229 equivalent) may be used to make the hot checks, leakage current must not exceed 0.1 milliamp. In case a measurement is outside of the limits specified, there is a possibility of a shock hazard, and the equipment should be repaired and rechecked before it is returned to the customer.

## ABOUT LEAD FREE SOLDER (PbF)

**Distinction of Pbf PCB:**
PCBs (manufactured) using lead free solder will have a PbF stamp on the PCB.
**Caution:**
1. Pb free solder has a higher melting point than standard solder; Typically the melting point is 50–70˚F (30-40˚C) higher. Please use a high temperature soldering iron. In case of the soldering iron with temperature control, please set it to 700±20˚F (370±10˚C).
2. Pb free solder will tend to splash when heated too high (about 1100˚F/600˚C).

## ELECTROSTATICALLY SENSITIVE (ES) DEVICES

Some semiconductor (solid state) devices can be damaged easily by static electricity. Such components commonly are called Electrostatically sensitive (ED) Devices. Examples of typical ES devices are integrated circuits and some field-effect transistors and semiconductor "chip" components. The following techniques should be used to help reduce the incidence of component damage caused by static electricity.
1. Immediately before handling any semiconductor component or semiconductor-equipped assembly, drain off any electrostatic charge on your body by touching a known earth ground.
   Alternatively, obtain and wear a commercially available discharging wrist trap device, which should be removed for potential shock reasons prior to applying power to the unit under test.
2. After removing an electrical assembly equipped with ES devices, place the assembly on a conductive surface such as aluminum foil, to prevent electrostatic charge buildup or exposure of the assembly.
3. Use only a grounded tip soldering iron to solder or unsolder ES devices.
4. Use only an anti-static solder removal device classified as "anti-static" can generate electrical charges sufficient to damage ES devices.
5. Do not use freon-propelled chemicals. These can generate electrical charges sufficient to damage ES devices.
6. Do not remove a replacement ES device from its protective package until immediately before you are ready to install it.
   (most replacement ES devices are package with leads electrically shorted together by conductive foam, aluminum foil or comparable conductive material).
7. Immediately before removing the protective material from the leads of a replacement ES device, touch the protective material to the chassis or circuit assembly into which the device will be installed.
   CAUTION: Be sure no power is applied to the chassis or circuit, and observe all other safety precautions.
8. Minimize bodily motions when handling unpackaged replacement ES devices. (Otherwise hamless motion such as the brushing together of your clothes fabric or the lifting of your foot from a carpeted floor can generate static electricity sufficient to damage an ES device).

## X-RADIATION

**WARNING**
1. The potential source of X-radiation in EVF sets is the High Voltage section and the picture tube.
2. When using a picture tube test jig for service, ensure that jig is capable of handling 10kV without causing X-Radiation.

**Note:** It is important to use an accurate periodically calibrated high voltage meter.

3. Measure the High Voltage. The meter (electric type) reading should indicate 2.5kV, ±0.15kV. If the meter indication is out of tolerance, immediate service and correction is required to prevent the possibility of premature component failure. To prevent an X-Radiation possibility, it is essential to use the specified picture tube.

## IMPORTANT

**"Unauthorized recording of copyrighted television programs, video tapes and other materials may infringe the right of copyright owners and be contrary to copyright laws."**

**CAUTION**

**RISK OF ELECTRIC SHOCK DO NOT OPEN**

CAUTION: TO REDUCE THE RISK OF ELECTRIC SHOCK, DO NOT REMOVE COVER (OR BACK). NO USER SERVICEABLE PARTS INSIDE. REFER TO SERVICING TO QUALIFIED SERVICE PERSONNEL.

The lightning flash with arrowhead symbol, within an equilateral triangle, is intended to alert the user to the presence of uninsulated "dangerous voltage" within the product's enclosure that may be of sufficient magnitude to constitute a risk of electric shock to persons.

The exclamation point within an equilateral triangle is intended to alert the user to the presence of important operating and maintenance (service) instructions in the literature accompanying the appliance.

## WARNING:

**TO REDUCE THE RISK OF FIRE OR SHOCK HAZARD, DO NOT EXPOSE THIS EQUIPMENT TO RAIN OR MOISTURE.**

**TO REDUCE THE RISK OF FIRE OR SHOCK HAZARD, KEEP THIS EQUIPMENT AWAY FROM ALL LIQUIDS-USE AND STORE ONLY IN LOCATIONS WHICH ARE NOT EXPOSED TO THE RISK OF DRIPPING OR SPLASHING LIQUIDS, AND DO NOT PLACE ANY LIQUID CONTAINERS ON TOP OF THE EQUIPMENT.**

## CAUTION:

**TO REDUCE THE RISK OF FIRE OR SHOCK HAZARD AND ANNOYING INTERFERENCE, USE THE RECOMMENDED ACCESSORIES ONLY.**

## CAUTION:

**Do not install or place this unit in a bookcase, built-in cabinet or any other confined space in order to maintain adequate ventilation. Ensure that curtains and any other materials do not obstruct the ventilation to prevent risk of electric shock or fire hazard due to overheating.**

## CAUTION:

**THE AC OUTLET (MAINS SOCKET) SHALL BE INSTALLED NEAR THE EQUIPMENT AND SHALL BE EASILY ACCESSIBLE.**

## CAUTION:

**TO PREVENT ELECTRIC SHOCK, MATCH WIDE BLADE OF PLUG TO WIDE SLOT, FULLY INSERT.**

**FCC Note:**

This equipment has been tested and found to comply with the limits for a class A digital device, pursuant to Part 15 of the FCC Rules. These limits are designed to provide reasonable protection against harmful interference when the equipment is operated in a commercial environment. This equipment generates, uses, and can radiate radio frequency energy and, if not installed and used in accordance with the instruction manual, may cause harmful interference to radio communications. Operation of this equipment in a residential area is likely to cause harmful interference in which case the user will be required to correct the interference at his own expense.

**Warning:**

To assure continued FCC emission limit compliance, the user must use only shielded interface cable when connecting to external units. Also, any unauthorized changes or modifications to this equipment could void the user's authority to operate it.

## CAUTION:

Danger of explosion or fire if battery is mistreated.

- Replace only with same or specified type.
- Do not disassemble or dispose of in fire.
- Do not store in temperatures over 140°F (60°C).
- Use specified charger for rechargeable batteries.
- Do not recharge the battery if it is not a rechargeable type.

**For Remote Controller**

- Replace battery with part No. CR2025 only.
- Do not recharge the battery.

## Notice (U.S.A.only):

**This product has a fluorescent lamp that contains a small amount of mercury.**
**It also contains lead in some components. Disposal of these materials may be regulated in your community due to environmental considerations.**
**For disposal or recycling information please contact your local authorities, or the Electronics Industries Alliance: <http://www.eiae.org.>**

### Camera-Recorder

- The rating plate is on the underside of the Camera-Recorder

### AC Adapter

- The rating plate is on the underside of the AC Adapter.
- Disconnect the AC mains plug from the AC mains socket when not in use.

▭ indicates safety information.

# Caution for AC Mains Lead

**FOR YOUR SAFETY PLEASE READ THE FOLLOWING TEXT CAREFULLY.**
This product is equipped with 2 types of AC mains cable. One is for continental Europe, etc. and the other one is only for U.K.
Appropriate mains cable must be used in each local area, since the other type of mains cable is not suitable.

| FOR CONTINENTAL EUROPE, ETC. | FOR U.K. ONLY |
|---|---|
| Not to be used in the U.K. 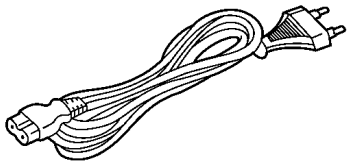 | If the plug supplied is not suitable for your socket outlet, it should be cut off and appropriate one fitted. 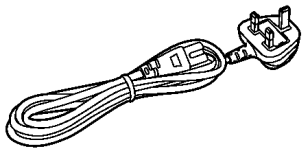 |

## FOR U.K. ONLY

This appliance is supplied with a moulded three pin mains plug for your safety and convenience.
A 5 amp fuse is fitted in this plug.
Should the fuse need to be replaced please ensure that the replacement fuse has a rating of 5 amps and that it is approved by ASTA or BSI to BS1362.
Check for the ASTA mark ⟐ or the BSI mark ♡ on the body of the fuse.

If the plug contains a removable fuse cover you must ensure that it is refitted when the fuse is replaced.
If you lose the fuse cover the plug must not be used until a replacement cover is obtained.
A replacement fuse cover can be purchased from your local Panasonic Dealer.

IF THE FITTED MOULDED PLUG IS UNSUITABLE FOR THE SOCKET OUTLET IN YOUR HOME THEN THE FUSE SHOULD BE REMOVED AND THE PLUG CUT OFF AND DISPOSED OF SAFELY. THERE IS A DANGER OF SEVERE ELECTRICAL SHOCK IF THE CUT OFF PLUG IS INSERTED INTO ANY 13 AMP SOCKET.

If a new plug is to be fitted please observe the wiring code as shown below.
If in any doubt please consult a qualified electrician.

**IMPORTANT:** The wires in this mains lead are coloured in accordance with the following code:

Blue: Neutral
Brown: Live

As the colours of the wires in the mains lead of this appliance may not correspond with the coloured markings identifying the terminals in your plug, proceed as follows:

- The wire which is coloured BLUE must be connected to the terminal in the plug which is marked with the letter N or coloured BLACK.
- The wire which is coloured BROWN must be connected to the terminal in the plug which is marked with the letter L or coloured RED.
- Under no circumstances shoul either of these wires be connected to the terminal in the plug which is marked with the letter E or by the Earth symbol ⏚ .

**How to replace the fuse**

1. Open the fuse compartment with a screwdriver.

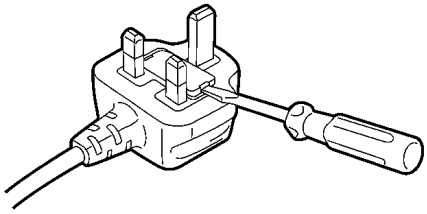

2. Replace the fuse.

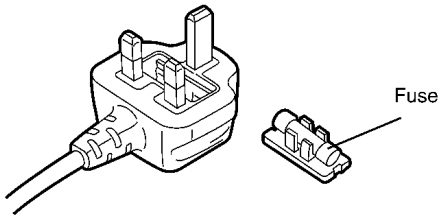


▭ indicates safety information.

## IMPORTANT

**"Unauthorized recording of copyrighted television programmes, video tapes and other materials may infringe the right of copyright owners and be contrary to copyright laws."**

## Operating precaution

Operation near any appliance which generates strong magnetic fields may give rise to noise in the video and audio signals. If this should be the case, deal with the situation by, for instance, moving the source of the magnetic fields away from the unit before operation.

■ **DO NOT REMOVE PANEL COVER BY UNSCREWING.**

To reduce the risk of electric shock, do not remove cover. No user serviceable parts inside. Refer servicing to qualified service personnel.

## WARNING:

**TO REDUCE THE RISK OF FIRE OR SHOCK HAZARD, KEEP THIS EQUIPMENT AWAY FROM ALL LIQUIDS-USE AND STORE ONLY IN LOCATIONS WHICH ARE NOT EXPOSED TO THE RISK OF DRIPPING OR SPLASHING LIQUIDS, AND DO NOT PLACE ANY LIQUID CONTAINERS ON TOP OF THE EQUIPMENT.**

## CAUTION:

**TO REDUCE THE RISK OF FIRE OR SHOCK HAZARD AND ANNOYING INTERFERENCE, USE THE RECOMMENDED ACCESSORIES ONLY.**

## CAUTION:

**Do not install or place this unit in a bookcase, built-in cabinet or any other confined space in order to maintain adequate ventilation. Ensure that curtains and any other materials do not obstruct the ventilation to prevent risk of electric shock or fire hazard due to overheating.**

## CAUTION:

Danger of explosion or fire if battery is mistreated.

- Replace only with same or specified type.
- Do not disassemble or dispose of in fire.
- Do not store in temperatures over 60°C.
- Use specified charger for rechargeable batteries.
- Do not recharge the battery if it is not a rechargeable type.

**For Remote Controller**

- Replace battery with part No. CR2025 only.
- Do not recharge the battery.

### Camera Recorder

- The rating plate is on the underside of the Camera Recorder

### AC Adapter

- The rating plate is on the underside of the AC Adapter.
- Disconnect the AC mains plug from the AC mains socket when not in use.

## CAUTION:

**THE AC OUTLET (MAINS SOCKET) SHALL BE INSTALLED NEAR THE EQUIPMENT AND SHALL BE EASILY ACCESSIBLE.**

▭ indicates safety information.

## Attention/Attentie

- Batteries are used for the main power source, memory back-up in the product and remote controller.
  At the end of their useful life, you should not throw them away.
  Instead, hand them in as small chemical waste.
- Voor de primaire voeding en het reservegeheugen van het apparaat, alsmede voor de afstandsbediening, wordt gebruik gemaakt van een batterij.
  Wanneer de batterij uitgeput is, mag u deze niet gewoon weggooien, maar dient u ze als klein chemisch afval weg te doen.

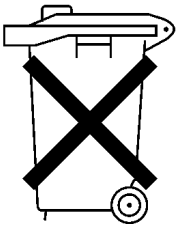

## To remove the battery/ Verwijderen van de batterij

### Main Power Battery
### Batterij Voor Primaire Voeding

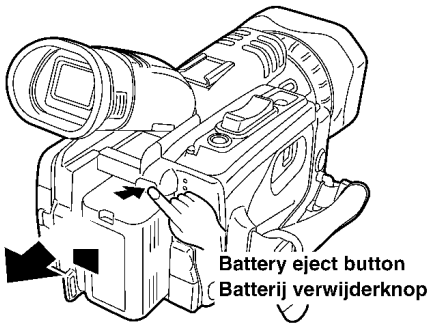

■ **DO NOT REMOVE COVER BY UNSCREWING.**
To reduce the risk of electric shock, do not remove cover. No user serviceable parts inside.
Refer servicing to qualified service personnel.

# WARNING:

**TO REDUCE THE RISK OF FIRE OR SHOCK HAZARD, KEEP THIS EQUIPMENT AWAY FROM ALL LIQUIDS-USE AND STORE ONLY IN LOCATIONS WHICH ARE NOT EXPOSED TO THE RISK OF DRIPPING OR SPLASHING LIQUIDS, AND DO NOT PLACE ANY LIQUID CONTAINERS ON TOP OF THE EQUIPMENT.**

▭ indicates safety information.

Panasonic

FCD0403NMHK141E480

# SECTION 3

# MECHANICAL ADJUSTMENT

## CONTENTS


1. MECHANICAL ADJUSTMENT AND CONFIRMATION ..... MECH-1
   1-1. Name of Tape Transportation ..... MECH-1
   1-2. Tape Path Adjustment Procedure ..... MECH-1
   1-3. Adjustment of S1 & T2 Post ..... MECH-2
   1-4. Confirmation of EVR Tools ..... MECH-2
   1-5. Connection of LISTA Adjustment System ..... MECH-3
   1-6. Boot up the LISTA Software ..... MECH-6
   1-7. How to Enter the Alignment Tape Data ..... MECH-7
   1-8. LISTA Sensitivity Detection ..... MECH-8
   1-9. LISTA Linearity Adjustment ..... MECH-9
   1-10.Tape Path Confirmation ..... MECH-11
   1-11.Self-REC/PLAY Envelope Waveform Confirmation ..... MECH-11
2. MECHANICAL PARTS REPLACEMENT PROCEDURE ..... MECH-12
   2-1. Cleaning Roller Unit ..... MECH-12

# 1. MECHANICAL ADJUSTMENT AND CONFIRMATION

## 1-1. Name of Tape Transportation

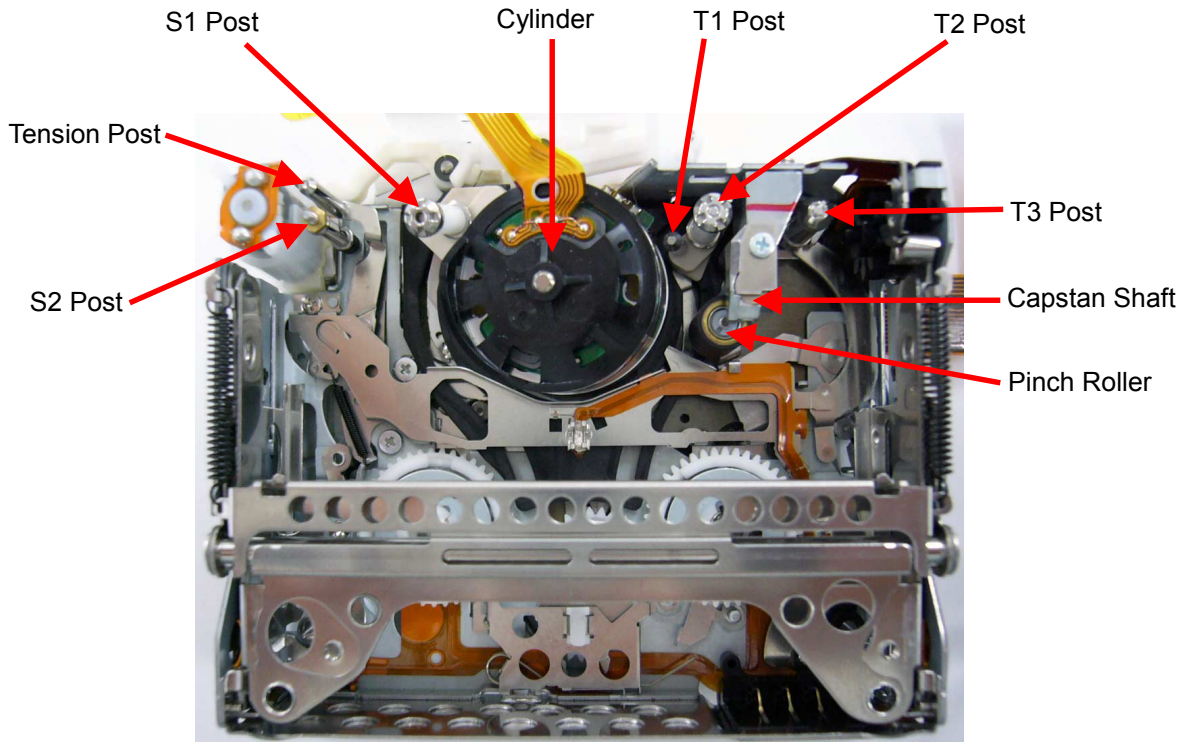


LOADING condition

## 1-2. Tape Path Adjustment Procedure

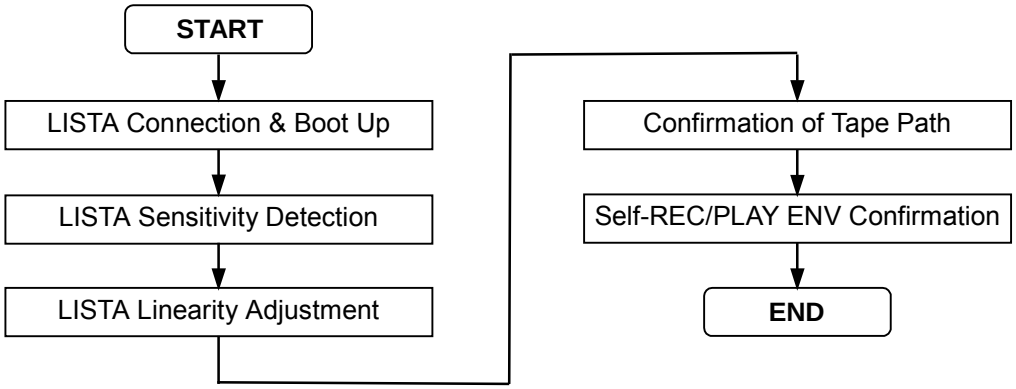

## 1-3. Adjustment of S1 & T2 Post

LISTA linearity and Envelope waveform are adjusted by S1 and T2 post. When removing the Mech. Cover (R) and (L), which is shown in the following figure, without opening a cassette cover, it is possible to do an adjustment.

Mech. Cover (R) side: S1 Post
Mech. Cover (L) side: T2 Post

Mech. Cover (L) Mech. Cover (R)

## 1-4. Connection of EVR Tools

To performing the confirmation of envelope (item “1-11. Self-REC/PLAY Envelope Confirmation”), the following tools are required.

| NAME | Part Number | Pcs. | Remark |
|---|---|---|---|
| Measuring Board | VFK1308P | 1 | |
| EVR Connector Board | VFK1309A | 1 | **NOTE:** VFK1309 also can be use |
| Connection Adapter | VFK1763 | 1 | 60 to 30pin |
| 30pin Flat Cable | VFK1317 | 2 | |
| DC Cable | VJA1128 or LSJA0310 | 1 | For Unit |
| DC Cable | VJA0941 | 1 | For Measuring Board |
| AC Adapter | ----- | 2 | |

To confirm the envelope output, connect the Connection and Measuring Boards as described below.

1. Unscrew 2 screws and remove the EVR cover.

2. Connect the 2 pcs. of 30 pin flat cables (VFK1317) between P101/P102 on the Measuring Board (VFK1308P), and 2 connectors on the EVR Connector Board (VFK1309A). Make sure that the contact surface of 2 pcs. of 30 pin Flat Cables are inner side and direction of the EVR Connector Board is as shown in Figure. Then connect the Connection Adapter (VFK1763).

Connect VFK1763 with VFK1309A as shown in picture.
The unit will not work if the connector is attached backwards.

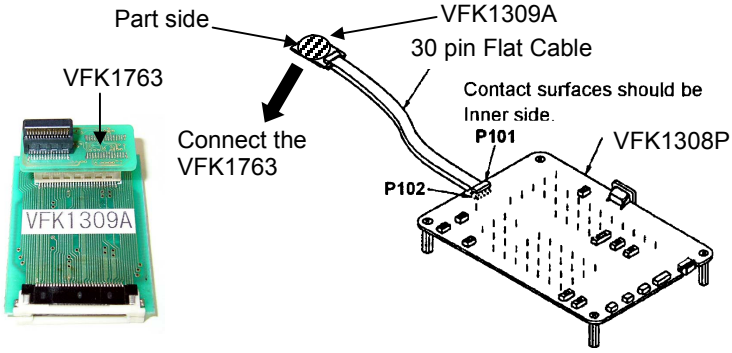

3. Connect the Connection Adapter (VFK1763) to EVR connector in Unit. Then make sure that the direction of the VFK1309A and VFK1763 are correct as shown in Figure.

When the VFK1763 is connected the EVR connector, be careful that VFK1309A is attached in the right direction.

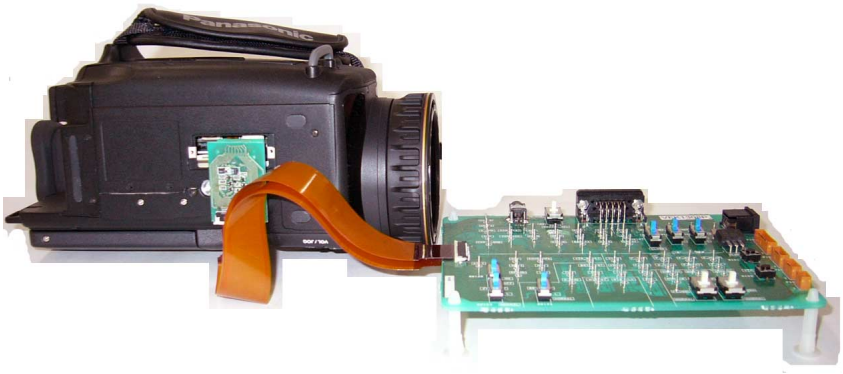

## 1-5. Connection of LISTA Adjustment System

| | |
|---|---|
| **TAPE** | VFM3000EDS (DV LISTA) |
| **M. EQ** | Personal Computer (A/D Board should be installed.) |
| **TOOL** | VFK1481K (LISTA Software), VFK1186 (LISTA Cable), VFK1300 (A/D Converter Board),<br>VFK1308P (Measuring Board), VFK1409A (Measuring Board) ← **NOTE 2**<br>VFK1317 (30P flat cable): 2pcs, VFK1309A (EVR connector board) ← **NOTE 1**<br>VFK1763 (Connection Adapter), VJA0941 (DC cable): 2pcs, 9P RS232C cross cable. |
| **TP** | In case of use VFK1409A<br>**F2** : ATF-ERR (VFK1409A), **TP2** : TRG/HSW (VFK1409A), **GND** : GND (VFK1409A)<br>In case of use VFK1409S<br>**F2** : ATF-ERR (VFK1409S), **TP2** : TRG/HSW (VFK1810), **GND** : GND (VFK1409S) |

**NOTE 1:**
VFK1309 and VFK1309A can be used to perform LISTA adjustment. The VFK1309A is only required for LCD adjustment (refer to item 1 of Electrical adjustment procedure in section 4.)
**NOTE 2:**
If you already have VFK1409S (Measuring board), it can be used to perform LISTA adjustment with VFK1810. Please refer to next explanation for installation of VFK1409S.

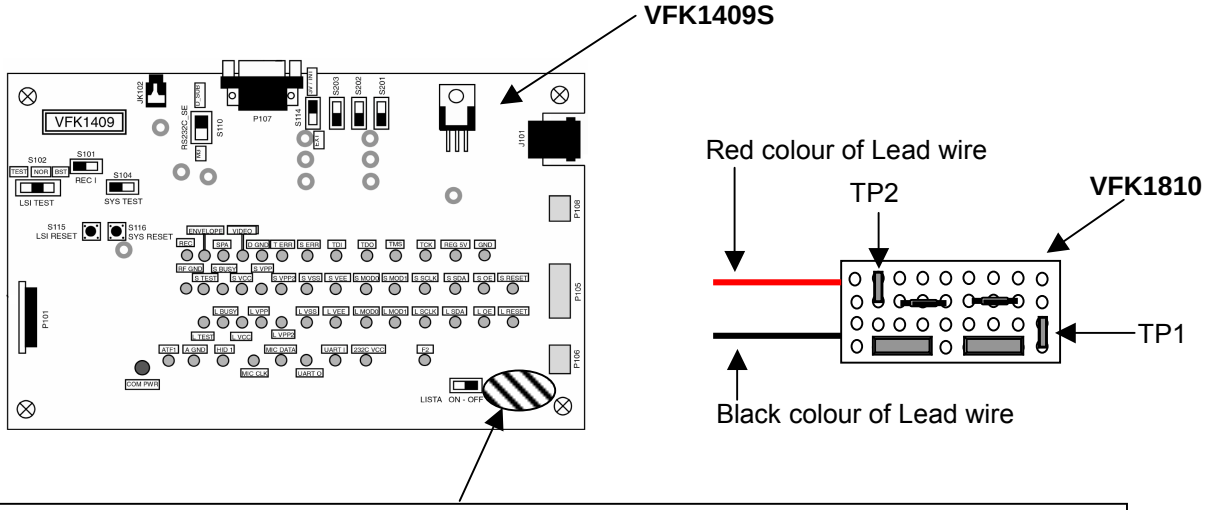


1. Install the two test points of VFK1810 to through hole in this area and solder it at test point at foil side of VFK1409S to fixed VFK1810.

2. Insert the two lead wires of VFK1810 to through hole.

3. Solder the red color of lead wire to pin1 of P108 on foil side on VFK1409S.

4. Solder the black color of lead wire to pin3 of P106 on foil side on VFK1409S.

1. Set the switches on the Measuring Board as shown below.

**<VFK1308P>**

| SW NAME& No. | Setting Position |
|---|---|
| RS232C SEL (SW101) | D-SUB |
| VTR TEST (SW103) | L |
| BST TEST (SW104) | NORMAL |
| SW105 | H |
| SW106 | OFF |
| SW107 | CENTER position |
| SW108 | H |
| FLUSH1 (SW102) | NORMAL |
| FLUSH2 (SW109) | NORMAL |

**<VFK1409S or VFK1409A>**

| SW NAME& No. | Setting Position |
|---|---|
| RS232C SEL (S110) | D-SUB |
| REC I (S101) | NOR |
| LSI TEST (S102) | NOR |
| S104 | NOR |
| S114 | EXT |
| S201 | Right side |
| S202 | Right side |
| S203 | Right side |
| LISTA ON-OFF | ON |

2. Connect a PC, the Measuring Board and the camera recorder as shown below.

## <CONNECTION>

1) In case of use VFK1409A

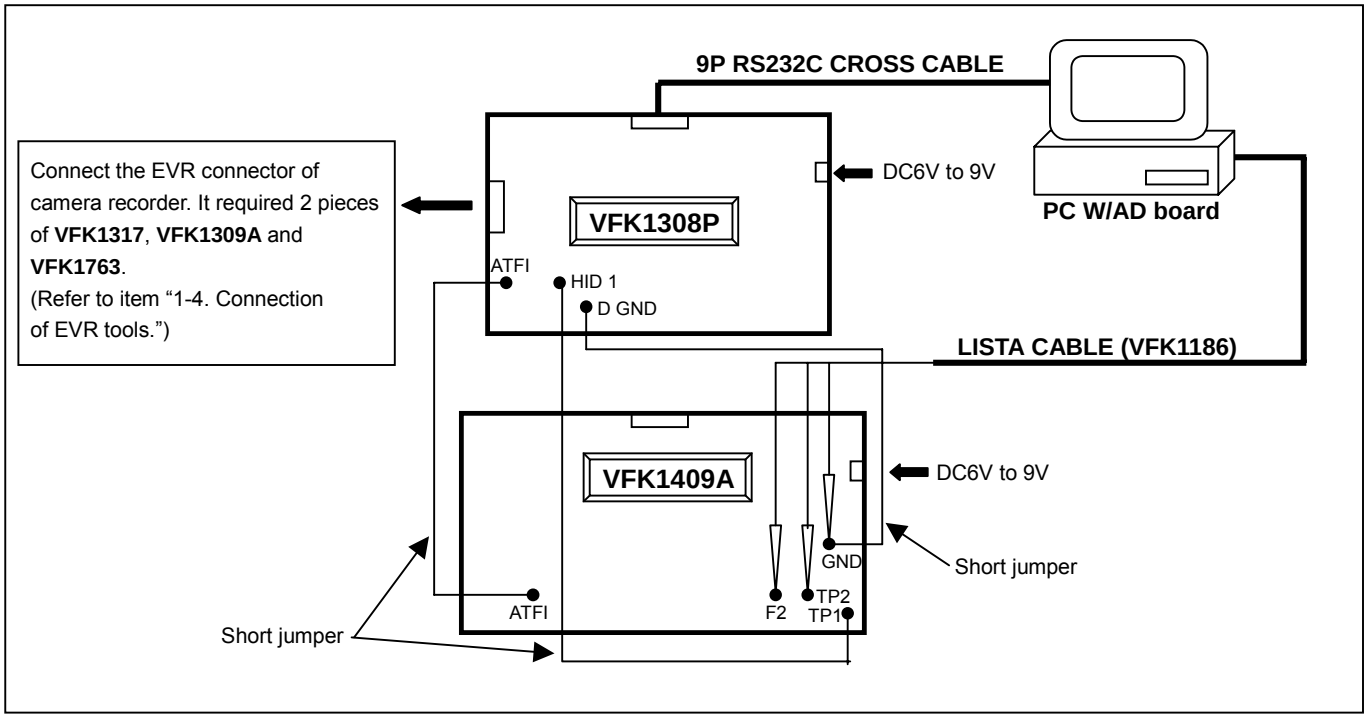


2) In case of use VFK1409S

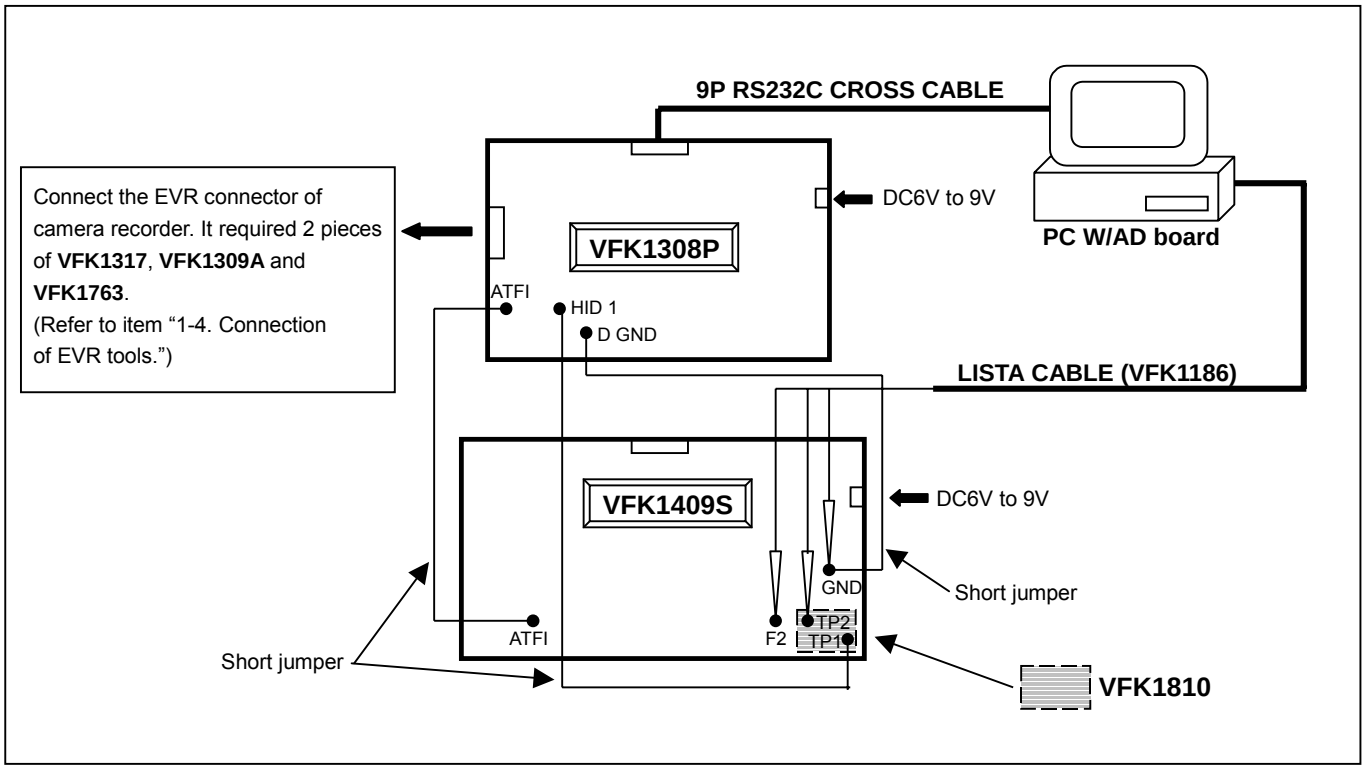


3. Connect the clips of the LISTA cable to test point on the Measuring Board. (Refer to Items **"Sensitivity Detection"** and **"Linearity Adjustment"**.)

# 1-6. Boot up the LISTA Software

1. Boot up the LISTA software on DOS mode.

> **< How to Install and Boot Up >**
> Make a directory like C: LISTA and copy all files in the VFK1481K(LISTA Software) to it on PC.
> Type **"LISTA"** and press **ENTER** key, then boot up the LISTA software VFK1481K.

2. After boot up the LISTA software, **<<< FORMAT SELECT >>>** display appears. Select the item **"DV"**.
   After select the format, **<<< VTR SELECT >>>** display appears, and select the model **"AG-DVC200"**.

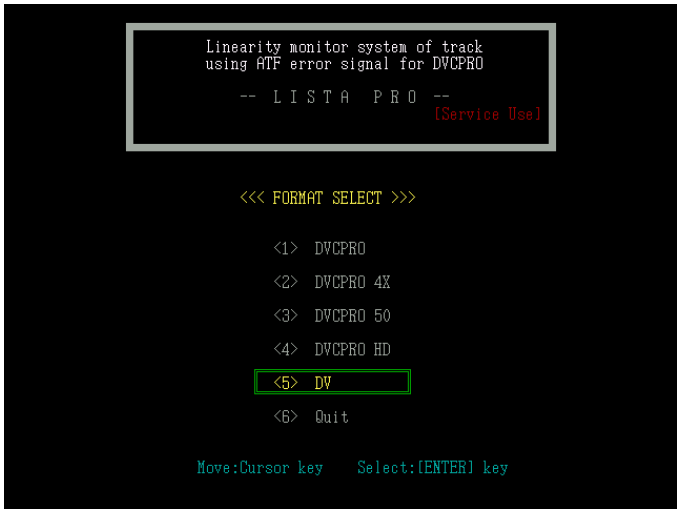

3. Next, select the Serial number of the Alignment tape on the screen. In case of LISTA software is not entered with data of alignment tape, press the ESC key, then main menu is displayed on the screen. And select the item **"<4> Alignment Tape"** for entry the data on the attachment sheet, which is enclosed with alignment tape.
4. In case of LISTA software has entered data of alignment tape, select the serial number of Alignment tape, then message appears **"ok? (y/n)"** on the screen. And press **" Y "** or **" ENTER "** key, then LISTA main menu is displayed on screen.

**< In case of Alignment Tape entered already >**

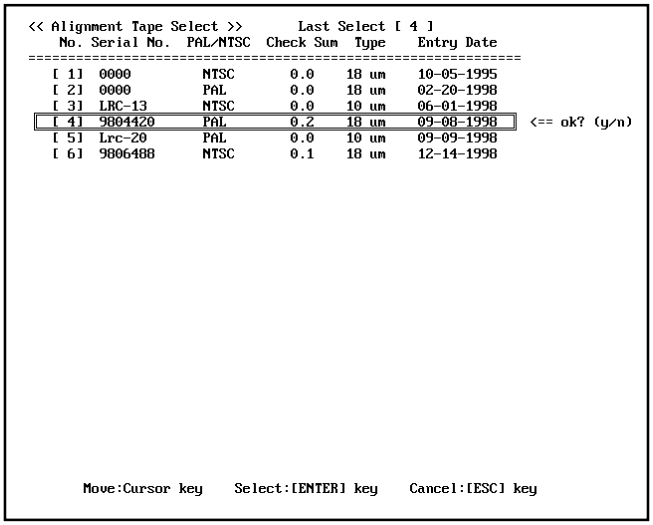


**< In case of Alignment Tape does not entered >**

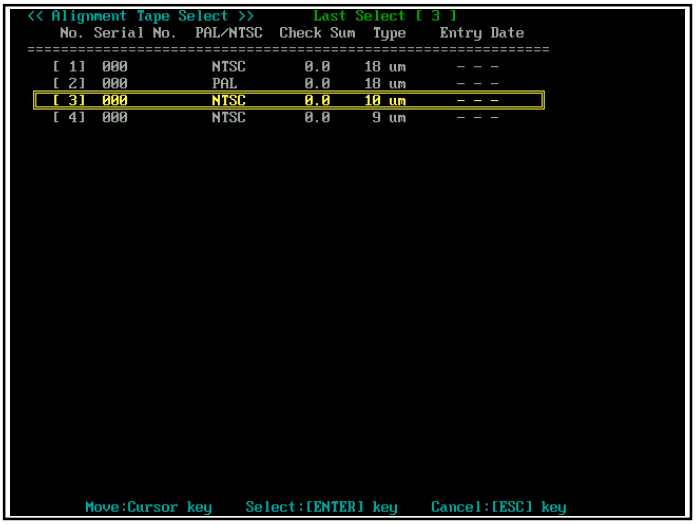

## 1-7. How to Enter the Alignment Tape Data

1. Select the item **"<4> Alignment Tape"** on the LISTA main menu.
2. Select the item **"<2> ENTRY"** on the alignment menu.
3. After the screen displays the screen of **<<Alignment Tape Data Entry>>**, first input the Serial Number follow the printed number on the tape label. And input the number **"0"** or **"1"** for selected the PAL/NTSC. And after that enter the tape type, input **"0"** for DVCPRO, input **"1"** for DV or input **"2"** for HDLP.
4. After selecting the tape type, the frame for inputting the DATA and CHECK SUM appears on the screen. Input the numerical value in numerical order on the data sheet, which is enclosed with alignment tape. If the wrong number is inputted, the error message on the screen, then confirm that data on the sheet.
5. After the data entry, the screen returns to **"LISTA MAIN"** menu. Confirm the serial number of the alignment tape.

**<< Alignment Tape Data Entry >>** **Serial No. Lrc-20 (NTSC) 10μm**

| | |
|---|---|
| **[1]** | - 0.1 |
| **[2]** | 0.1 |
| **[3]** | 0.0 |
| **[4]** | 0.2 |
| **[5]** | 0.6 |
| **[6]** | 0.5 |
| **[7]** | 0.7 |
| **[8]** | 0.9 |
| **[9]** | 1.0 |
| **[10]** | 0.8 |

| | |
|---|---|
| **[11]** | 0.7 |
| **[12]** | 1.0 |
| **[13]** | 0.7 |
| **[14]** | 0.5 |
| **[15]** | 0.2 |
| **[16]** | - 0.5 |
| **[17]** | - 0.3 |
| **[18]** | - 0.3 |
| **[19]** | - 0.1 |
| **[20]** | - 0.6 |

| | |
|---|---|
| **[21]** | - 0.4 |
| **[22]** | - 0.2 |
| **[23]** | - 0.7 |
| **[24]** | - 0.6 |
| **[25]** | - 0.7 |
| **[26]** | - 0.3 |
| **[27]** | - 0.4 |
| **[28]** | - 0.4 |
| **[29]** | - 0.6 |
| **[30]** | - 0.3 |

| | |
|---|---|
| **[31]** | - 0.4 |
| **[32]** | - 0.6 |
| **[33]** | - 0.3 |
| **[34]** | - 0.2 |
| **[35]** | - 0.1 |
| **[36]** | - 0.3 |
| **[37]** | - 0.1 |

| | |
|---|---|
| **[CS]** | - 0.6 |

**NOTE:** This is sample only, you must enter information from your alignment tape. Each tape is different.

# 1-8. LISTA Sensitivity Detection

| | |
|---|---|
| **TP** | In case of use VFK1409A<br>**F2** : ATF-ERR (VFK1409A), **TP2** : TRG/HSW (VFK1409A), **GND** : GND (VFK1409A)<br>In case of use VFK1409S<br>**F2** : ATF-ERR (VFK1409S), **TP2** : TRG/HSW (VFK1810), **GND** : GND (VFK1409S) |
| **VTR MODE** | PLAY |
| **ADJ. MODE** | Refer to below explanation |
| **TAPE** | VFM3000EDS (DV LISTA) |
| **SPEC.** | 40 mV / µm to 120 mV / µm |

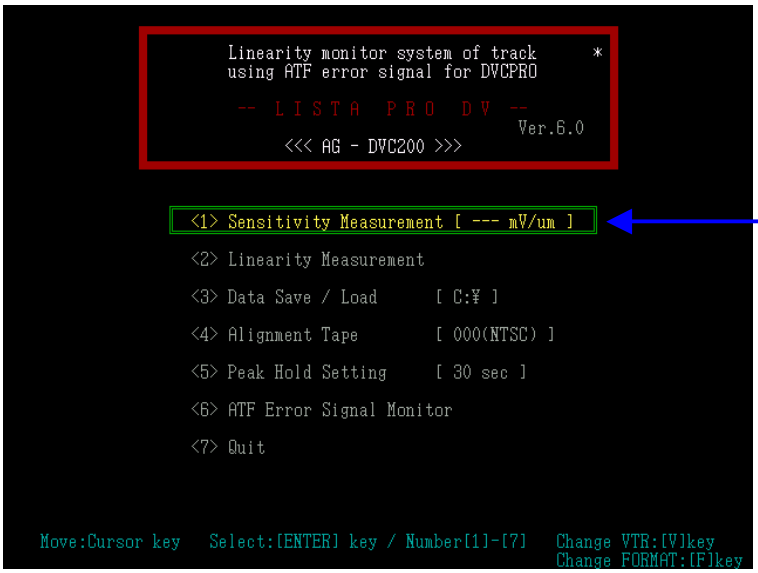


Select at Sensitivity Detection.

1. Set the camera recorder to VCR mode.
2. Insert the DV Alignment Tape (VFM3000EDS) to the camera recorder.
3. Press the MENU button to open the **"VCR FUNCTION MENU"**.
4. Open the **"8. ADJUST MENU"** in **"VCR FUNCTION MENU"**.
5. Select the item **"ATF GAIN"** and press the MULTI-DIAL.
6. Message **"NOW SERVO ADJUST PUSH MENU TO RETURN"** appears on screen and press the PLAY button to playback the tape.
7. Press MENU button to return to **"ADJUST MENU"** screen.
8. Select item **"<1> Sensitivity Measurement"** on the LISTA main menu, and press **"ENTER"**.
9. Then the tape is played back (tape speed : 101.2%) automatically, and message **"1.2% Speed…"** appears on the screen.
10. Press the ENTER key, and then start measurement of the sensitivity value.
11. Confirm that the sensitivity value is with in specification, after the message **"<<Sensitivity Measurement Finish>>"**.

<<Sensitivity Measurement Finish>>

| | |
|---|---|
| **Sensitivity** | **72.95 (mV/um)** |
| Sens.1 | 85.43 (mV/um) |
| Sens.1 | 85.48 (mV/um) |

Confirm that the value of Sens.Value1 and Sens.Value2 in specification

## 1-9. LISTA Linearity Adjustment

| | |
|---|---|
| **TP** | In case of use VFK1409A<br>**F2** : ATF-ERR (VFK1409A), **TP2** : TRG/HSW (VFK1409A), **GND** : GND (VFK1409A)<br>In case of use VFK1409S<br>**F2** : ATF-ERR (VFK1409S), **TP2** : TRG/HSW (VFK1810), **GND** : GND (VFK1409S) |
| **ADJ.** | S1 and T1 Post Height |
| **VTR MODE** | PLAY |
| **ADJ. MODE** | Refer to below explanation |
| **TAPE** | VFM3000EDS (DV LISTA) |
| **TOOL** | VFK1899 : Post Driver |
| **SPEC.** | Linearity : less than 3µm |

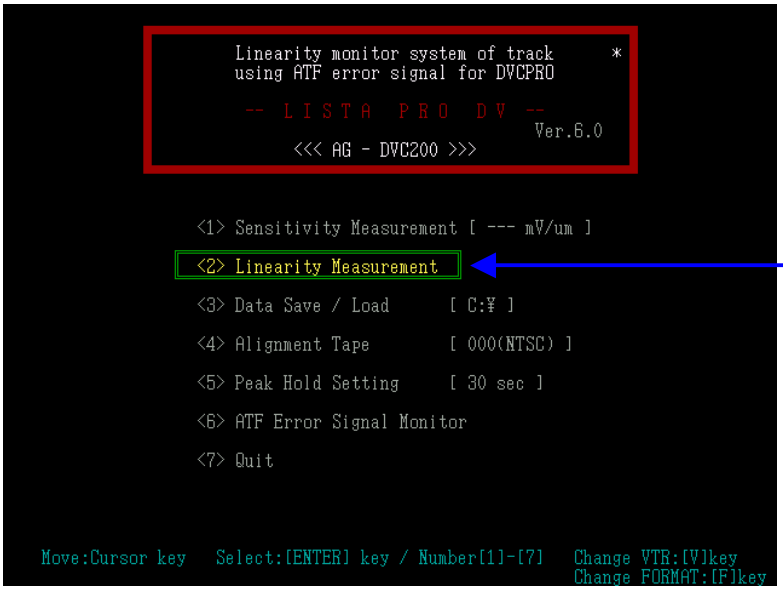


Select at Linearity Measurement.

1. Set the camera recorder to VCR mode.
2. Insert the DV Alignment Tape (VFM3000EDS) to the camera recorder.
3. Press the MENU button to open the **"VCR FUNCTION MENU"**.
4. Open the **"8. ADJUST MENU"** in **"VCR FUNCTION MENU"**.
5. Select the item **"LINEARITY"** and press the MULTI-DIAL.
6. Message **"NOW SERVO ADJUST PUSH MENU TO RETURN"** is appears on screen and press the PLAY button to playback the tape.
7. Press MENU button to return to **"ADJUST MENU"** screen.
8. Select item **"<2> Linearity Measurement"** on the LISTA main menu, and press **"ENTER"**, then the Linearity Waveform appears.
9. When the waveform as shown in figure below is displayed on the screen, press the **"BS (Back Space)"** key for display the waveform positioned at the center of the scale on screen. Adjust S1 and T1 post height by using the post driver so that the linearity waveform is becomes flat as possible, and it should be within specification.
   (Adjust linearity waveform in the red dot line on the screen.)

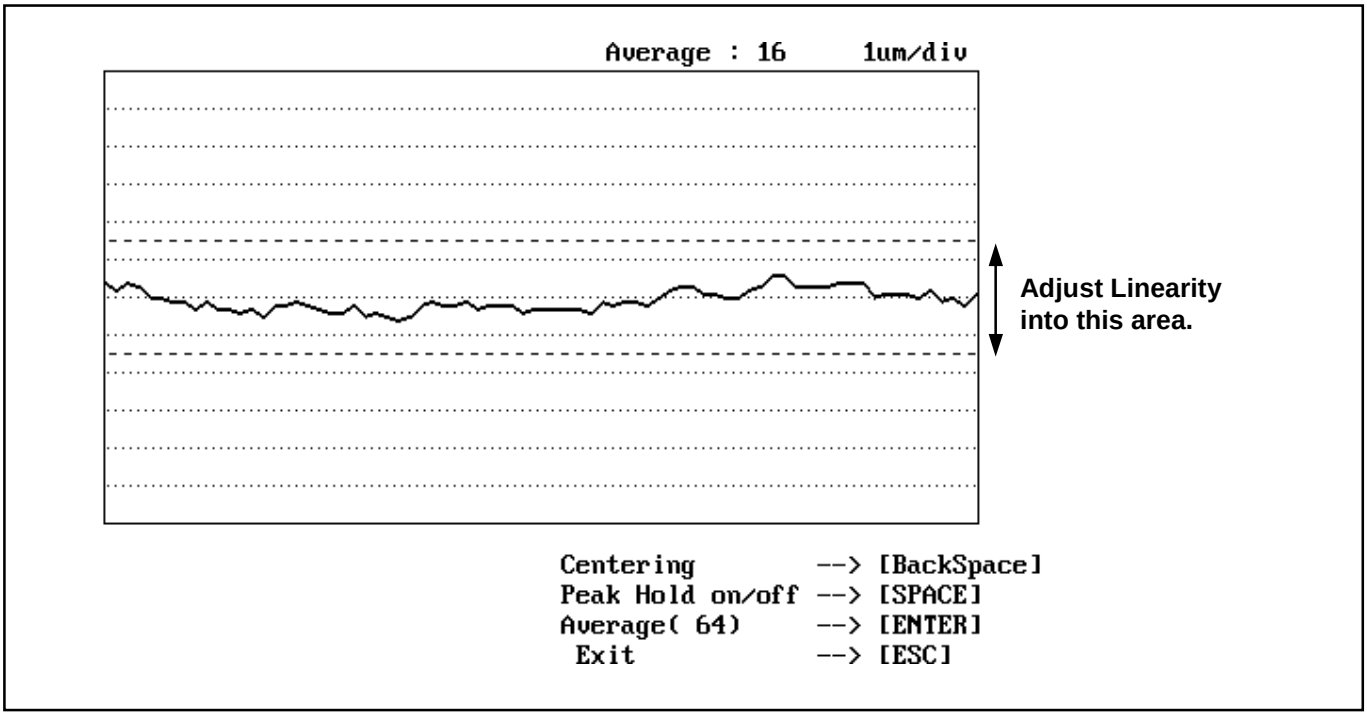


**POINT :**
The left side of the waveform (entrance side) is adjusted by the height of S1 post and the right side of the waveform (exit side) is adjusted by the height of T2 post.
When the post driver is removed from upper part of post, linearity waveform is changed.
After finishing this adjustment, eject the tape and insert the tape again to confirm that the shape of the linearity waveform has not changed.

10. Press **"SPACE"** key to perform the Peak Hold in 30 seconds when linearity is displayed.
11. After finishing the Peak Hold, press **"SHIFT"** and **" } "** key simultaneously on the Key Board, then the numerical values of **"Linearity"** and **"Waving"** is displayed on left lower portion of screen. And confirm the numerical value of **"Linearity"** is in the specification. If the **"Linearity"** is out of specification, adjust height of S1 and T1 post.
12. After this measurement is finished, press the ESC key to return to the main menu.

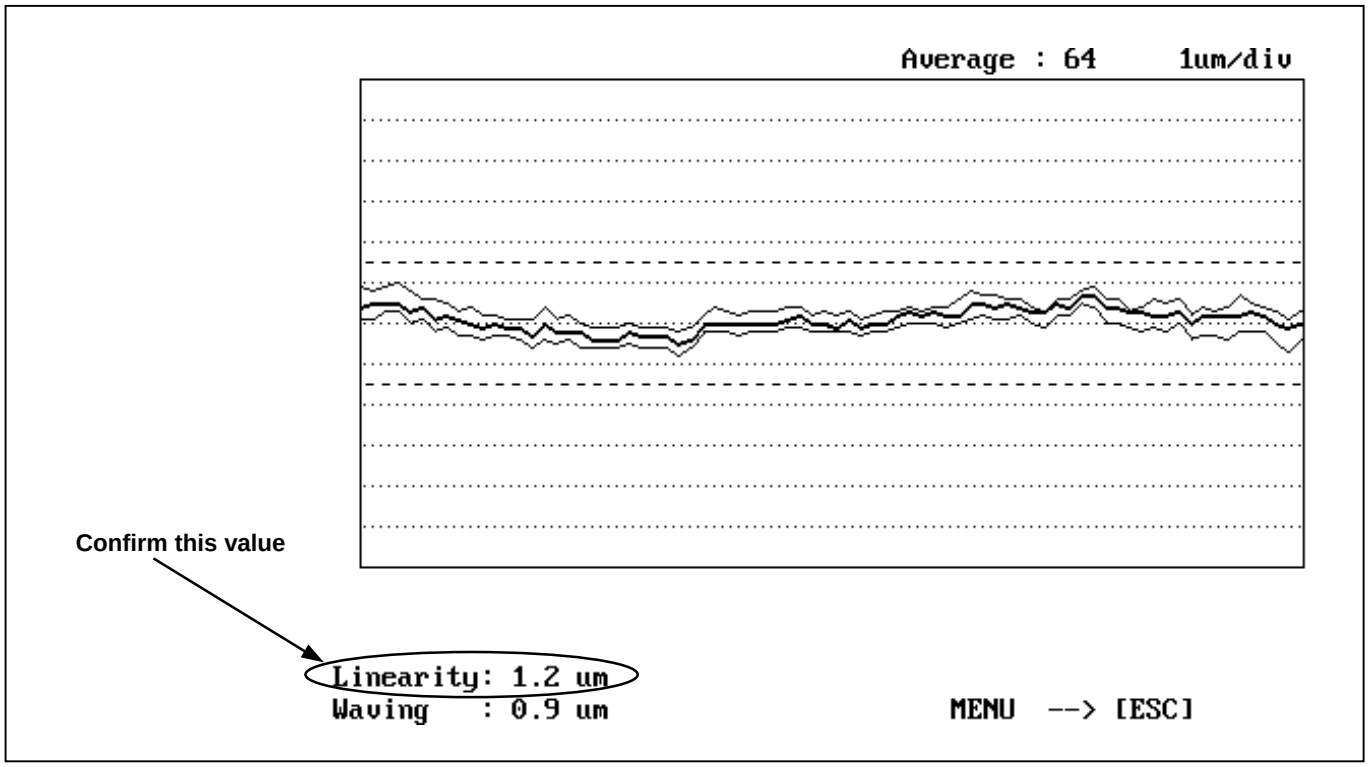

## 1-10. Tape Pass Confirmation

1. Play back the Blank tape and confirm that the tape passes without curling at the upper and lower guides of the following posts in the Play modes as shown in below table.

**NOTE:** The tape pass can not be confirm when the mechanism unit is install in unit. Connect the mechanism unit by the extender cable and confirmed.

| Post Name | Tape limit (refer to figure) | | | | | |
|---|---|---|---|---|---|---|
| | A | B | C | D | E | F |
| S1 post | NG | NG | OK | NG | NG | NG |
| S2 post | OK | OK | NG | NG | NG | NG |
| T2 post | OK | NG | NG | NG | NG | NG |
| T3 post | NG | OK | OK | NG | NG | NG |

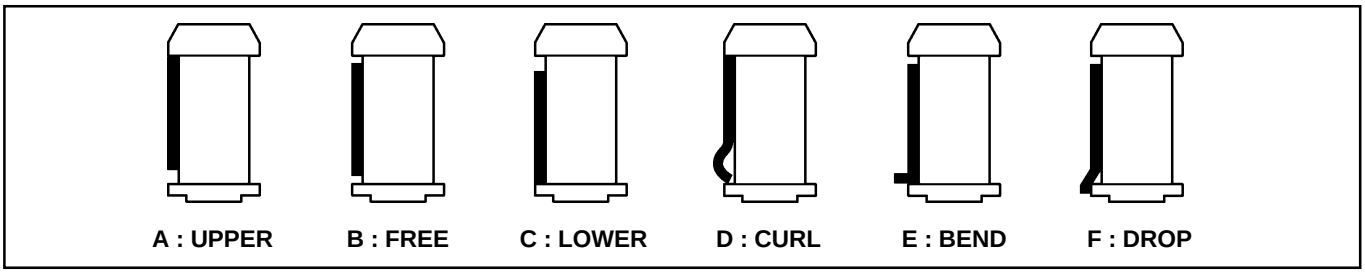


2. Confirm that the tape damage does not occur on tape at S1, T1 and T2 post by loading and unloading.
3. If curl and tape damage occurred at S1 and T2 post, adjust height of post by post driver.

## 1-11. Self-REC/PLAY Envelope Waveform Confirmation

1. Connect the EVR tools (refer to item ”1-4. Connection of EVR Tools”).
2. Connect the oscilloscope to the Measuring Points [ENVELOPE] and [HID] as a trigger on the Measuring Board (VFK1308P).
3. Record a color bar signal.
4. Play back the just recorded portion and confirm that the envelope is within the following specifications.

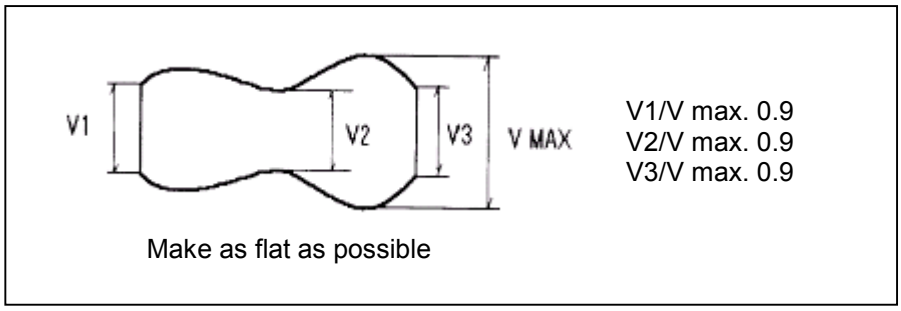


5. Confirm that the envelope is within the following specification, when the mode is changed as follows.
   STOP→PLAY: Envelope appears completely within 2 seconds and stable.
   REV→PLAY : Envelope appears completely within 2 seconds.
6. Confirm that the shape of envelope is diamond style.
7. If it is out of the specification, adjust height of the S1 and T2 Post.

# 2. MECHANICAL PARTS REPLACEMENT PROCEDURE

## 2-1. Cleaning Roller Unit

**(Removal)**

1. Remove the Mechanism Unit.
2. Unhook the hooking portion (C) of Cleaning Roller Unit to remove fixed Flexible cable.
3. Unscrew the 2 screws (A) and (B), then remove the Cleaning Roller Unit.

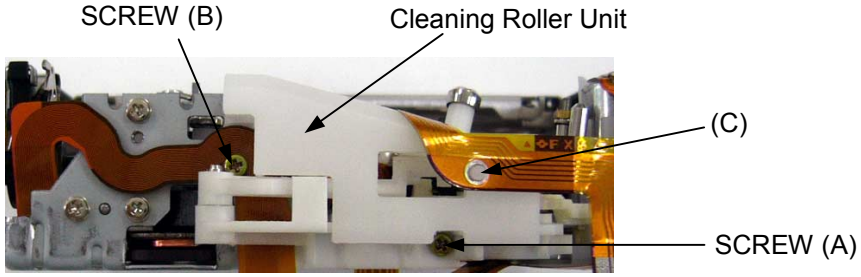


Figure A

**(Installation)**

1. Hook the portion (B) of Cleaning Roller Unit to portion (A) of Mechanism Chassis and install the Cleaning Roller Unit. Then be careful the Release Arm does not run onto the part at end of sub chassis (C) as shown in figure B.

**NOTE:** Supply the voltage to loading motor and the Cleaning Roller Unit is installed in the mechanical position as shown in figure (B) to simple installation (No problem it installation in loading complete position).

2. Tighten the Screw (A) and (B) as shown in figure A. When tighten the screw (B), flexible cable also tighten up together as shown in figure A.
3. The projection (C) of Cleaning Roller Unit should be matched to the hole of the flexible cable as shown in figure A.

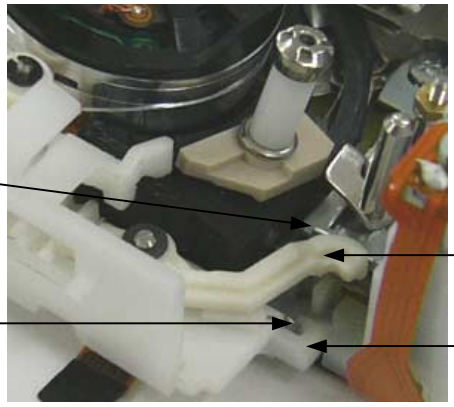


Figure B

**(Confirmation of Operation)**

1. To confirm that the Cleaning Roller operates normally on the Mechanism Unit, supply the voltage to loading motor and confirm that the Cleaning Roller touches the Cylinder in loading operation.
2. To confirm that the Cleaning Roller operates normally after the Mechanism Unit is installed to Unit, remove the Mech. Cover (R) on Cassette Cover to confirm the Cleaning Roller in window as shown in figure (C). Insert the cassette tape to Unit and confirm that the Cleaning Roller touches the Cylinder in loading operation.

Figure C

# SECTION 4

# ELECTRICAL ADJUSTMENT

## CONTENTS


1. ADJUSTMENT SYSTEM ..... ELE-1
   1-1. Modification procedure of VFK1309 ..... ELE-1
   1-2. Connection ..... ELE-1
   1-3. System Hook up Procedures ..... ELE-2
2. REQUIRED TOOL & EQUIPMENT FOR ELECTRICAL ADJUSTMENT ..... ELE-4
3. PC EVR (ADJUSTMENT) SOFTWARE ..... ELE-5
   3-1. BOOT UP THE ADJUSTMENT SOFTWARE ..... ELE-5
   3-2. How to Use the Main Menu ..... ELE-8
   3-3. Introduction of the Sub Menu ..... ELE-9
4. EEPROM ..... ELE-11
   4-1. How to Save Camera Adjustment Data ..... ELE-11
   4-2. How to Save VTR Adjustment Data ..... ELE-12
   4-3. REWRITE Adjustment Data ..... ELE-13
      4-3-1. How to Rewrite Adjustment data on Camera C.B.A. ..... ELE-13
      4-3-2. How to Rewrite Adjustment data on VTR C.B.A. ..... ELE-13
   4-4. How to change the EEPROM Data. ..... ELE-13
      4-4-1. How to change the CAMERA EEPROM data ..... ELE-13
      4-4-2. How to change the VTR EEPROM data. ..... ELE-15
5. ZOOM SW Center Value Adjustment ..... ELE-16
6. CAMERA ADJUSTMENT PROCEDURE ..... ELE-18
   6-1. Iris Hall Amp Adjustment (AUTO) ..... ELE-18
   6-2. Iris PWM Bias Adjustment (AUTO) ..... ELE-19
   6-3. ND Hall Amp Adjustment (AUTO) ..... ELE-20
   6-4. ND PWM Bias Adjustment (AUTO) ..... ELE-21
   6-5. OISu Adjustment (AUTO) ..... ELE-22
   6-6. Zoom Tracking Adjustment (AUTO) ..... ELE-23
   6-7. CCD white scratch damage revision Adjustment (AUTO) ..... ELE-25
   6-8. White Balance Adjustment (AUTO) ..... ELE-26
      6-8-1. Indoor (3100K) White Balance Adjustment (AUTO) ..... ELE-26
      6-8-2. Outdoor (5100K) White Balance Adjustment (AUTO) ..... ELE-27
      6-8-3. Cool white (4500K) White Balance Adjustment (AUTO) ..... ELE-29
      6-8-4. Warm white (3600K) White Balance Adjustment (AUTO) ..... ELE-31
   6-9. White Shading Adjustment ..... ELE-33
7. VTR ADJUSTMENT PROCEDURE ..... ELE-35
   7-1. Sensitivity adj of Tape sensors Adjustment (AUTO) ..... ELE-35
   7-2. PG shifter Adjustment (AUTO) ..... ELE-36
   7-3. Luminance level Adjustment ..... ELE-38
   7-4. Chroma level Adjustment ..... ELE-38
8. LCD ADJUSTMENT PROCEDURE ..... ELE-39
   8-1. PLL Adjustment ..... ELE-39
   8-2. Pedestal Level Adjustment ..... ELE-39
   8-3. Contrast Adjustment ..... ELE-40
   8-4. Sub contrast Adjustment ..... ELE-41
   8-5. White balance Adjustment ..... ELE-42
9. EVF ADJUSTMENT PROCEDURE ..... ELE-43
   9-1. EVF PLL Adjustment ..... ELE-43
   9-2. EVF Contrast Adjustment ..... ELE-43
   9-3. EVF Pedestal Level Adjustment ..... ELE-44
   9-4. EVF Sub contrast Adjustment ..... ELE-45
   9-5. EVF White balance Adjustment ..... ELE-46

# ELECTRICAL ADJUSTMENT PROCEDURE

## 1. ADJUSTMENT SYSTEM

When performing the electrical adjustment, the following tools are required.

| NAME | Part Number | Pcs. | Remark |
|---|---|---|---|
| Measuring Board | VFK1308P | 1 | |
| EVR Connector Board | VFK1309A | 1 | NOTE |
| Connector Adapter | VFK1763 | 1 | 60 to 30pin |
| 30pin Flat Cable | VFK1317 | 2 | |
| DC Cable | VJA0941 | 1 | |
| DC Cable | VJA1128 or LSJ0310 | 1 | |
| 9pin RS232C cross cable | --- | 1 | |
| AC Adapter | --- | 1 | |
| Personal Computer | --- | 1 | |

**NOTE:**
1. VFK1309 can be used for this adjustment system except LCD adjustment.
2. If you have VFK1309, it can be modified to VFK1309A as following specification.

### 1-1. Modification procedure of VFK1309

1. Delete 2 pieces of resistor as shown in figure.
2. Short between emitter and base of 2 pieces of transistor as shown in figure.

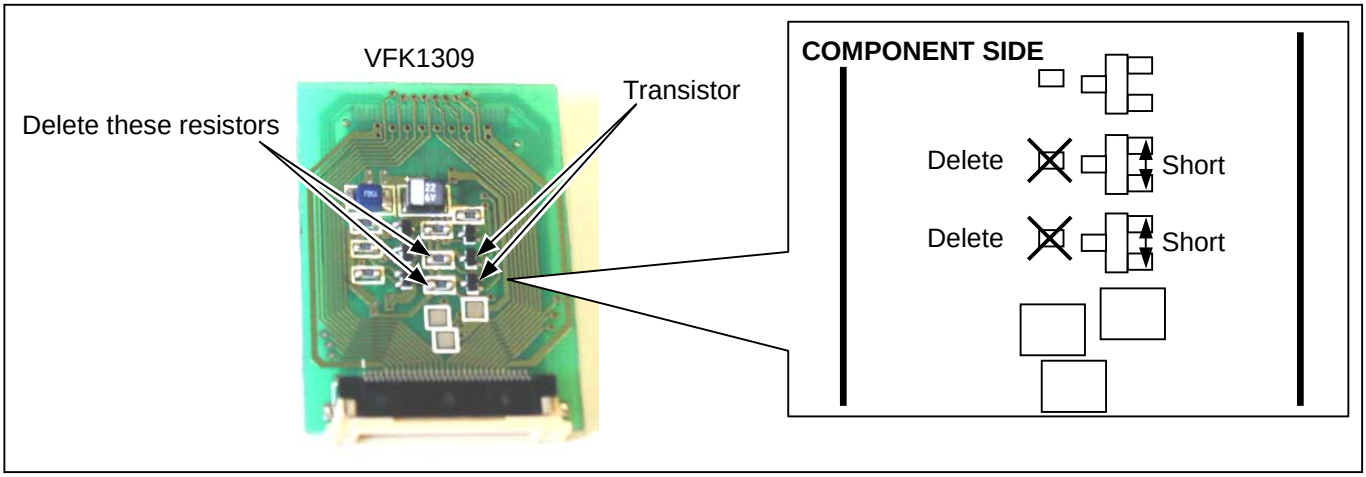


### 1-2. Connection

Please refer to next item 1-3 as detail explanation.

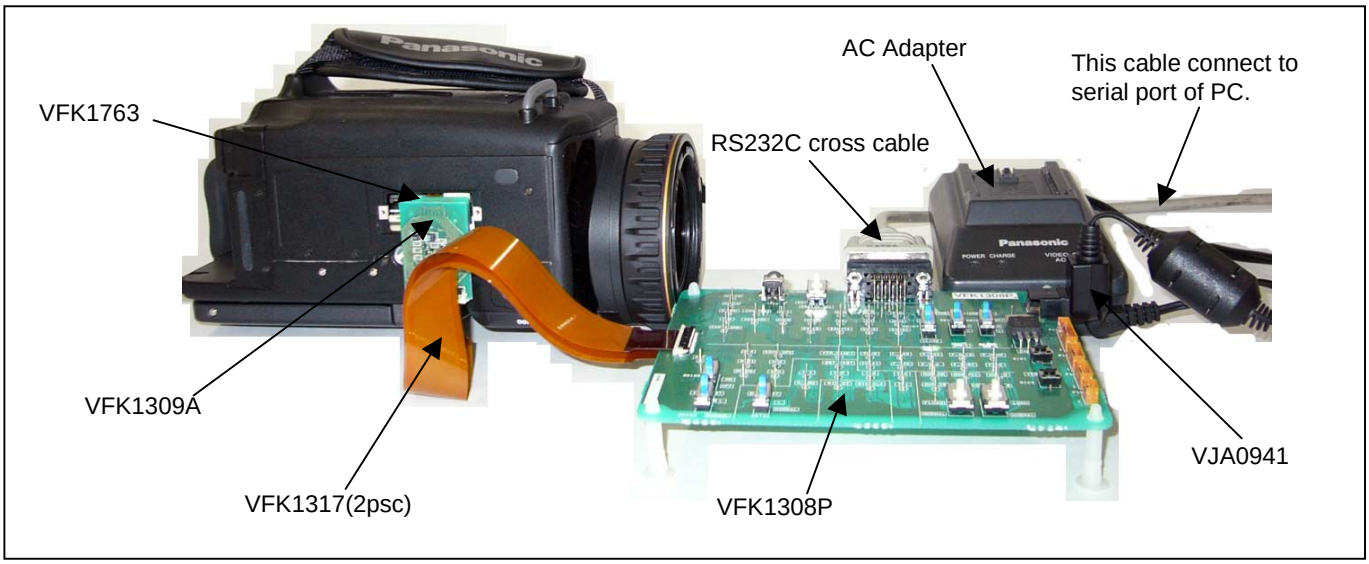

## 1-3. System Hook up Procedures

1. Unscrew the 2 screws and remove the EVR cover.

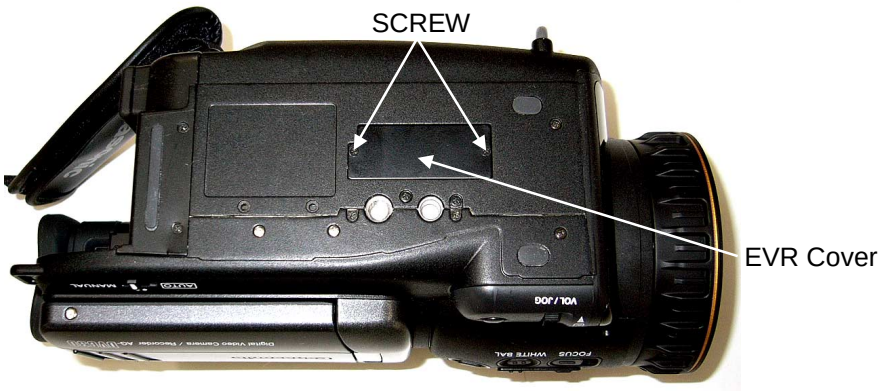


2. Connect the 2 pcs. of 30 pin flat cables (VFK1317) between P101/P102 on the Measuring Board (VFK1308P), and 2 connectors on the EVR Connector Board (VFK1309A). Make sure that the contact surface of 2 pcs. of 30 pin Flat Cables are inner side and direction of the EVR Connector Board is as shown in Figures. Then connect the Connection Adapter (VFK1763).

Connect VFK1763 with VFK1309A as shown in picture.
If the connector is installed backwards, it will not work.

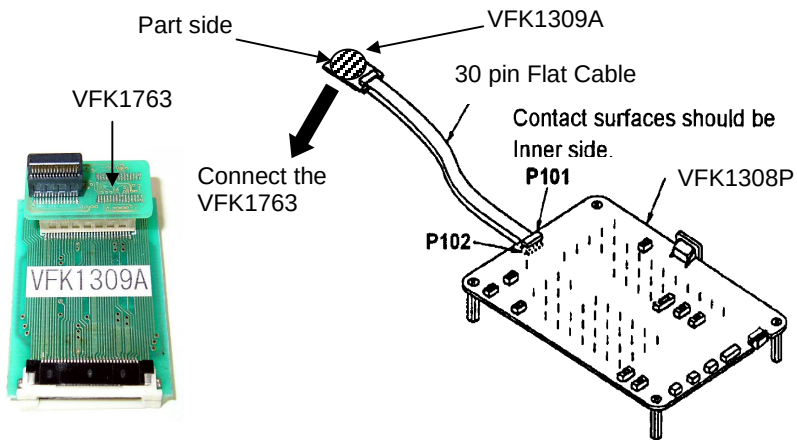

3. Connect the Connection Adapter (VFK1763) to EVR connector in camera recorder. Then make sure that the direction of the VFK1309A and VFK1763 are correct as shown in Figure.

When connecting VFK1763 to the EVR connector, be careful that it is installed in the correct direction. Please follow as shown in the figure.

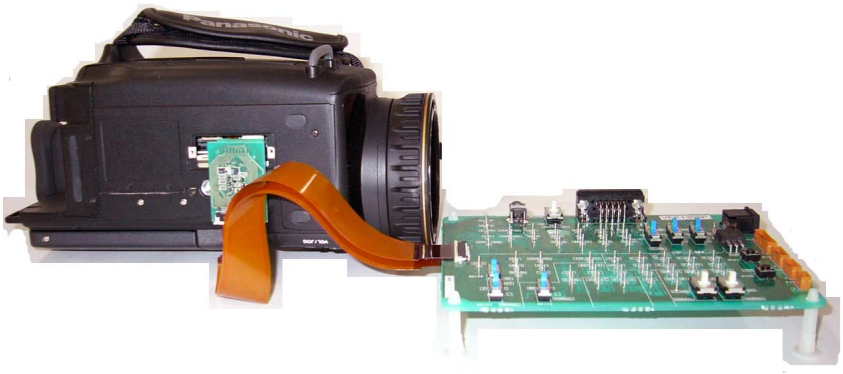

4. Supply DC6V-9V to the Measuring Board (VFK1308P). Please use the DC cable (VJA0941) and AC Adapter to supply DC voltage to Measuring Board.
5. Connect a 9 pin RS-232C cross cable between the Measuring Board and RS-232C connector on Personal Computer as shown in Figure.
6. Unless otherwise specified on the message of the EVR software or this adjustment procedure, set the switches on the Measuring Board as shown in the table below.

| NAME | SETTING POSITION |
|---|---|
| RS232C SEL (SW101) | D-SUB |
| VTR TEST (SW103) | NORMAL |
| BST TEST (SW104) | NORMAL |
| SW107 | CENTER position |
| SW108 | H |
| SW105 | H |
| SW106 | OFF |
| FLUSH1 (SW102) | NORMAL |
| FLUSH2 (SW109) | NORMAL |

## 2. REQUIRED TOOL & EQUIPMENT FOR ELECTRICAL ADJUSTMENT

Below indicated tools are required to perform each adjustment in addition to tools in introduced in item1.

| Adjustment | Item | Required Tool | Remark |
|---|---|---|---|
| Camera | Zoom SW center value adjustment | Unnecessary | **NOTE** |
| | Iris Hall Amp (Auto) | Unnecessary | |
| | Iris PWM Bias (Auto) | Unnecessary | |
| | ND Hall Amp (Auto) | Unnecessary | |
| | ND PWM Bias (Auto) | Unnecessary | |
| | OIS (Auto) | Unnecessary | |
| | Zoom Tracking (Auto) | 43mm Attachment Ring (VFK1164TAR43) | |
| | | Collimator Set (VFK1164TCM01) | |
| | CCD White scratch damage revision (Auto) | Unnecessary | |
| | White Balance (3100K) | Halogen lamp & Grayscale chart | |
| | | Color Pyrometer & Lux Meter | |
| | White Balance (5100K) | CC filter (LB120) (VFK1347) | |
| | | CC filter (LBA2) (VFK1884) | |
| | | CC filter (LBB6) (VFK1888) | |
| | | CC Filter Holder (VFK1345) | |
| | | Step-down Ring (62mm-52mm) (VFK1346) | |
| | | Step-up Ring (43mm-49mm) (VFK1659) | |
| | | Step-up Ring (49mm-62mm) (VFK1660) | |
| | | Halogen lamp & Grayscale chart | |
| | | Color Pyrometer & Lux Meter | |
| | White Balance (4500K) | CC filter (LB120) (VFK1347) | NTSC model only |
| | | CC filter (LB80) (VFK1342) | PAL model only |
| | | CC filter (CC C20) (VFK1887) | PAL model only |
| | | CC Filter Holder (VFK1345) | |
| | | Step-down Ring (62mm-52mm) (VFK1346) | |
| | | Step-up Ring (43mm-49mm) (VFK1659) | |
| | | Step-up Ring (49mm-62mm) (VFK1660) | |
| | | Halogen lamp & Grayscale chart | |
| | | Color Pyrometer & Lux Meter | |
| | White Balance (3600K) | CC filter (LB40) (VFK1341) | NTSC model only |
| | | CC filter (LBB2) (VFK1885) | NTSC model only |
| | | CC filter (CC C10) (VFK1886) | PAL model only |
| | | CC Filter Holder (VFK1345) | |
| | | Step-down Ring (62mm-52mm) (VFK1346) | |
| | | Step-up Ring (43mm-49mm) (VFK1659) | |
| | | Step-up Ring (49mm-62mm) (VFK1660) | |
| | | Halogen lamp & Grayscale chart | |
| | | Color Pyrometer & Lux Meter | |
| | White Shading | Halogen lamp | |
| VTR | Sensitivity adj of Tape sensor (Auto) | Tape End/Beg. Detect Cassette (VFK1217) | |
| | PG Shifter (Auto) | Oscilloscope | |
| | | DV Color bar Alignment Tape (VFM3010EDS) | NTSC model only |
| | | DV Color bar Alignment Tape (VFM3110EDS) | PAL model only |
| | Luminance Level | Waveform Monitor | NTSC model only |
| | | Oscilloscope | PAL model only |
| | Chroma Level | Waveform Monitor | NTSC model only |
| | | Oscilloscope | PAL model only |
| LCD | PLL | Oscilloscope | |
| | Pedestal Level | Oscilloscope | |
| | Contrast | Oscilloscope | |
| | Sub Contrast | Oscilloscope | |
| | White balance | Oscilloscope | |
| EVF | PLL | Oscilloscope | |
| | Pedestal Level | Oscilloscope | |
| | Contrast | Oscilloscope | |
| | Sub Contrast | Oscilloscope | |
| | White balance | Oscilloscope | |

**NOTE:** The Zoom SW center value adjustment is contained in Camera adjustment menu but it is not on adjustment of the camera system.

# 3. PC EVR (ADJUSTMENT) SOFTWARE

## 3-1. BOOT UP THE ADJUSTMENT SOFTWARE

1. Copy all files of EVR software (VFK1908:NTSC / VFK1909:PAL) to created directly on PC.
2. Restart the PC in DOS mode.
3. In case NTSC software, type **"dvc30p"** and press ENTER key, then EVR software boot up.
   In case PAL software, type **"dvc30e"** and press ENTER key, then EVR software boot up.
4. Wait for a few seconds so that the EVR adjustment program is started.

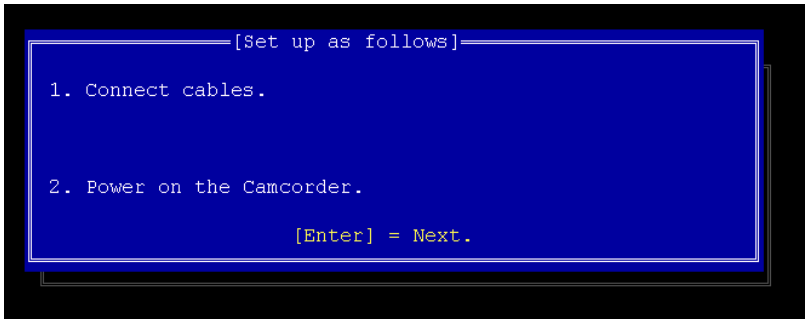


PRESS ENTER KEY

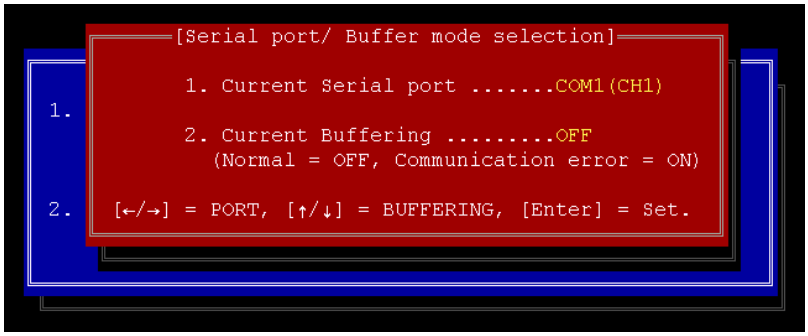


PRESS ENTER KEY

**NOTE:**
**In case of communication error occurred in DOS mode, please try to boot an EVR software in MS-DOS WINDOWS screen.**

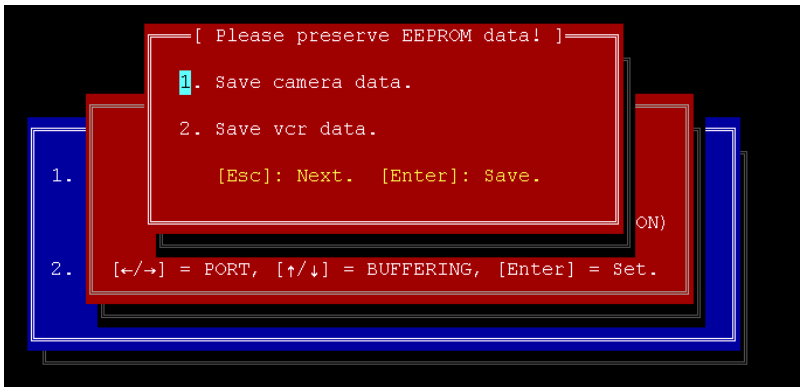


Normally this screen is appears. We recommended storing the EEPROM data before starting adjustment. If you want to skip storing the data, PRESS ESC KEY, then go storing to Main menu.
**NOTE: It is only adjustment data that is actually saved.**

In case of select No.1

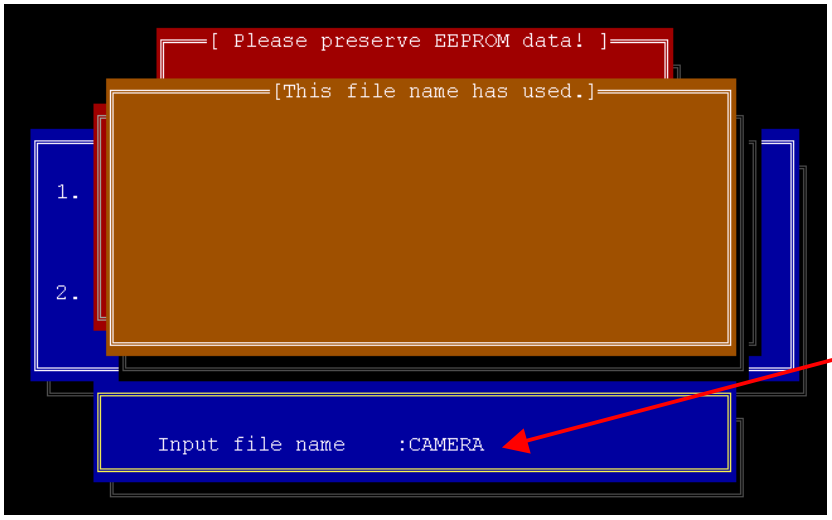


Input file name and PRESS ENTER KEY.

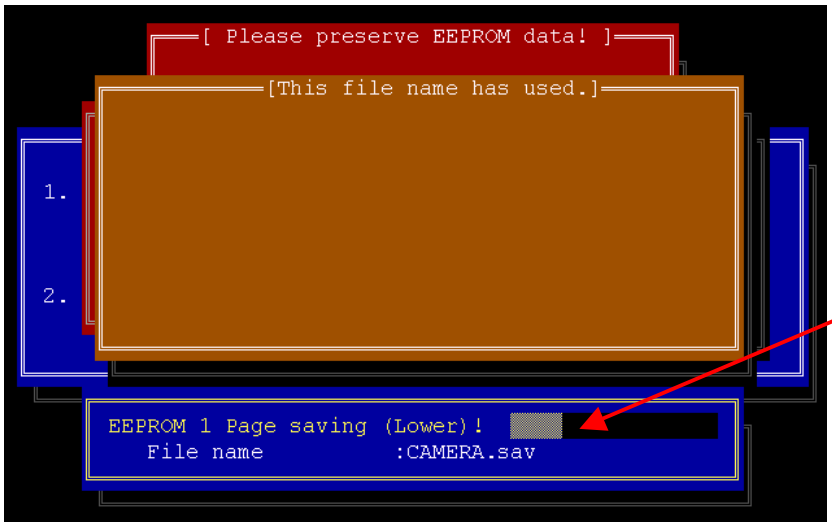


Saving the data is started.

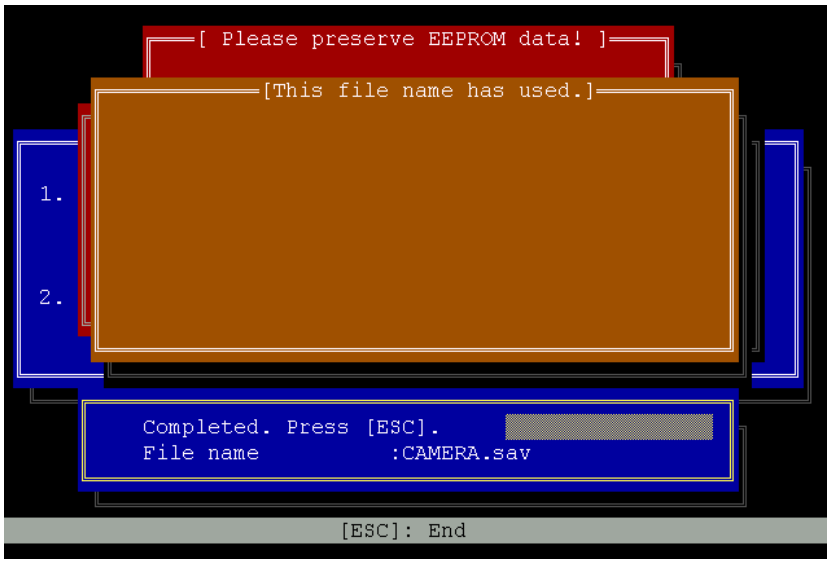


When the data is stored completed, this screen is appears. PRESS ESC KEY.

Return to this screen and in case of select No.2, PRESS ENTER KEY.

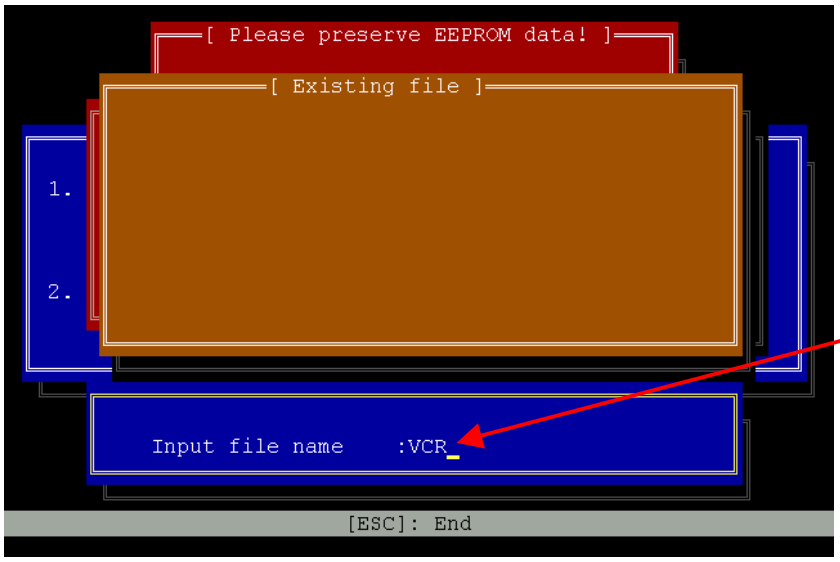


Input file name and PRESS ENTER KEY.

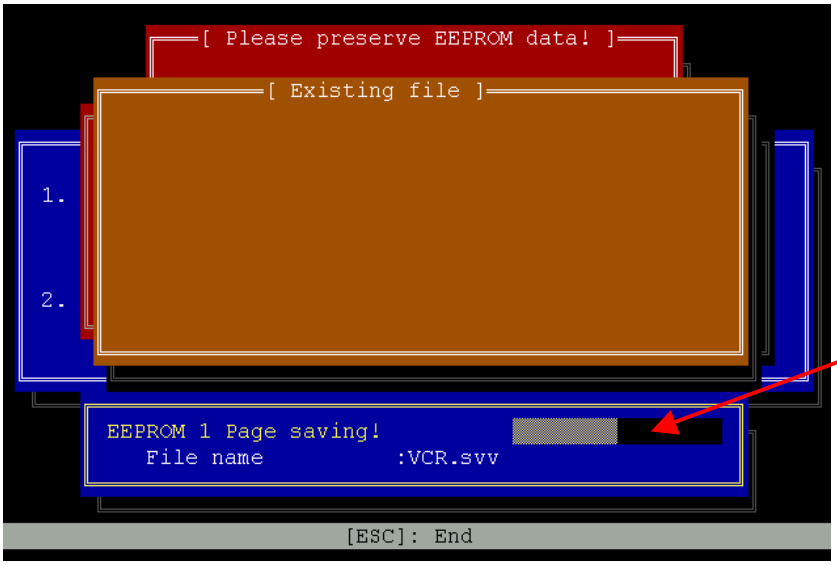


Saving the data is started.

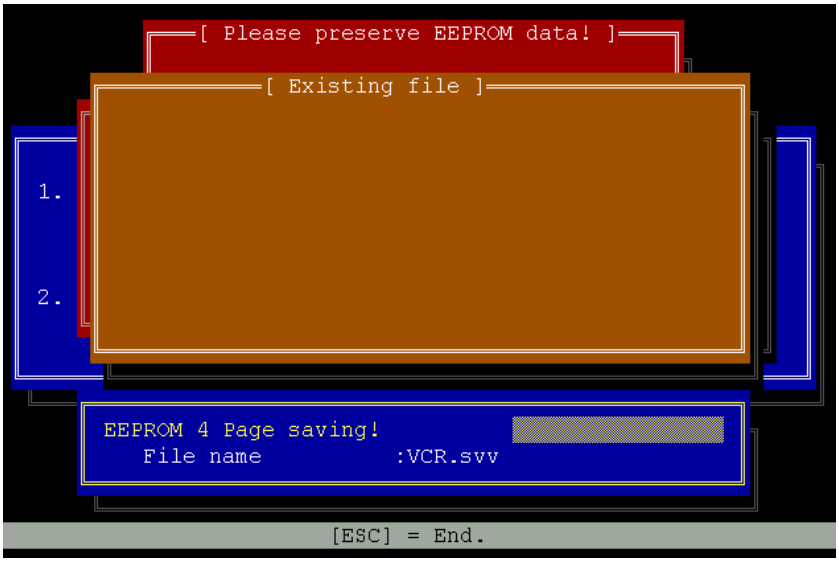


When the data is stored completed, this screen appears. PRESS ESC KEY.

## 3-2. How to Use the Main Menu

Select a Sub Menu to check, adjust the unit and etc. by pressing ↑↓ (UP/DOWN) Key in Main Menu. Then press **"ENTER"** Key. the Sub Menu will be displayed.

**NOTE:** Menu (pages) 3,4,5 and 6 are needed for adjustment.

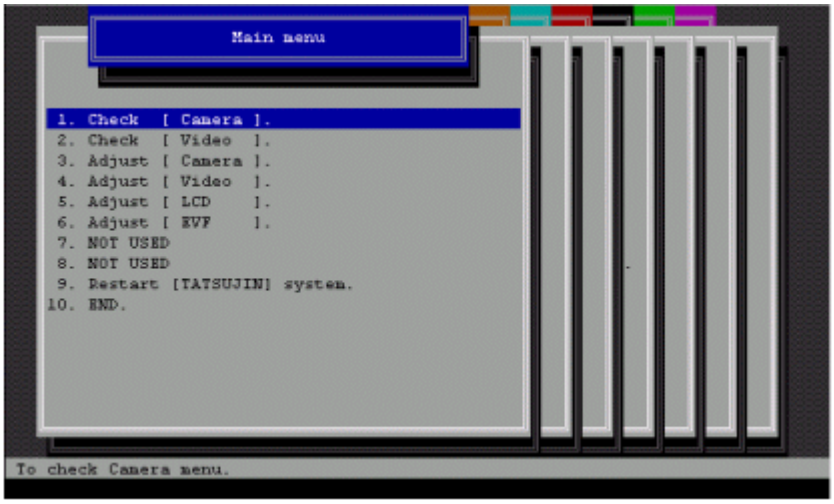


With using ←→ keys, the menu can also be changed.

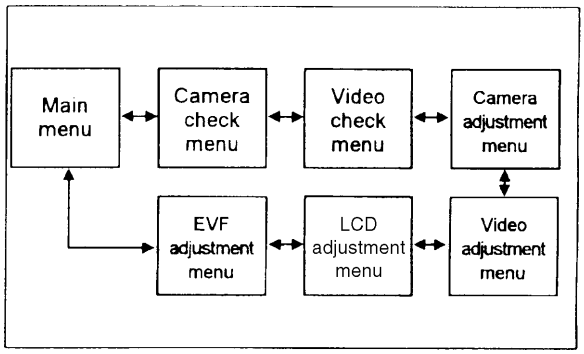

## 3-3. Introduction of the Sub Menu

### 1) Camera Check Menu

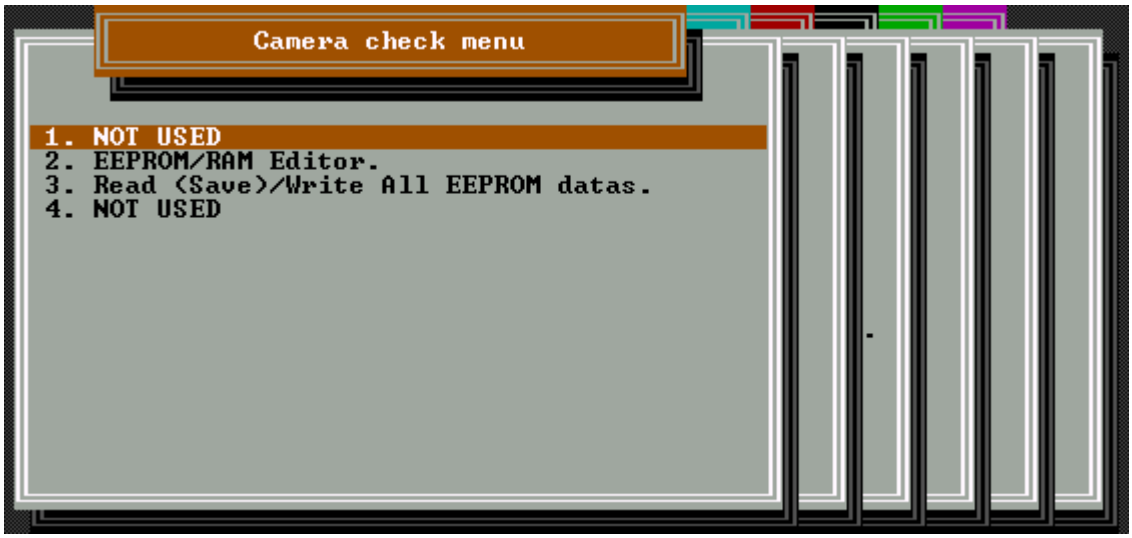


### 2) Video Check Menu

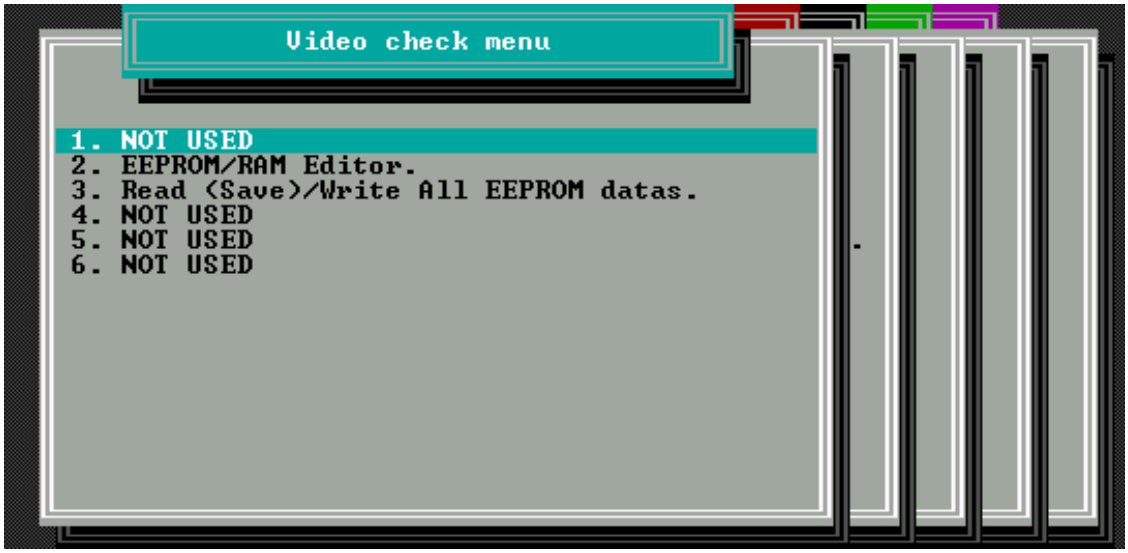


### 3) Camera Adjustment Menu

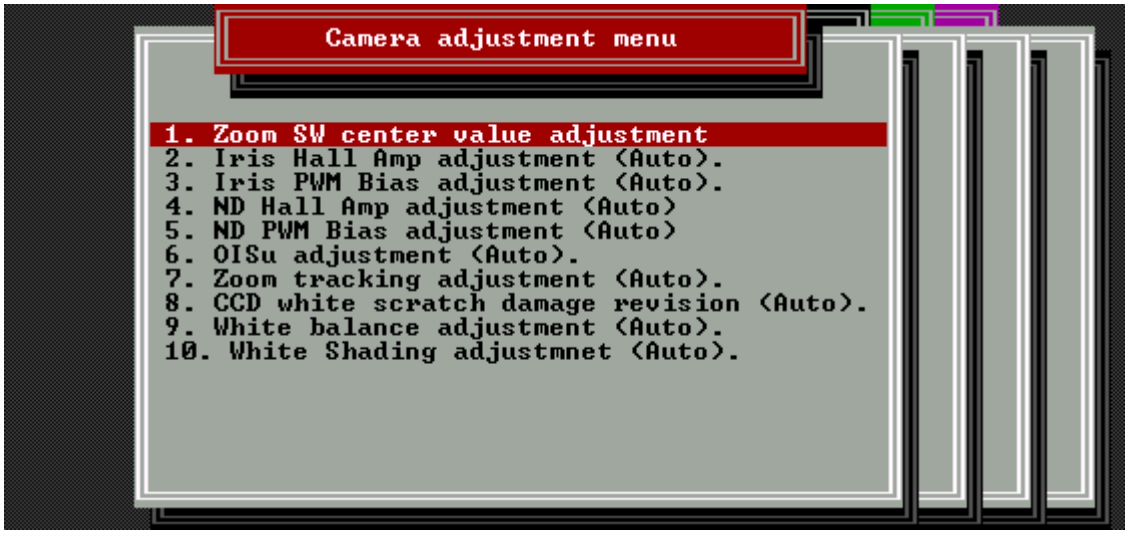

**4) Video Adjustment Menu**

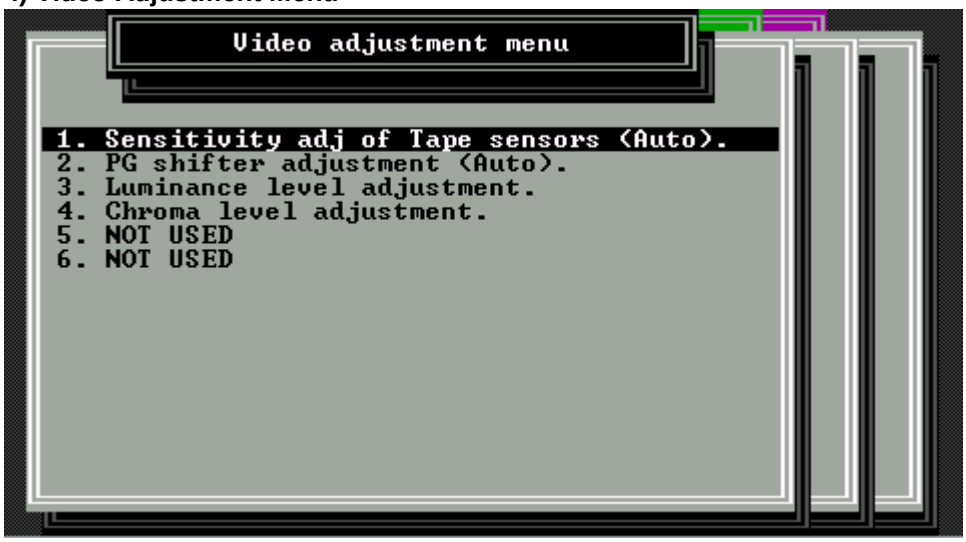


**5) LCD Adjustment Menu**

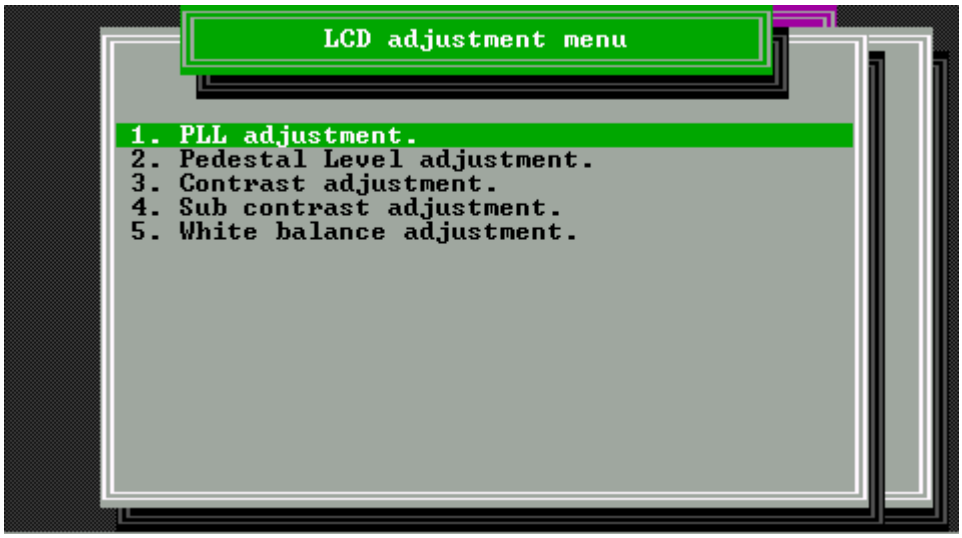


**6) EVF Adjustment Menu**

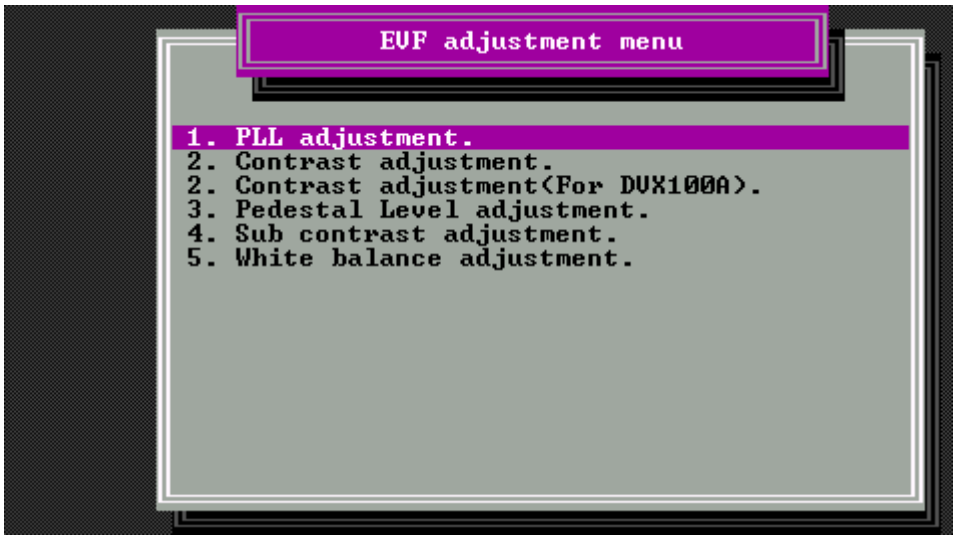

# 4. EEPROM

All adjustment data has been stored in the EEPROM.
There are two EEPROM in this camera recorder as shown in the table below.

| NAME | REF. No. |
|---|---|
| CAMERA EEPROM | IC3006 (CAMERA C.B.A.) |
| VTR EEPROM | IC2008 (VTR C.B.A.) |

**NOTE:**
**To save the EVR adjustment data to the EEPROM, follow items 4-1, 4-2, and 4-3. There is also additional data stored in this EEPROM (This EVR software can save or write only adjustment data).**

**NOTE:**
Be sure to save both the EEPROM data into the personal computer before performing service and adjustment, in order to avoid any accidental data loss.

## 4-1. How to Save Camera Adjustment Data

1. Select **"Camera Check menu"** In the Main menu, and then press the **"Enter"** key.
2. Select **"3. Read (Save) / Write All EEPROM datas"** in the Camera check menu, and then press the **"Enter"** key.

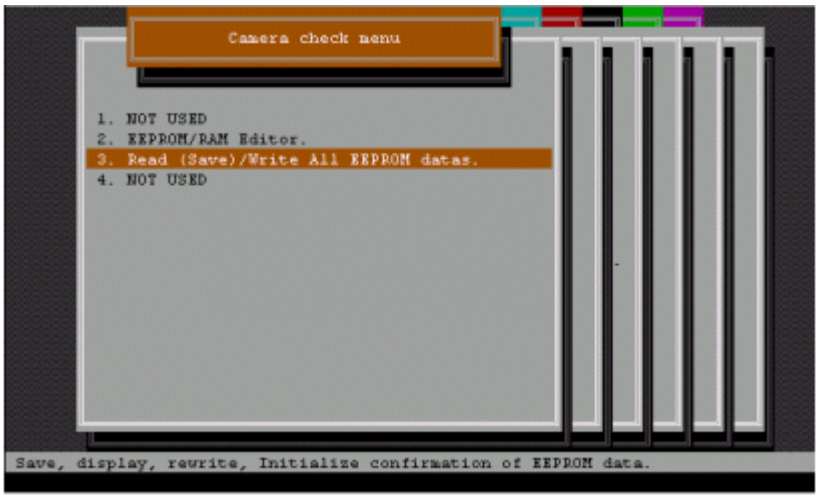


3. Select **"9. Save all data of EEPROM"** in **"3. Read (Save) / Write All EEPROM datas"** menu, and then press the **"Enter"** key.

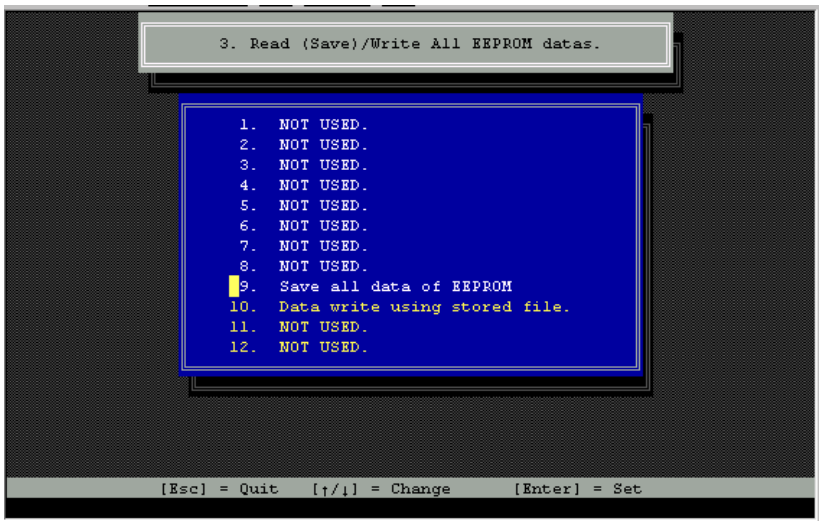

4. Type the File name and, then press the **“Enter”** key. The data of adjustment value can be stored in the personal computer. (Please refer to item **“3-1. BOOT UP THE ADJUSTMENT SOFTWARE”**)

## 4-2. How to Save VTR Adjustment Data

1. Select **“Video Check menu”** In the Main menu, and then press the **“Enter”** key.
2. Select **“3. Read (Save) / Write All EEPROM datas”** in the Video check menu, and then press the **“Enter”** key.

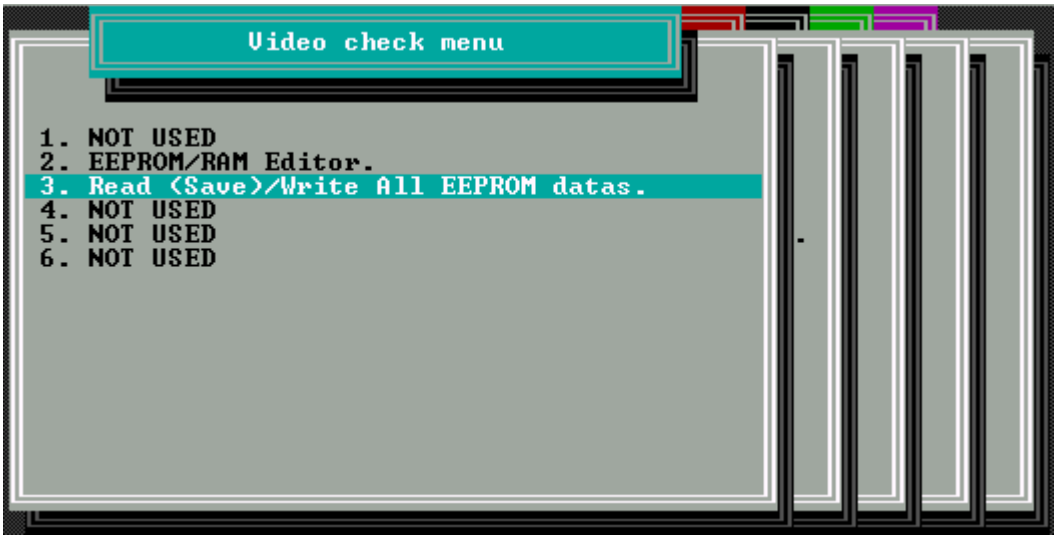


3. Select **“5. Save all EEPROM data”** in **“3. Read (Save) / Write All EEPROM datas”** menu, and then press the **“Enter”** key.

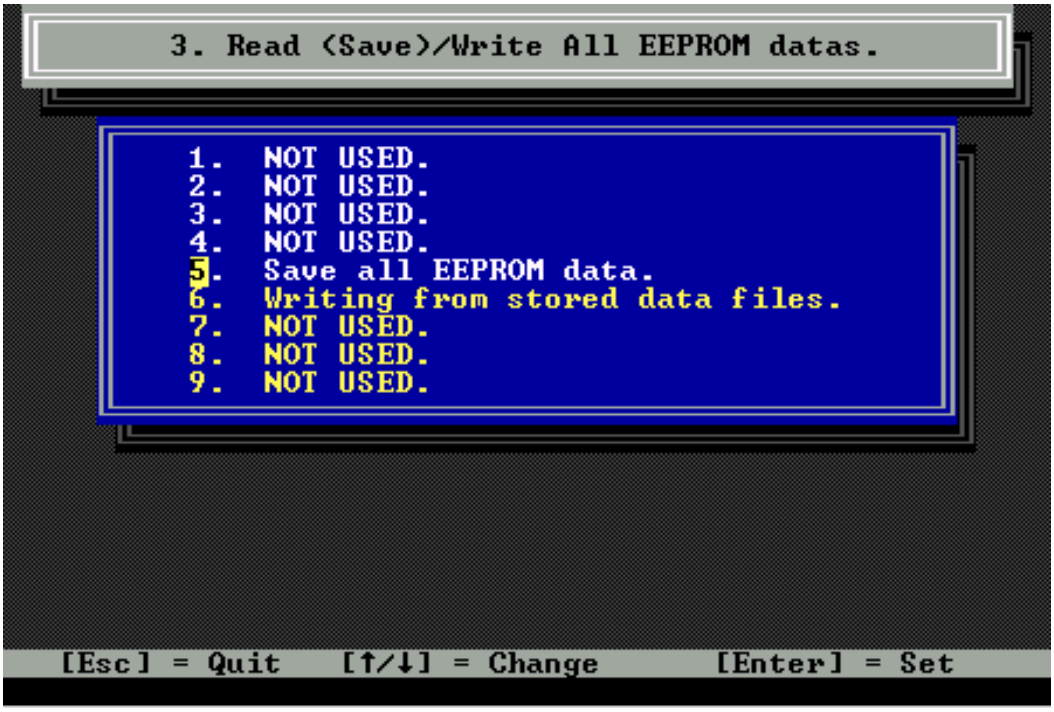


4. Type the File name, and then press the **“Enter”** key. The data of adjustment value will be stored in the personal computer.

## 4-3. REWRITE Adjustment Data

### 4-3-1. How to Rewrite Adjustment data on Camera C.B.A.

1. Select **"Camera Check menu"** In the Main menu, and then press the **"Enter"** key.
2. Select **"3. Read (Save) / Write All EEPROM datas"** in the Camera check menu, and then press the **"Enter"** key.
3. Select **"10. Data write using stored file"** in **"3. Read (Save) / Write All EEPROM datas"** menu, and then press the **"Enter"** key.
4. Type the saved file name, and then press the **"Enter"** key.
5. Select **"9. EEPROM ALL (2 Kbyte)"**, and then press the **"Enter"** key.
6. The adjustment data will be written in EEPROM (IC3006).

### 4-3-2. How to Rewrite Adjustment data on VTR C.B.A.

1. Select **"Video Check menu"** In the Main menu, and then press the **"Enter"** key.
2. Select **"3. Read (Save) / Write All EEPROM datas"** in the Video check menu, and then press the **"Enter"** key.
3. Select **"6. Writing from the stored data files"** in the **"3. Read (Save) / Write All EEPROM datas"** menu, and then press **"Enter"** key.
4. Type the saved file name, and then press the **"Enter"** key.
5. Select **"5. Write EEPROM (1024 byte)"**, and then press the **"Enter"** key.
6. The adjustment data can be written in EEPROM (IC2008).

## 4-4. How to change the EEPROM Data.

EEPROM data can be changed individuality address unit. When changing EEPROM data with this EVR software, it uses item "2. EEPROM/RAM Editor" of each check menu.

**NOTE:** Before changing the Camera or VTR EEPROM data, be sure to save ALL EEPROM data into the personal computer to avoid any accidental data loss. Regarding the saving method, refer to item 4-1 and 4-2 in this section.

### 4-4-1. How to change the CAMERA EEPROM data.

1. Boot up EVR software and open the Camera check menu.
2. Select **"2. EEPROM/RAM Editor"** and press **"ENTER"** key.

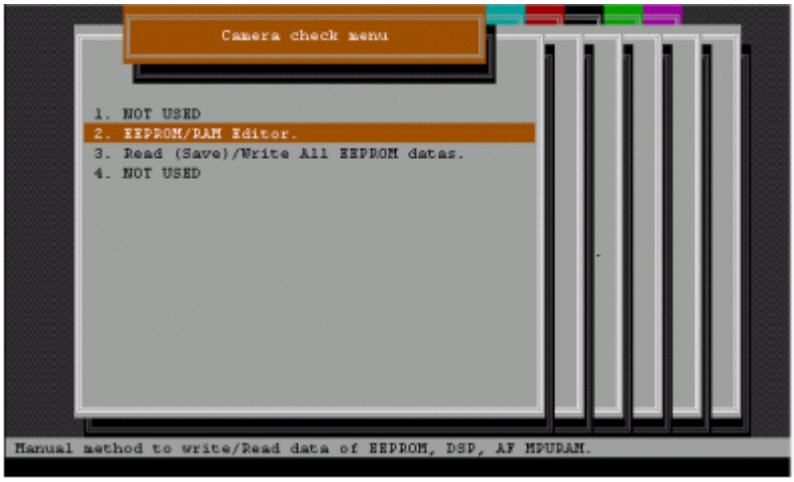

3. Below indicated screen is displayed.

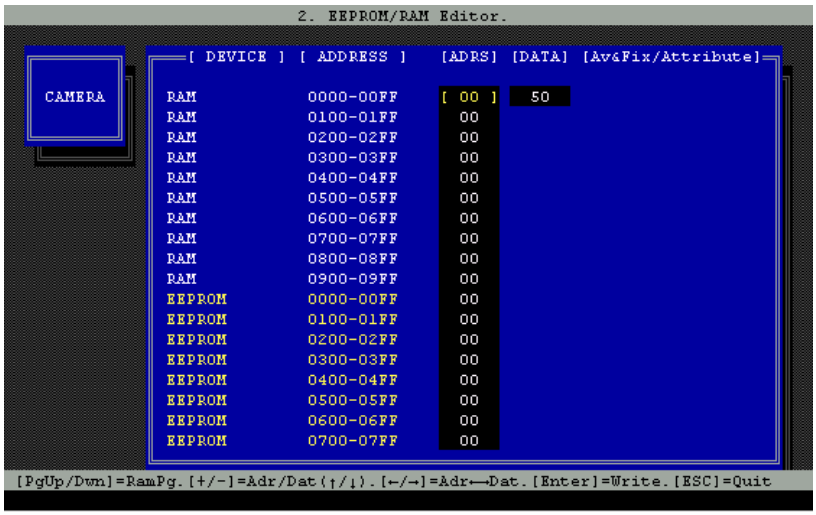


4. In case of data is change to FF from 70 on address 0542, select a line **"EEPROM 0500-05FF"** by arrow key (↑/↓) and input a value as 42 to column [ADRS]. Next cursor is moved to column [DATA] by arrow key (→/←) and input a value as FF. And press ENTER key to write to EEPROM.

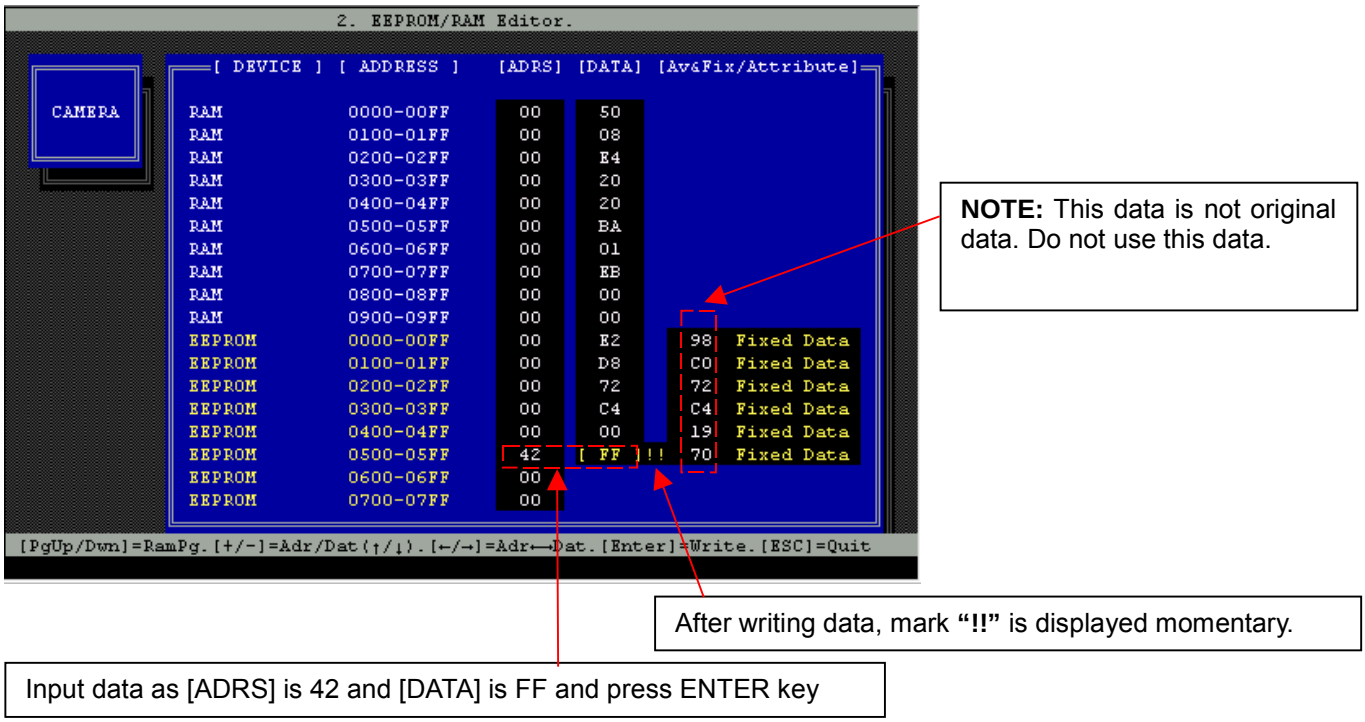


5. Please change the other part of address data follow the above description.

**NOTE:** The address is indicated as 4 digits of numerical value. Select the line based on first 2 digit and value behind 2 digit is input value to column [ADRS].

| | |
|---|---|
| EEPROM | 0000-00FF |
| EEPROM | 0100-01FF |
| EEPROM | 0200-02FF |
| EEPROM | 0300-03FF |
| EEPROM | 0400-04FF |
| EEPROM | 0500-05FF |
| EEPROM | 0600-06FF |
| EEPROM | 0700-07FF |

In case of 00ED, select the line of **"0000-00FF"**.

In case of 0542, select the line of **"0500-05FF"**

### 4-4-2. How to change the VTR EEPROM data.

1. Boot up EVR software and open the Video check menu.
2. Select **"2. EEPROM/RAM Editor"** and press **"ENTER"** key.

3. Below indicated screen is displayed.

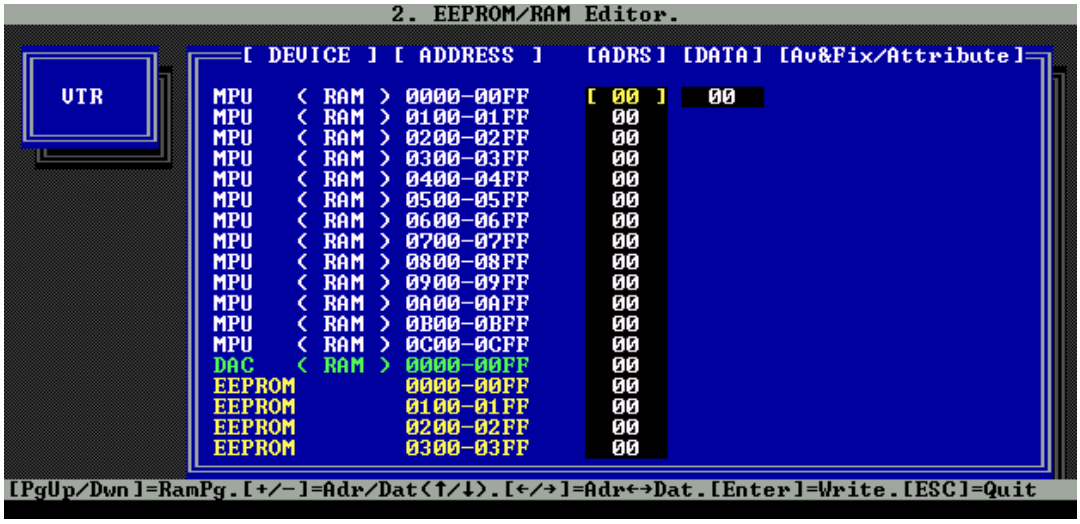


4. How changing the EEPROM data is the same as CAMERA EEPROM refer to previous item 4-4-1.

# 5. ZOOM SW Center Value Adjustment

Be sure to save the CAMERA adjustment data into the Personal Computer, before performing adjustment.

This adjustment has to be performed, when the CASSETTE COVER UNIT or ZOOM SW in CASSETTE COVER UNIT is replaced.

1. Open the **"Camera adjustment menu"**.
2. Select **"1. Zoom SW center value adjustment"** in the camera adjustment menu, and then press **"ENTER"** key.
3. Set to CAMERA mode in camera recorder following the message **"Auto / Manually set to CAMERA mode."**, and then press **"ENTER"** key.
4. Below indicated screen is displayed.

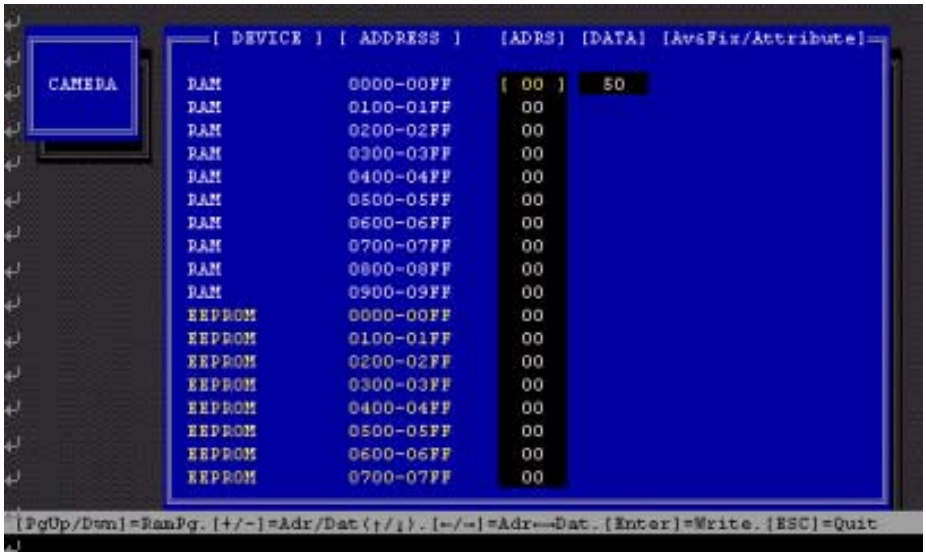


5. Select a line **"RAM 0800 - 08FF"** by arrow key (↑/↓) and input a value as FE to column [ADRS].
6. Press Tele side of zoom switch on Grip Cover side to fully Tele position and release a finger slowly from button.
7. Write down displayed numerical value in column [DATA].

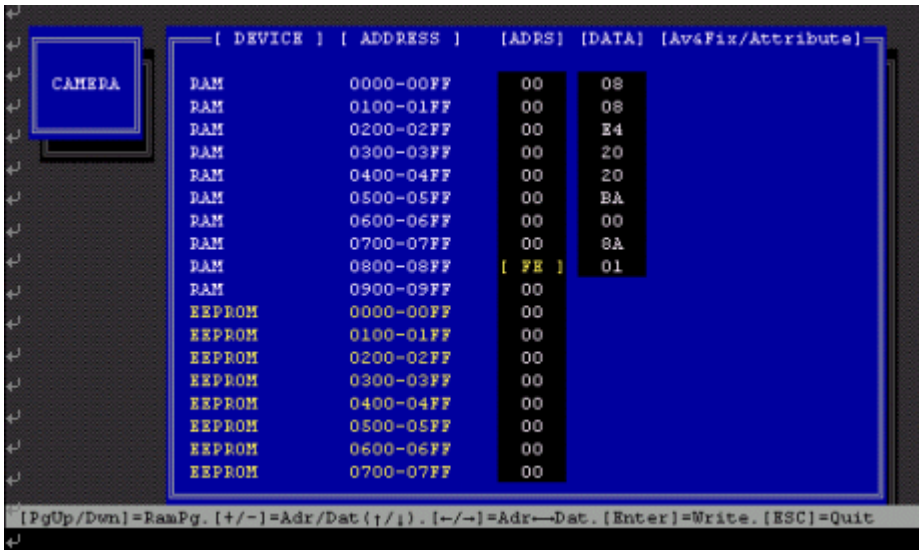


8. Input a value FF to column [ADRS] on line **"RAM 0800 - 08FF"** .
9. Write down displayed numerical value in column [DATA].
10. Repeat step 5 to 9 twice to write down the value.
11. Select the minimum measurement value.
12. Press Wide side of zoom switch on Cassette Cover side to fully wide position and release a finger slowly from button and repeat step 5 to 9 three times.
13. Select the maximum measurement value.

**<For example>**

| --- | FE (Upper) | FF (Lower) |
|---|---|---|
| Tele | 01 | C3 |
| | 01 | C5 |
| | 01 | C7 |
| Wide | 02 | 2C |
| | 02 | 2C |
| | 02 | 2B |

Select minimum value → 01C3

Select maximum value → 022C

Calculate center value

(01C3 + 022C)÷2 = 01F7

Upper Lower

14. Calculate center value of minimum and maximum value.
15. Select a line **"EEPROM 0200 - 02FF"** by arrow key (↑/↓) and input a value as E7 to column [ADRS].
16. Cursor is moved to column [DATA] by arrow key (→/←) and input a value as lower data value (for example: F7 as indicated as above). And press ENTER key to write to EEPROM.
17. Select a line **"EEPROM 0300 - 03FF"** by arrow key (↑/↓) and input a value as E7 to column [ADRS].
18. Cursor is moved to column [DATA] by arrow key (→/←) and input a value as upper data value (for example: 01 as indicated as above). And press ENTER key to write to EEPROM.

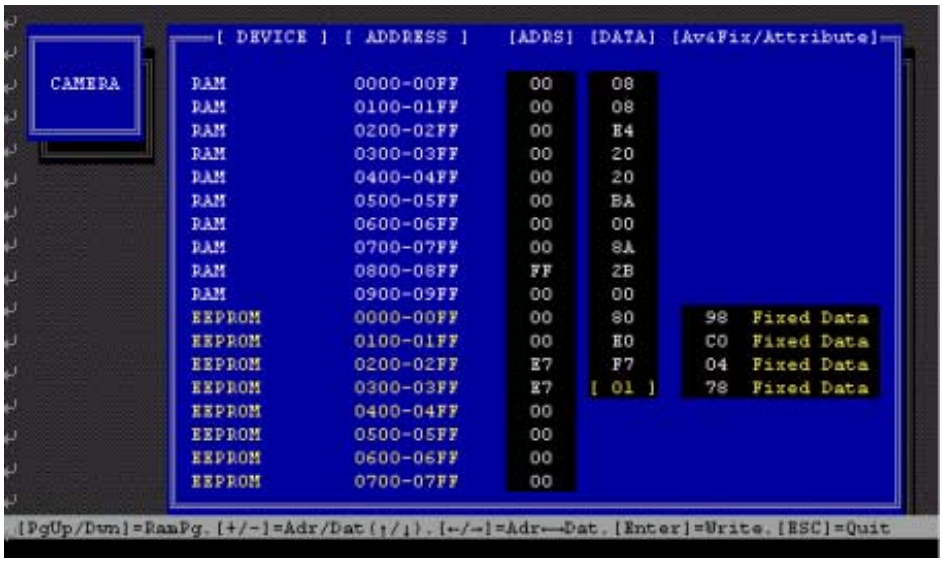

# 6. CAMERA ADJUSTMENT PROCEDURE

Be sure to save the Camera adjustment data into the Personal Computer, before performing adjustment.
Perform all PC-EVR adjustments, by referring to procedures on PC screen.

## 6-1. Iris Hall Amp Adjustment (AUTO)

This adjustment is automatically executed.

1. Open the **"Camera adjustment menu"**. Please
2. Select **"2. Iris Hall Amp adjustment (Auto)"** in the Camera adjustment menu, and then press the **"Enter"** key.
3. Set to CAMERA mode in camera recorder follow the message **"Auto / Manually set to CAMERA mode."**, and then press the **"Enter"** key.

PRESS ENTER KEY.

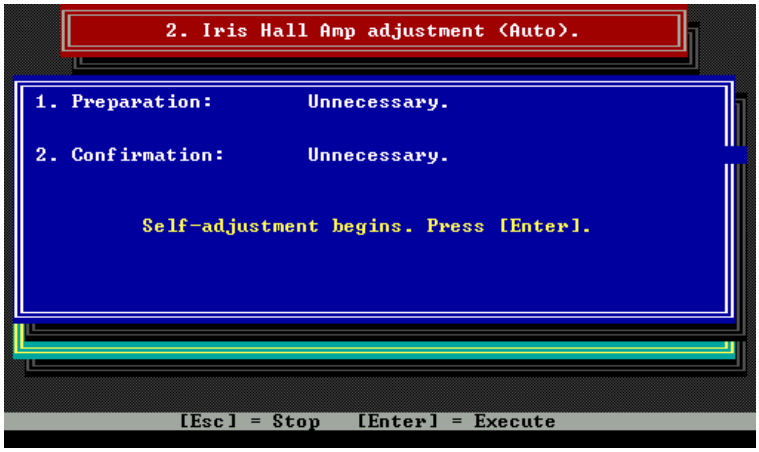


PRESS ENTER KEY, then adjustment is started.

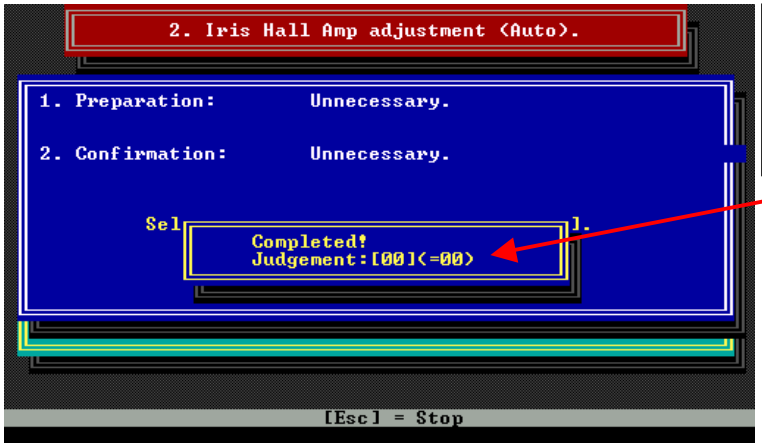


When adjustment is finished, message **"Completed!"** appears and numerical value is changed **"00"**.
The program goes to Camera adjustment menu automatically.

## 6-2. Iris PWM Bias Adjustment (AUTO)

This adjustment is automatically executed.

1. Open the **"Camera adjustment menu"**.
2. Select **"3. Iris PWM Bias adjustment (Auto)"** in the Camera adjustment menu, and then press the **"Enter"** key.
3. Set to CAMERA mode in camera recorder follow the message **"Auto / Manually set to CAMERA mode."**, and then press the **"Enter"** key.

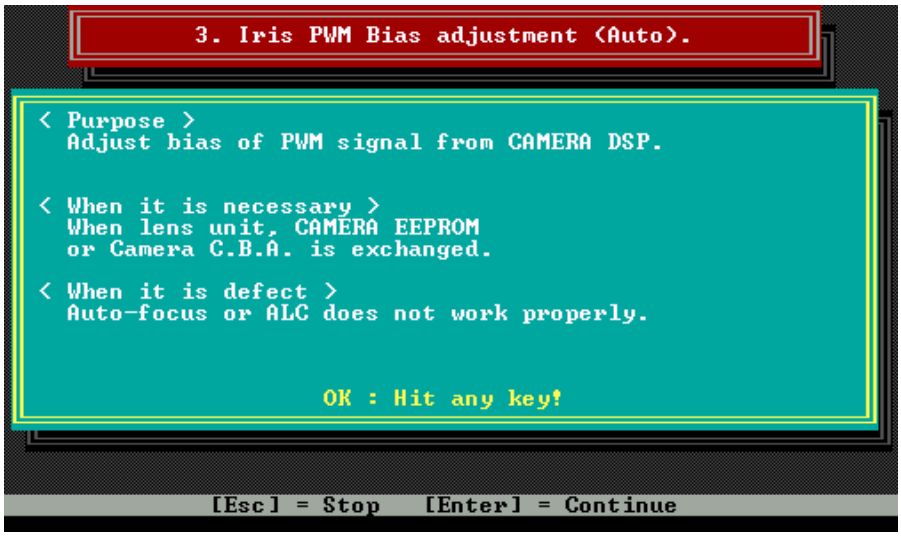


PRESS ENTER KEY.

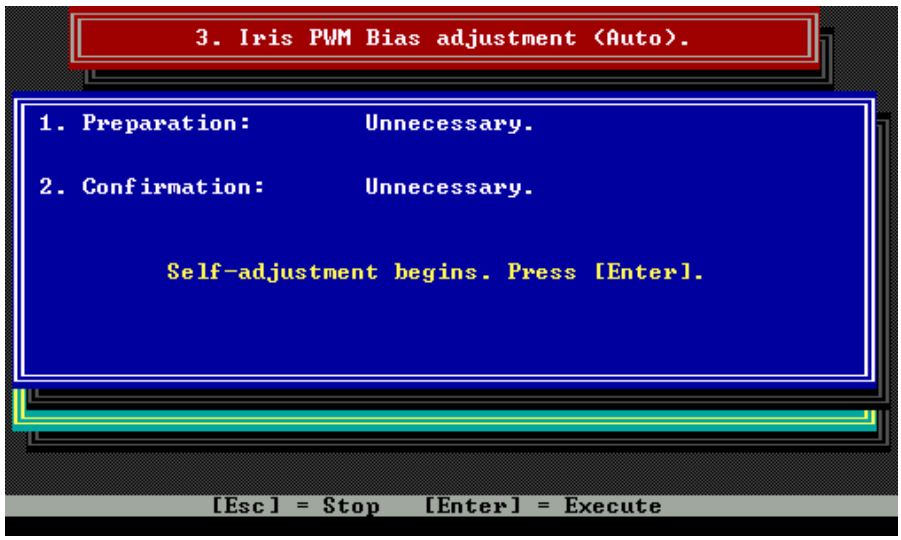


PRESS ENTER KEY,
then adjustment is started.

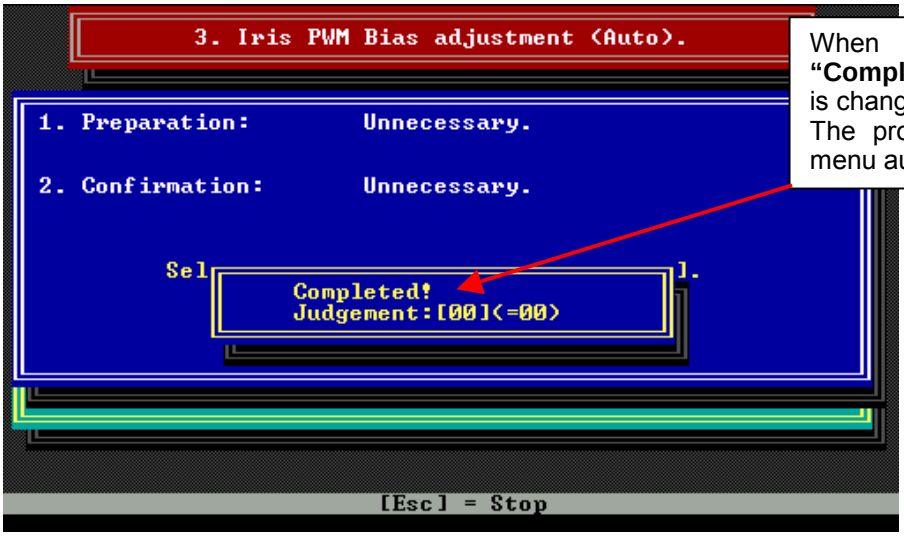


When adjustment is finished, message **"Completed!"** appears and numerical value is changed **"00"**.
The program goes to Camera adjustment menu automatically.

## 6-3. ND Hall Amp Adjustment (AUTO)

This adjustment is automatically executed.

1. Open the **"Camera adjustment menu"**.
2. Select **"4. ND Hall Amp adjustment (Auto)"** in the Camera adjustment menu, and then press the **"Enter"** key.
3. Set to CAMERA mode in camera recorder follow the message **"Auto / Manually set to CAMERA mode."**, and then press the **"Enter"** key.

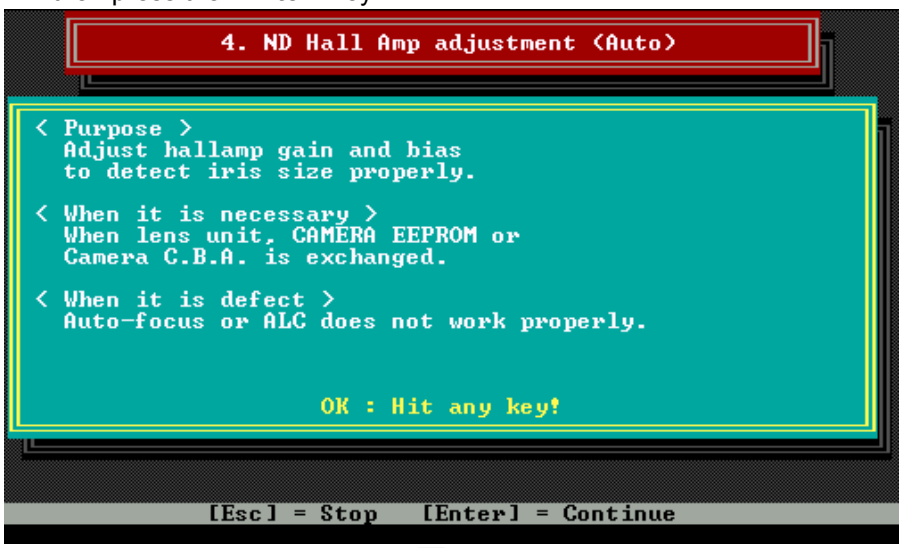


PRESS ENTER KEY.

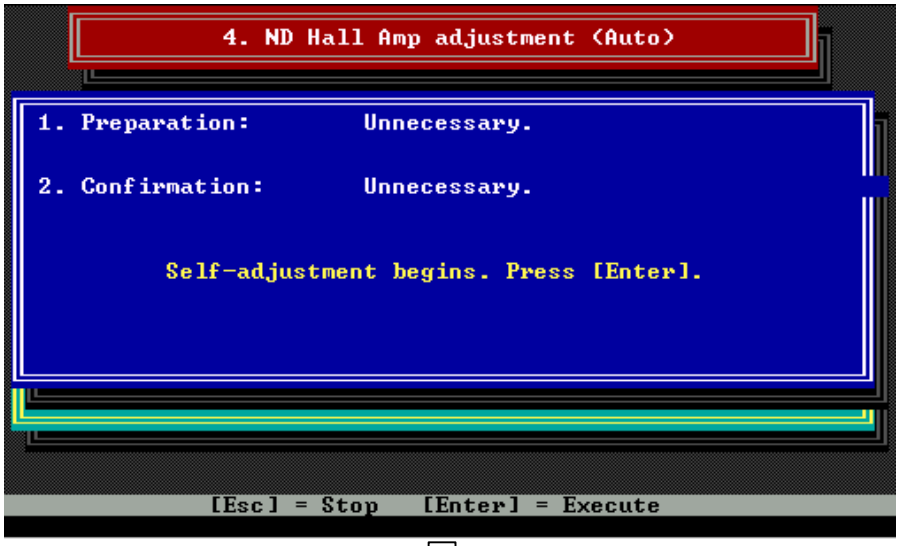


PRESS ENTER KEY,
then adjustment is started.

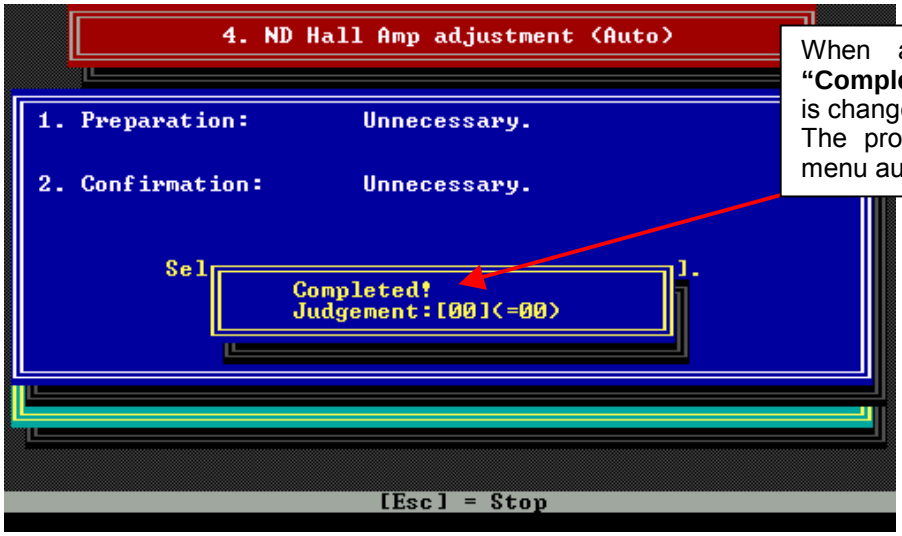


When adjustment is finished, message **"Completed!"** appears and numerical value is changed **"00"**.
The program goes to Camera adjustment menu automatically.

## 6-4. ND PWM Bias Adjustment (AUTO)

This adjustment is automatically executed.

1. Open the **"Camera adjustment menu"**.
2. Select **"5. ND PWM Bias adjustment (Auto)"** in the Camera adjustment menu, and then press the **"Enter"** key.
3. Set to CAMERA mode in camera recorder follow the message **"Auto / Manually set to CAMERA mode."**, and then press the **"Enter"** key.

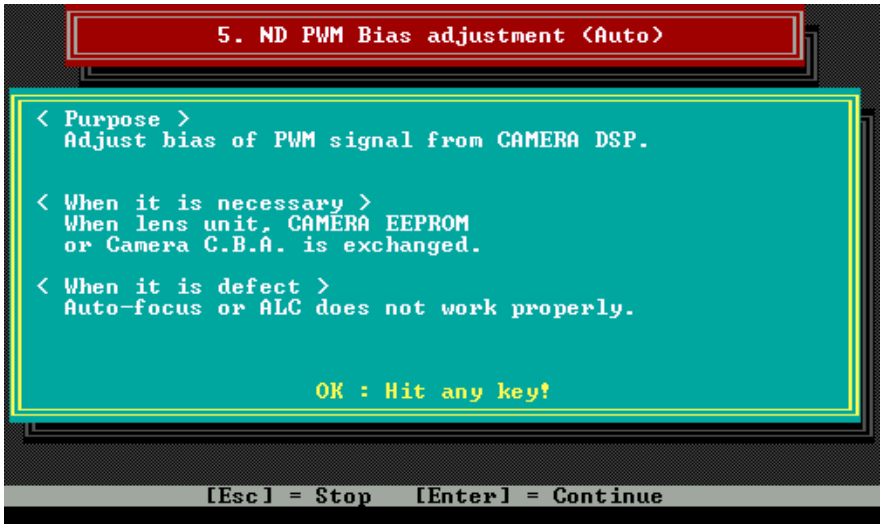


PRESS ENTER KEY.

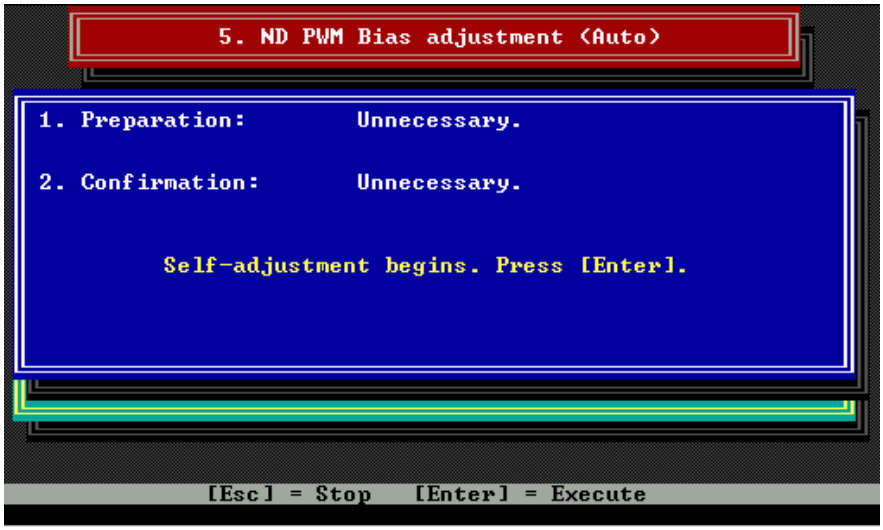


PRESS ENTER KEY,
then adjustment is started.

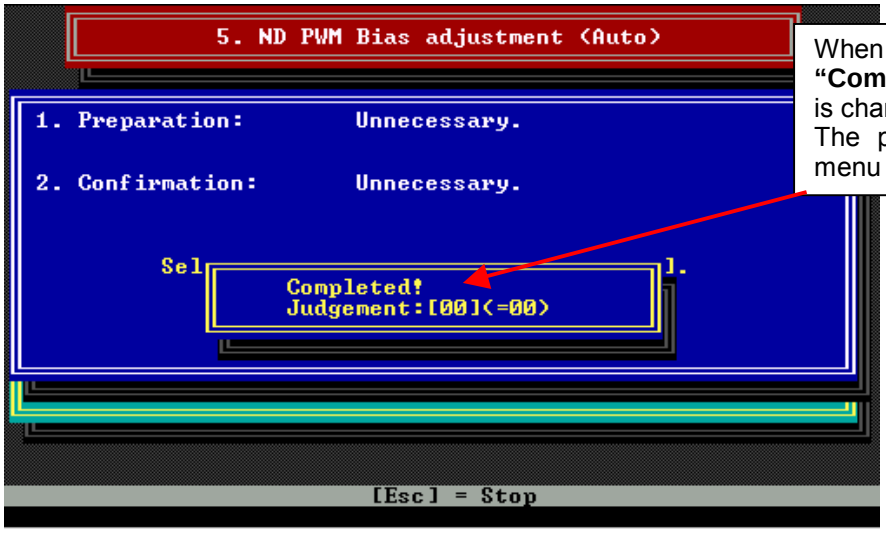


When adjustment is finished, message **"Completed!"** appears and numerical value is changed **"00"**.
The program goes to Camera adjustment menu automatically.

## 6-5. OISu Adjustment (AUTO)

This adjustment is automatically executed.

1. Open the **"Camera adjustment menu"**.
2. Select **"6. OISu adjustment (Auto)"** in the Camera adjustment menu, and then press the **"Enter"** key.
3. Set to CAMERA mode in camera recorder follow the message **"Auto / Manually set to CAMERA mode."**, and then press the **"Enter"** key.

PRESS ENTER KEY.

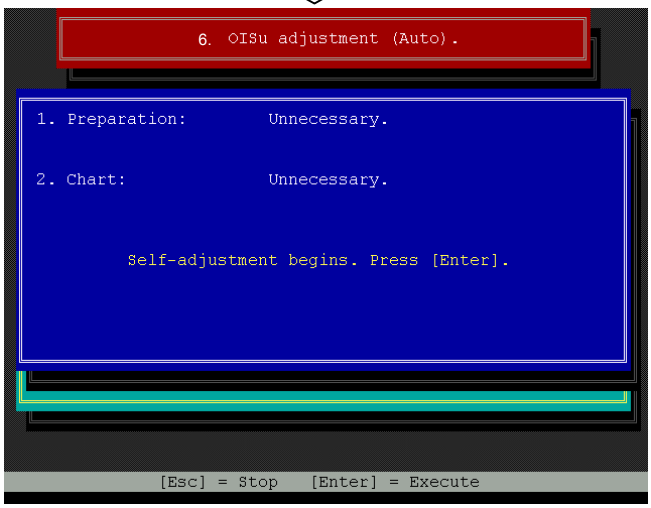


PRESS ENTER KEY, then adjustment is started.

**NOTE:** You will hear a tapping sound, this is OK.

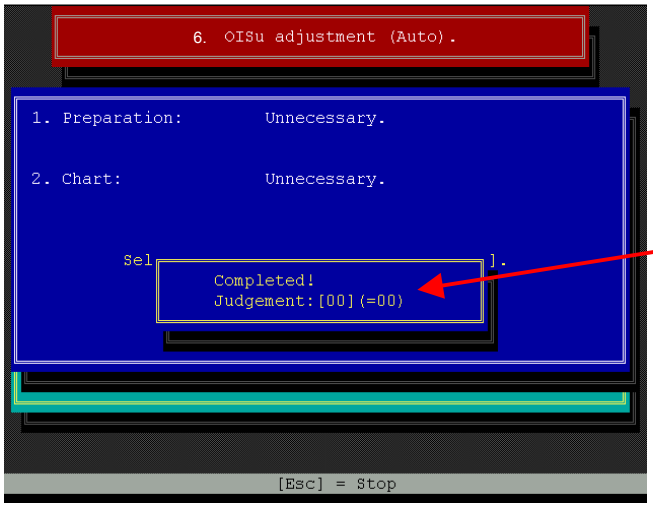


When adjustment is finished, message **"Completed!"** appears and numerical value is changed **"00"**.
The program goes to Camera adjustment menu automatically.

## 6-6. Zoom Tracking Adjustment (AUTO)

This adjustment is automatically executed.

1. Set the 43mm attachment ring (VFK1164TAR43) to front of the Lens.
2. Set the Collimator (VFK1164TCM01) to 43mm attachment ring (VFK1164TAR43) to
3. Open the **"Camera adjustment menu"**.
4. Select **"7. Zoom Tracking adjustment (Auto)"** in the Camera adjustment menu, and then press the **"Enter"** key.
5. Set to CAMERA mode in camera recorder follow the message **"Auto / Manually set to CAMERA mode."**, and then press the **"Enter"** key.

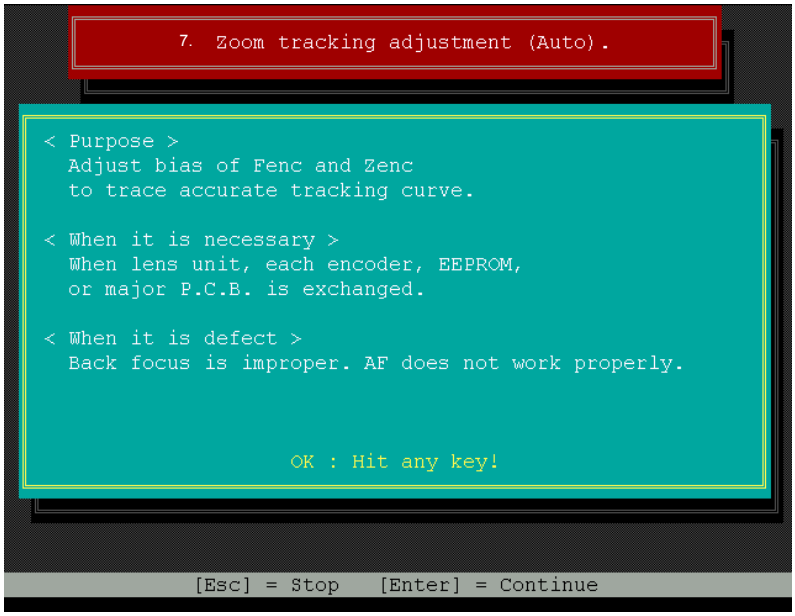


PRESS ENTER KEY.

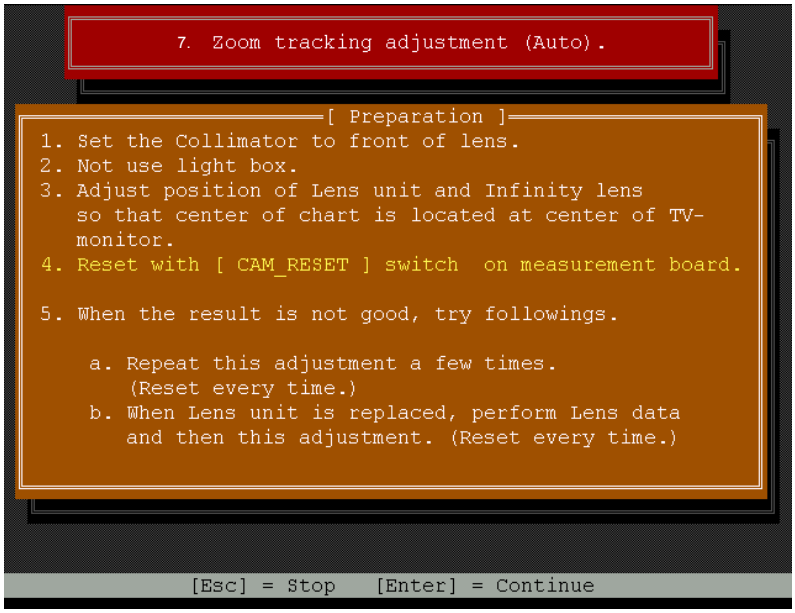


PRESS ENTER KEY.

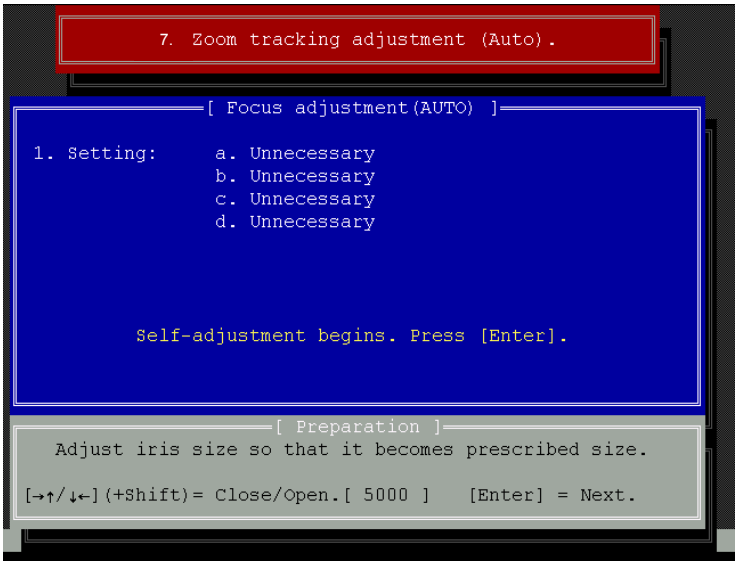


PRESS ENTER KEY, then adjustment is started.

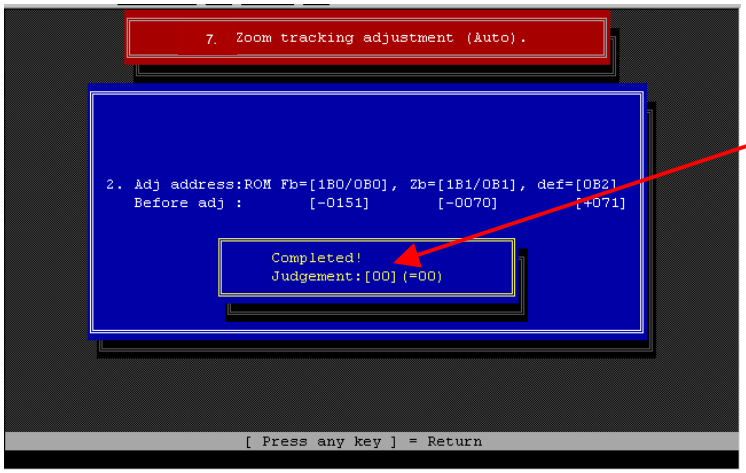


When adjustment is finished, message **"Completed!"** appears and numerical value is changed **"00"**.

6. Connect the VIDEO OUT to Monitor TV.
7. Set the AUTO/MANUAL SELECT switch to MANUAL position.
8. Adjust Focus Ring to set focus of the focus chart in the MF mode, at the maximum of TELE side.
9. Press the Zoom button to change zoom position to maximum WIDE from maximum TELE side and to maximum TELE side from maximum WIDE side, then confirm that the focus chart appears clear.

## 6-7. CCD white scratch damage revision Adjustment (AUTO)

This adjustment is automatically executed.

1. Open the **"Camera adjustment menu"**.
2. Select **"8.CCD white scratch damage revision adjustment (Auto)"** in the Camera adjustment menu, and then press the **"Enter"** key.
3. Set to CAMERA mode in camera recorder follow the message **"Auto / Manually set to CAMERA mode."**, and then press the **"Enter"** key.

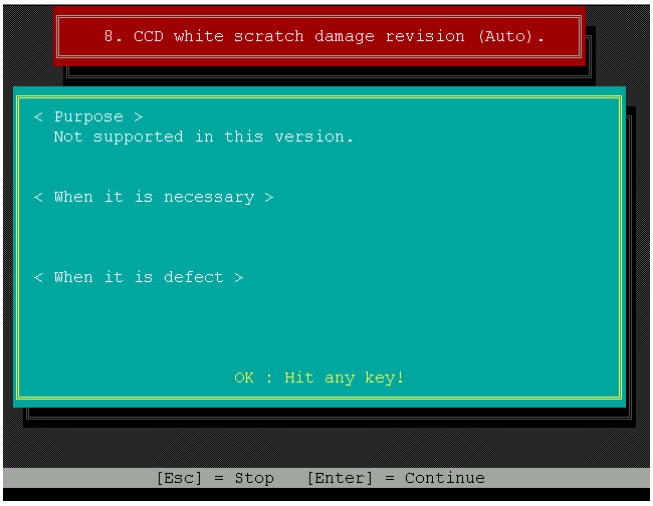


PRESS ENTER KEY.

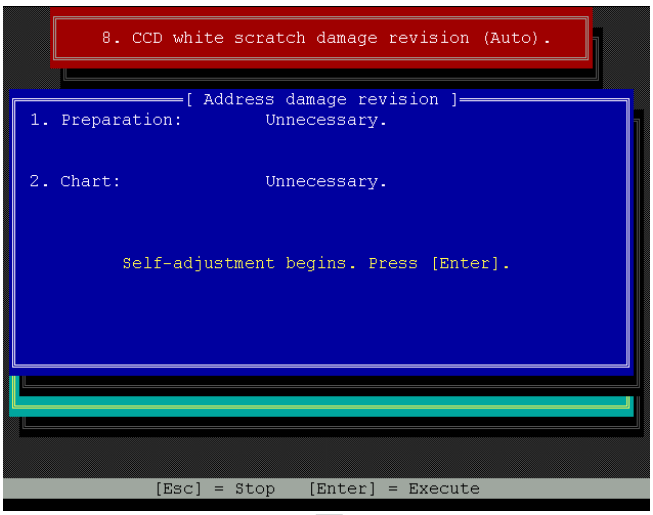


PRESS ENTER KEY, then adjustment is started.

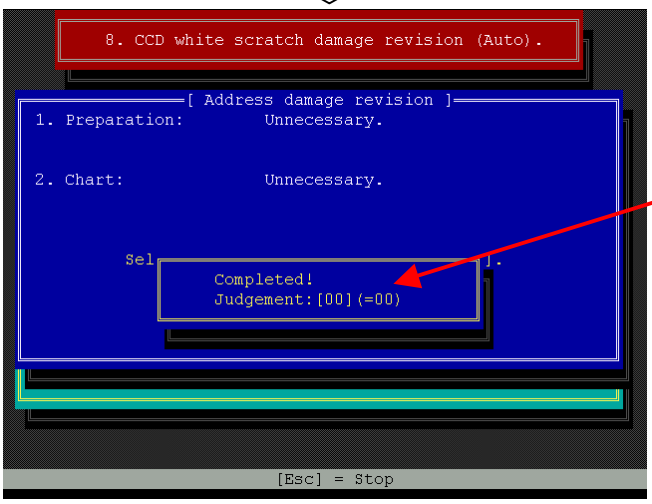


When adjustment is finished, message **"Completed!"** appears and numerical value is changed **"00"**.
The program goes to Camera adjustment menu automatically.

## 6-8. White Balance Adjustment (AUTO)

This adjustment is automatically executed.
Set to CAMERA mode in camera recorder follow the message **"Auto / Manually set to CAMERA mode."**, and then press the **"Enter"** key.

### 6-8-1. Indoor (3100K) White Balance Adjustment (AUTO)

1. Set the AUTO/MANUAL SELECT SW to MANUAL position.
2. Aim the camera recorder at Grayscale Chart under the Halogen lamp condition (3100K, 2000Lux).
3. Execute the ABB by press WHITE BAL button.
4. Set the AUTO/MANUAL SELECT SW to AUTO position (AUTO IRIS & AWB mode).
5. Open the **"Camera adjustment menu"**.
6. Select **"9. White Balance adjustment"** in the Camera adjustment menu, and then press the **"Enter"** key.
7. Select **"5. Indoor (3100K) WB adjustment (Auto)"** in the White balance adjustment menu, and then press the **"Enter"** key.

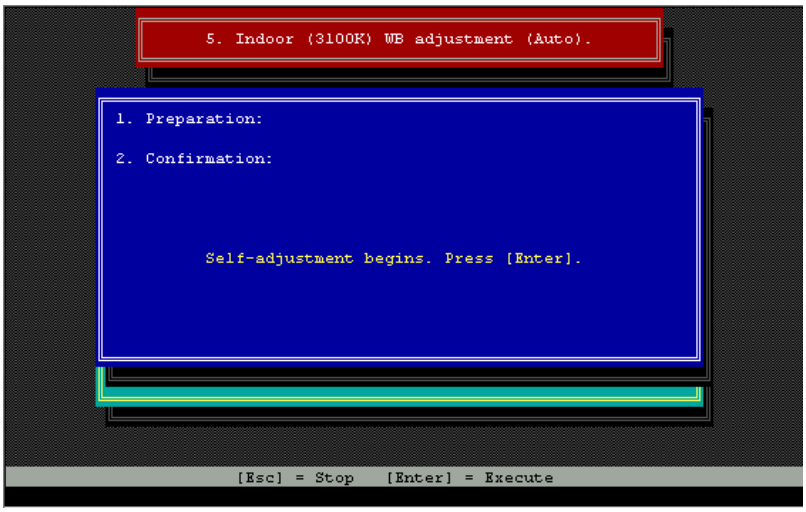


PRESS ENTER KEY, then adjustment is started.

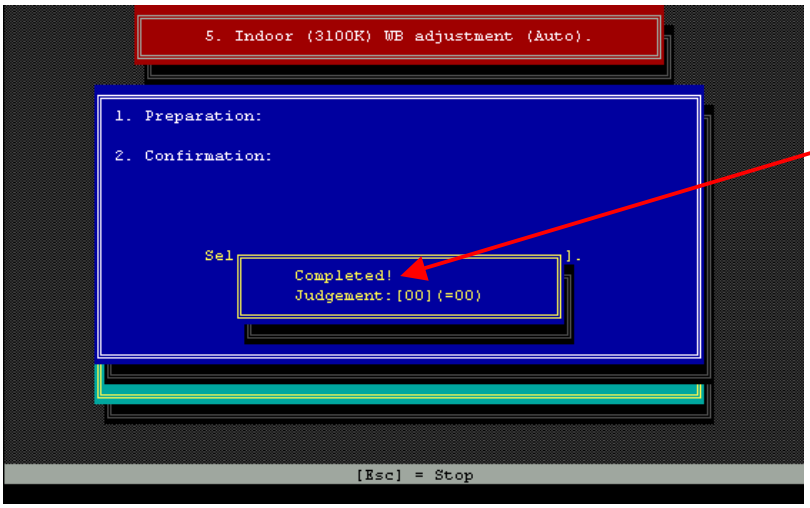


When adjustment is finished, message **"Completed!"** appears and numerical value is changed **"00"**.

### 6-8-2. Outdoor (5100K) White Balance Adjustment (Auto)

1. Set the Color Conversion filters (LB120 : VFK1347), (LBA2 : VFK1884) and (LBB6 : VFK1888) to CC Filter Holder (VFK1345).
2. Set the one Step-down Ring (VFK1346) and two Step Up Rings (VFK1659, VFK1660) to CC Filter Holder as shown in figure.
3. Set the CC Filter Holder with Step-up & down Rings to front of the Lens.

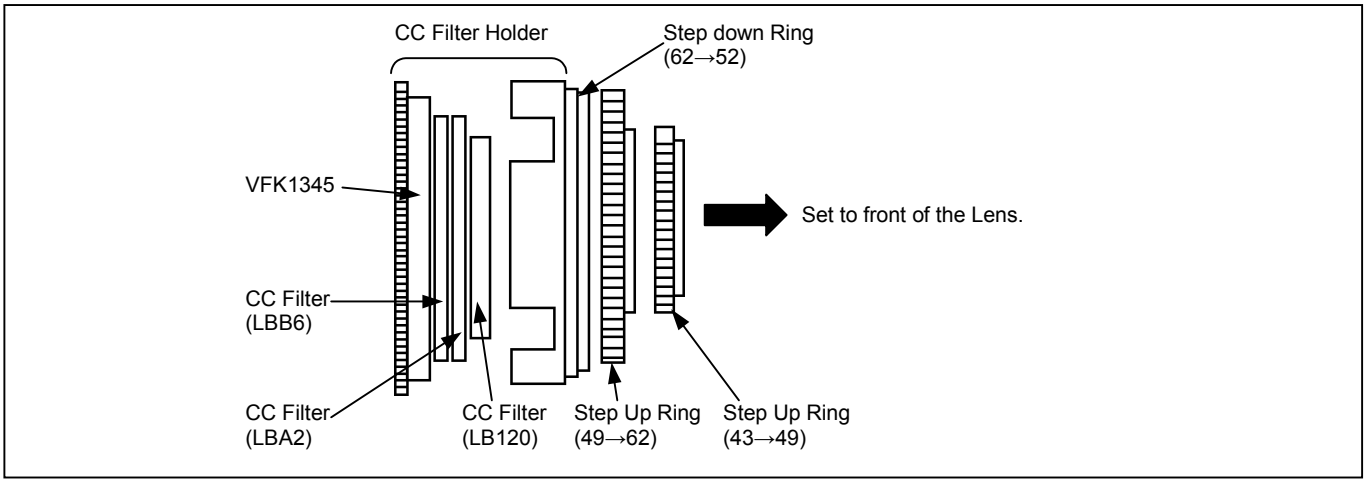


4. Set the AUTO/MANUAL SELECT SW to MANUAL position.
5. Aim the camera recorder at Grayscale Chart under the Halogen lamp condition (3100K, 2000Lux).
6. Execute the ABB by press WHITE BAL button.
7. Set the AUTO/MANUAL SELECT SW to AUTO position (AUTO IRIS & AWB mode).
8. Open the **"Camera adjustment menu"**.
9. Select **"9. White Balance adjustment"** in the Camera adjustment menu, and then press the **"Enter"** key.
10. Select **"6. Outdoor (5100K) WB adjustment (Auto)"** in the White balance adjustment menu, and then press the **"Enter"** key.

PRESS ENTER KEY.

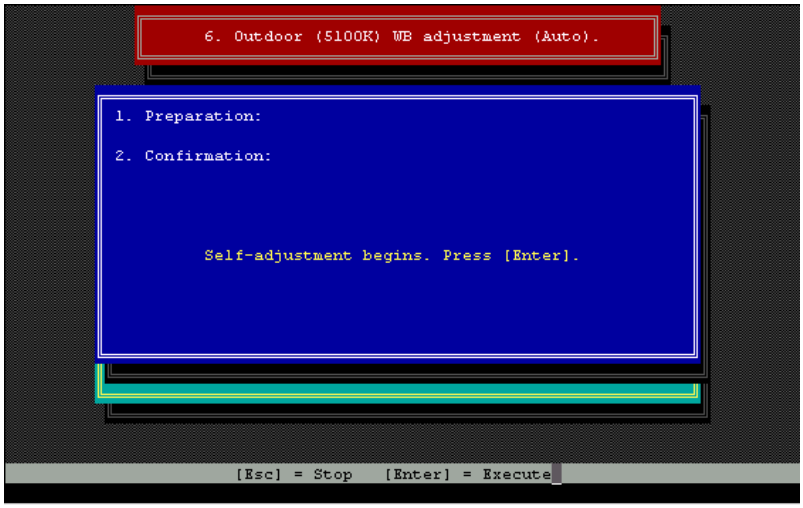


PRESS ENTER KEY, then adjustment is started.

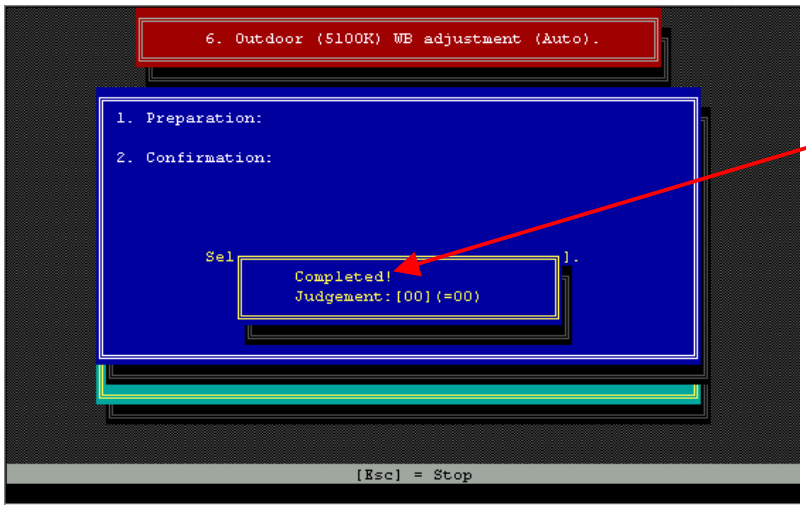


When adjustment is finished, message **"Completed!"** appears and numerical value is changed **"00"**.

### 6-8-3. Cool white (4500K) White Balance Adjustment (Auto)

< In case of NTSC model >

1. Set the Color Conversion filters (LB120 : VFK1347) to CC Filter Holder (VFK1345).

< In case of PAL model >

1. Set the Color Conversion filters (LB80 : VFK1342) and (CC C20 : VFK1887) to CC Filter Holder (VFK1345).

< Common procedure >

2. Set the one Step-down Ring (VFK1346) and two Step Up Rings (VFK1659, VFK1660) to CC Filter Holder as shown in figure.
3. Set the CC Filter Holder with Step-up & down Rings to front of the Lens.

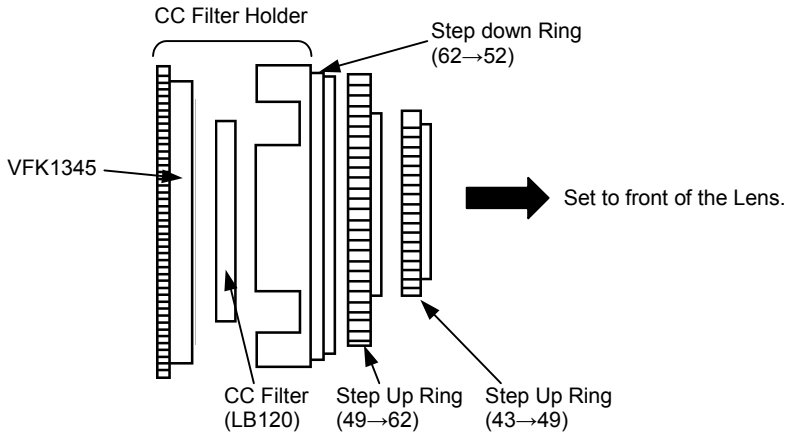


**NOTE: Above figure described in case of NTSC.**

4. Set the AUTO/MANUAL SELECT SW to MANUAL position.
5. Aim the camera recorder at Grayscale Chart under the Halogen lamp condition (3100K, 2000Lux).
6. Execute the ABB by press WHITE BAL button.
7. Set the AUTO/MANUAL SELECT SW to AUTO position (AUTO IRIS & AWB mode).
8. Open the **"Camera adjustment menu"**.
9. Select **"9. White Balance adjustment"** in the Camera adjustment menu, and then press the **"Enter"** key.
10. Select **"7. Cool white (4500K) WB adjustment (Auto)"** in the White balance adjustment menu, and then press the **"Enter"** key.

PRESS ENTER KEY.

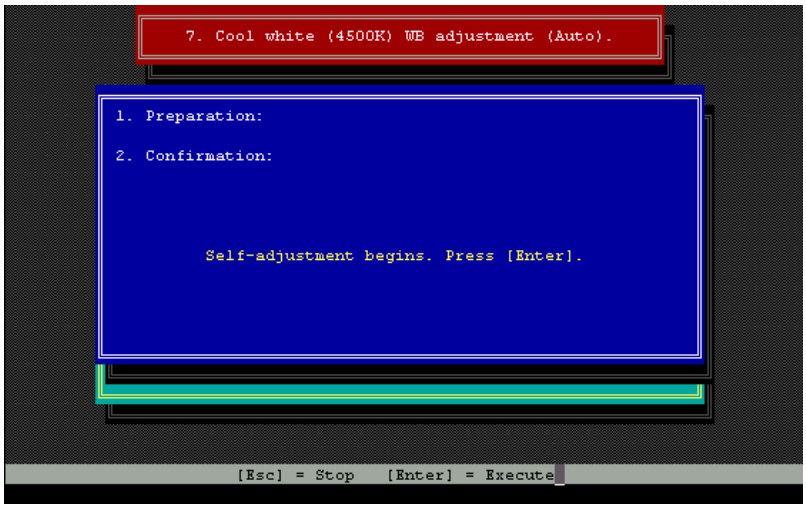


PRESS ENTER KEY, then adjustment is started.

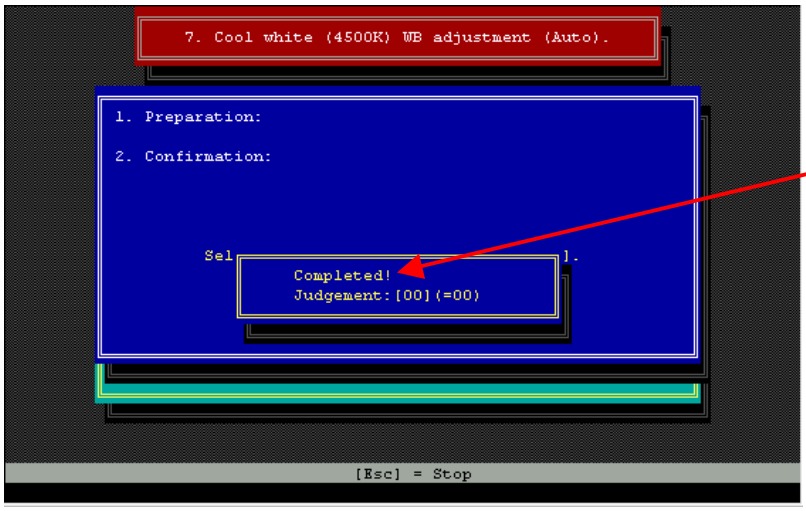


When adjustment is finished, message **"Completed!"** appears and numerical value is changed **"00"**.

### 6-8-4. Warm white (3600K) White Balance Adjustment (Auto)

< In case of NTSC model >

1. Set the Color Conversion filters (LB40 : VFK1341) and (LBB2 : VFK1885) to CC Filter Holder (VFK1345).

< In case of PAL model >

1. Set the Color Conversion filters (CC C10 : VFK1886) to CC Filter Holder (VFK1345).

< Common procedure >

2. Set the one Step-down Ring (VFK1346) and two Step Up Rings (VFK1659, VFK1660) to CC Filter Holder as shown in figure.
3. Set the CC Filter Holder with Step-up & down Rings to front of the Lens.

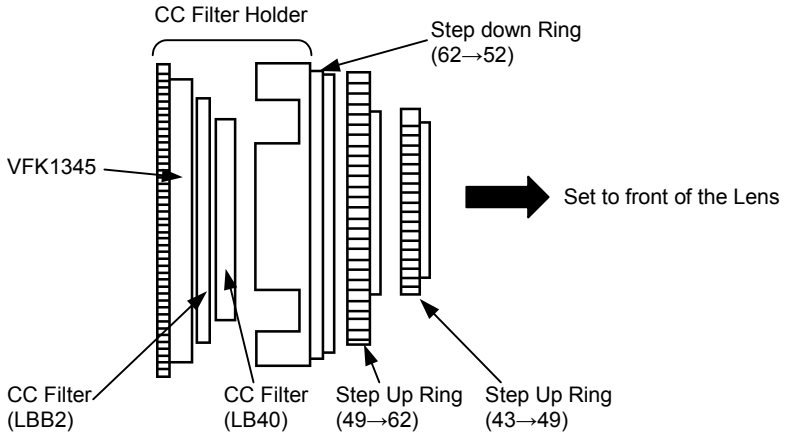


**NOTE: Above figure described in case of NTSC.**

4. Set the AUTO/MANUAL SELECT SW to MANUAL position.
5. Aim the camera recorder at Grayscale Chart under the Halogen lamp condition (3100K, 2000Lux).
6. Execute the ABB by press WHITE BAL button.
7. Set the AUTO/MANUAL SELECT SW to AUTO position (AUTO IRIS & AWB mode).
8. Open the **"Camera adjustment menu"**.
9. Select **"9. White Balance adjustment"** in the Camera adjustment menu, and then press the **"Enter"** key.
10. Select **"8. Wram white (3600K) WB adjustment (Auto)"** in the White balance adjustment menu, and then press the **"Enter"** key.

PRESS ENTER KEY.

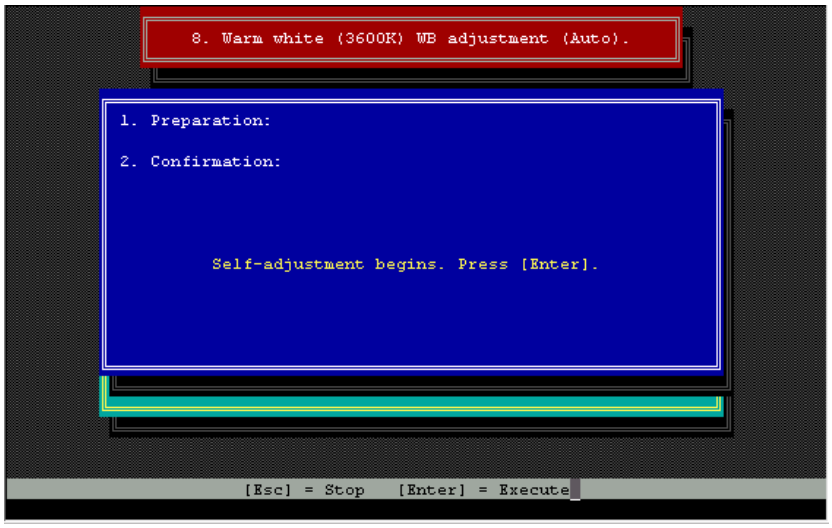


PRESS ENTER KEY, then adjustment is started.

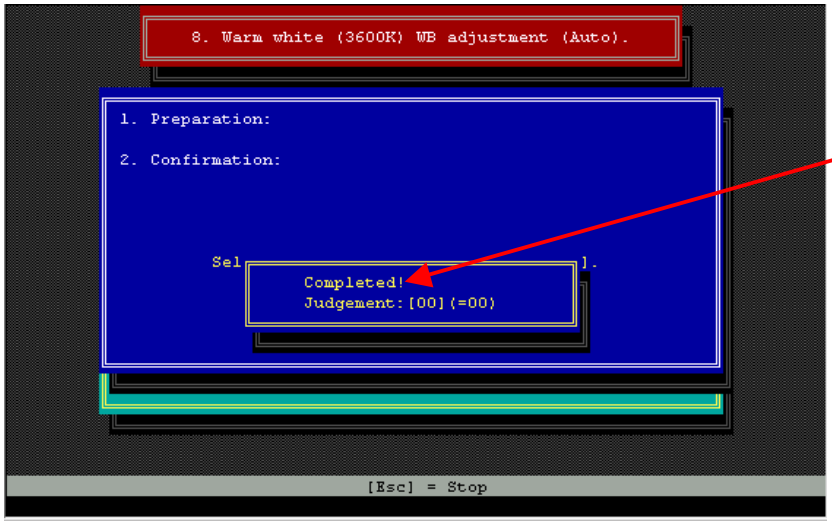


When adjustment is finished, message **"Completed!"** appears and numerical value is changed **"00"**.

## 6-9. White Shading Adjustment

This adjustment is automatically executed.

1. Aim the camera recorder at white paper (use clear white paper) under the Halogen lamp condition.
2. Shoot the white paper to fully fill entire screen.
3. Set the AUTO/MANUAL SELECT switch to MANUAL position.
4. Press WHITE BAL button until mark "◪◿" displayed as flash condition to execute white balance adjustment.
5. Keep pressing WHITE BAL button "◪◿" display switching over to the light from the flash.
6. Press ZEBRA button to display the marker on the screen (When press the ZEBRA button, a zebra pattern is displayed and when pushing the ZEBRA button once again, it displays a marker at the center of the screen).
7. Press MULTI-DIAL to display the F-number.
8. Adjust the MULTI-DIAL to the luminance level to become 70 to 80% (luminance level can be confirm by numerical value, which displayed lower left corner of screen).
9. Open the **"Camera adjustment menu"** in EVR software.
10. Select **"10. White Shading Adjustment (Auto)"** in the Camera adjustment menu, and then press the **"Enter"** key.
11. Set to CAMERA mode in camera recorder follow the message **"Auto / Manually set to CAMERA mode."**, and then press the **"Enter"** key.

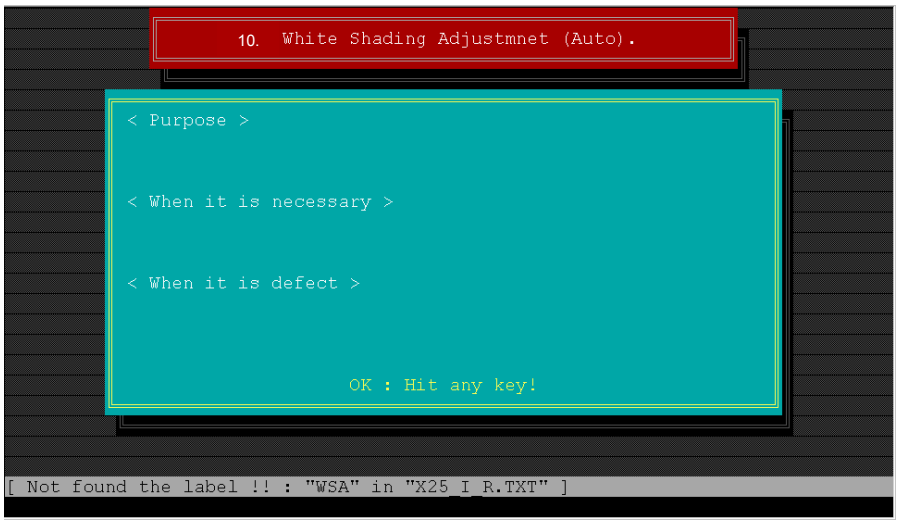


PRESS ENTER KEY.

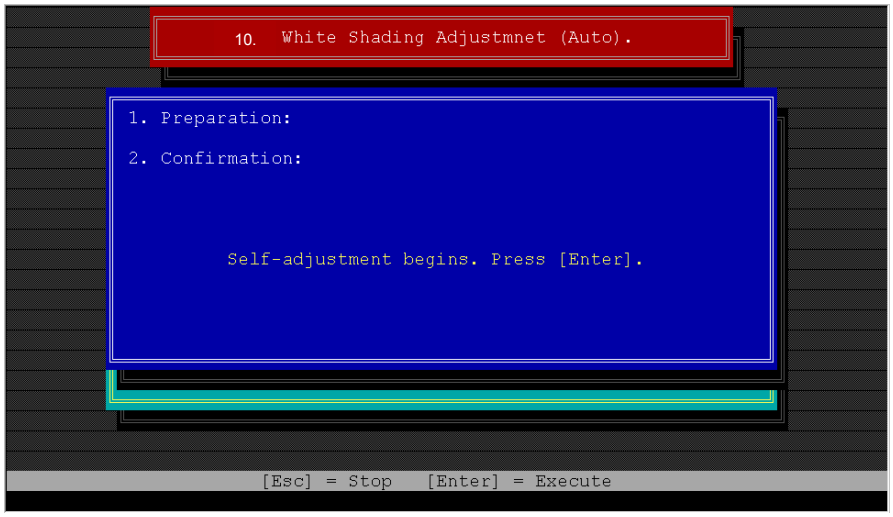


PRESS ENTER KEY,
then adjustment is started.

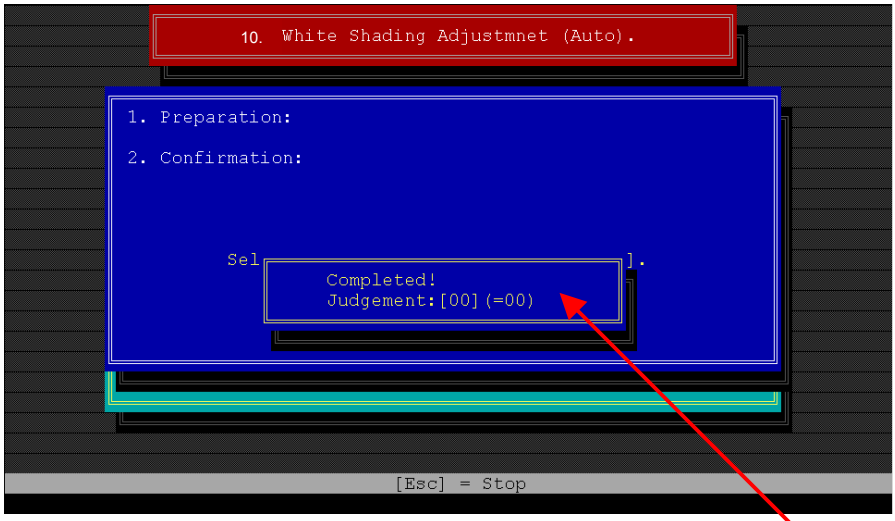


When adjustment is finished, message **"Completed!"** appears and numerical value is changed **"00"**.
The program goes to Camera adjustment menu automatically.

# 7. VTR ADJUSTMENT PROCEDURE

Be sure to save the VTR adjustment data into the Personal Computer, before performing adjustment.
Perform the all PC-EVR adjustments, by referring to procedures on PC screen.

## 7-1. Sensitivity adj of Tape sensors Adjustment (AUTO)

This adjustment is automatically executed.

1. Open the REC Inhibit Tab (SAVE side) of Tape End/Beg. Sensor Cassette (VFK1217).
2. Insert the Tape End/Beg. Sensor Cassette (VFK1217) into the camera recorder.
3. Open the **"Video adjustment menu"**.
4. Select **"1. Sensitivity adj of Tape sensors (Auto)"** in the Video adjustment menu, and then press the **"Enter"** key.

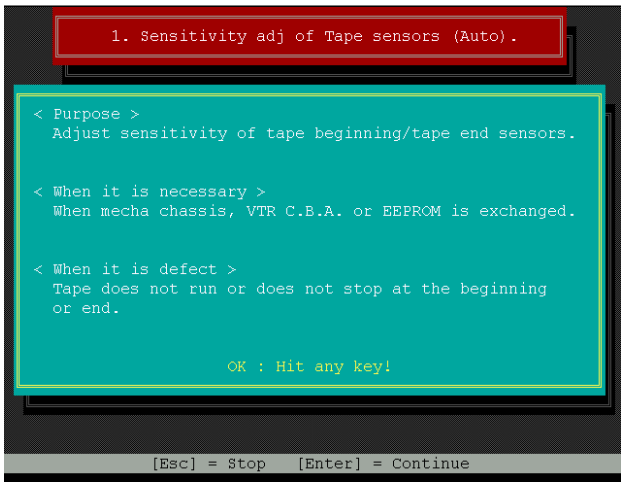


PRESS ENTER KEY.

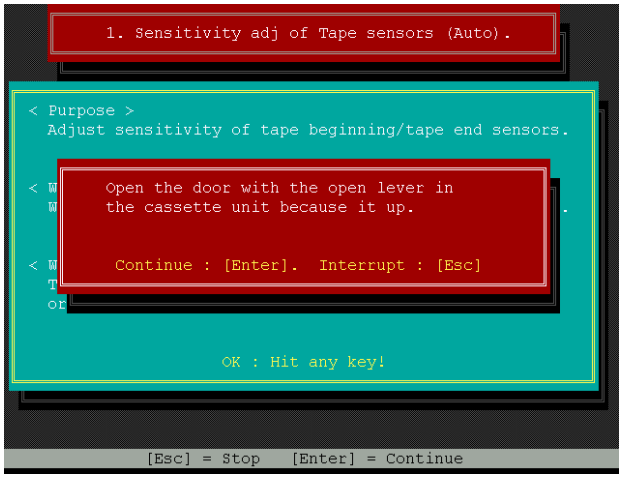


Unnecessary open the door, PRESS ENTER KEY.

5. Set to CAMERA mode in camera recorder following the message **"Auto / Manually set to CAMERA mode."**, and then press the **"Enter"** key.

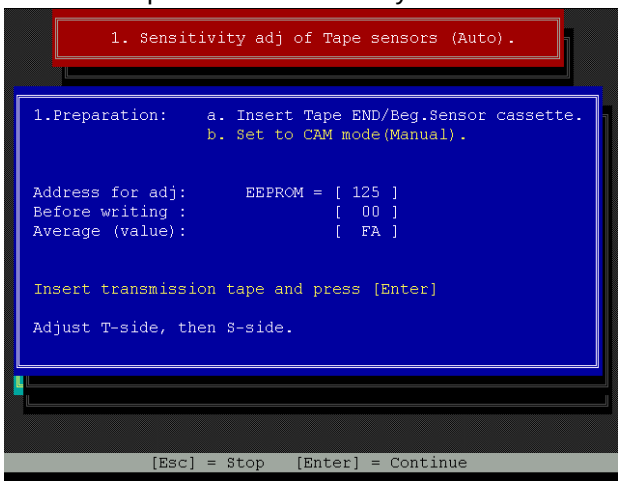


In case of the **"Tape END / Beg. Sensor cassette (VFK1217)"** is already inserted, PRESS ENTER KEY.

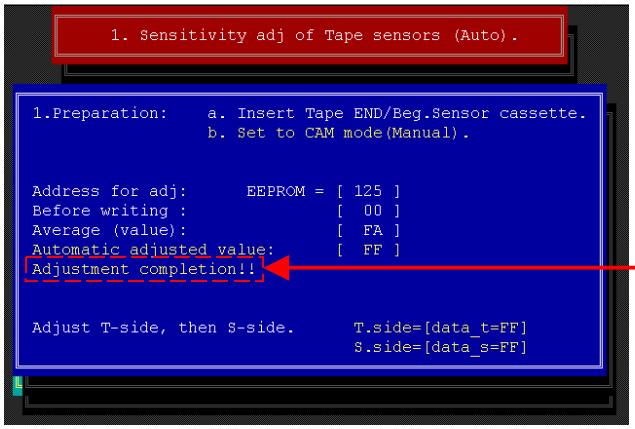


Please confirm this message appears on screen, then adjustment is finished.

## 7-2. PG shifter Adjustment (AUTO)

This adjustment is automatically executed.

1. Connect the oscilloscope to **"HID"** and **"SPA"** on the VFK1308P.
2. Insert the DV color bar alignment tape (VFM3010EDS: NTSC or VFM3110EDS: PAL) into the camera recorder.
3. Open the **"Video adjustment menu"**.
4. Select **"2. PG shifter adjustment (Auto)"** in the Video adjustment menu, and then press the **"Enter"** key.
5. Set to VCR mode in camera recorder follow the message **"Manually set to VCR mode."**, and then press the **"Enter"** key.

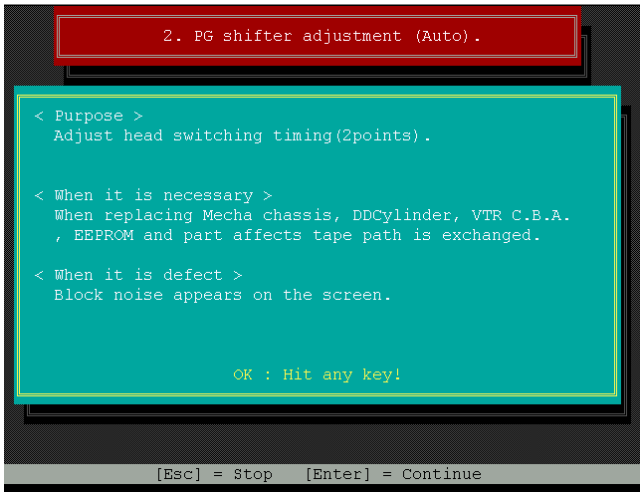


PRESS ENTER KEY.

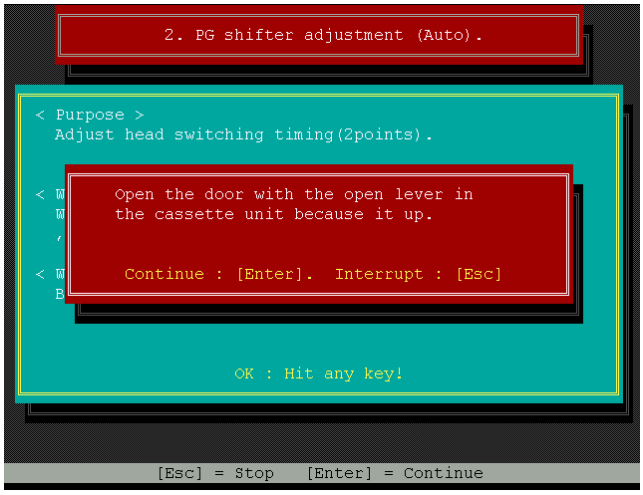


It is unnecessary to open the door, PRESS ENTER KEY.

In case the DV color bar alignment tape is already inserted, PRESS ENTER KEY, then adjustment is started.

**NOTE:**

When the screen change to the following screen, camera recorder goes to STBY ON from STBY OFF mode. Press ENTER key after the camera recorder change to STBY ON mode completely.

After finishing adjustment, please confirm that the portion **"T"** is within the specification as shown in figure with an oscilloscope.

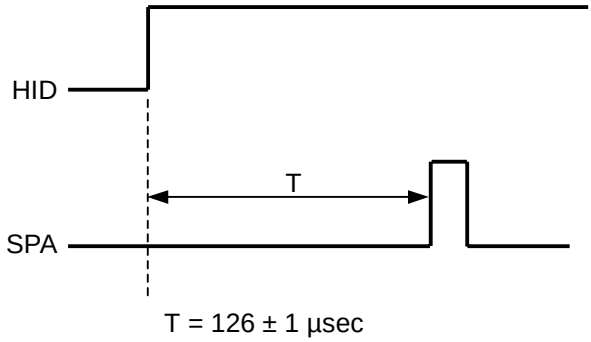

## 7-3. Luminance level Adjustment

1. Connect the (WFM: NTSC model / oscilloscope: PAL model) to VIDEO OUT with 75ohm termination.
2. Open the **"Video adjustment menu"**.
3. Select **"3. Luminance level adjustment"** in the Video adjustment menu, and then press the **"Enter"** key.
4. Set to CAMERA mode in camera recorder following the message **"Auto / Manually set to CAMERA mode."**, and then press the **"Enter"** key.

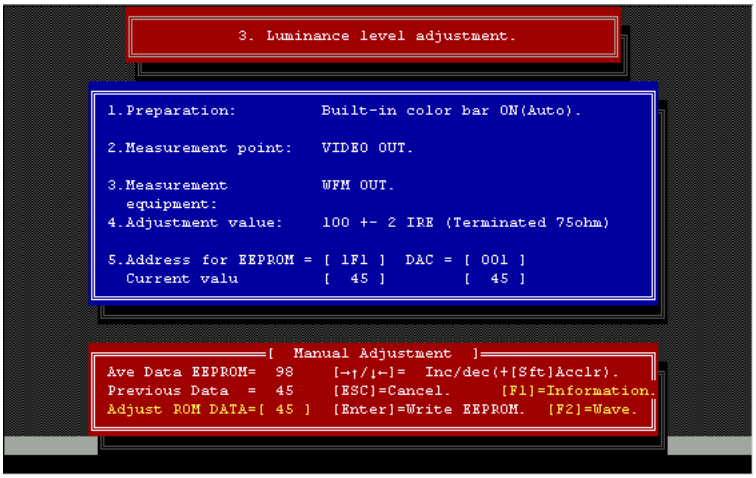


**NOTE:**
This figure describes the NTSC model.

5. Adjust the arrow keys on PC so that the Y level becomes (100±2 IRE: NTSC model / 700±10 mVp-p: PAL model).

**Note:** 1) Y level can be adjusted by pressing arrow keys on keyboard.
2) The waveform(figure) can be displayed by pressing F2 key.

6. When adjustment is finished, press ENTER key to white the adjusted data write to EEPROM.

## 7-4. Chroma level Adjustment

1. Connect the (WFM: NTSC model / oscilloscope: PAL model) to VIDEO OUT with 75ohm termination.
2. Open the **"Video adjustment menu"**.
3. Select **"4. Chroma level adjustment"** in the Video adjustment menu, and then press the **"Enter"** key.
4. Set to CAMERA mode in camera recorder follow the message **"Auto / Manually set to CAMERA mode."**, and then press the **"Enter"** key.

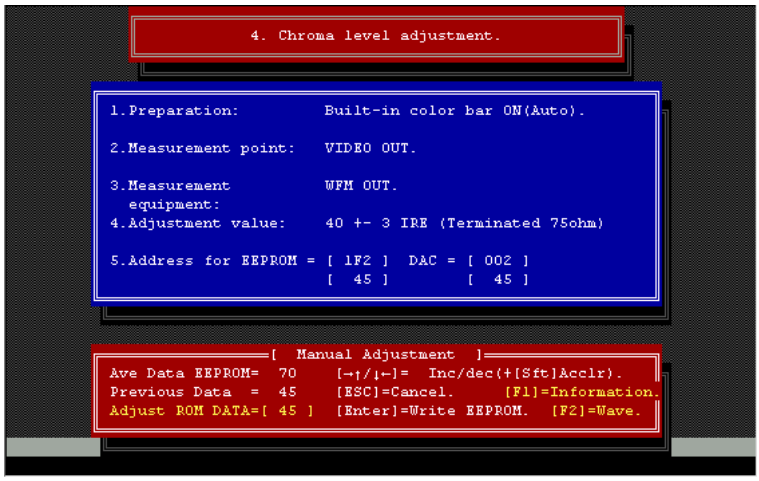


**NOTE:**
This figure describes the NTSC model.

5. Adjust the arrow keys on PC so that the C level becomes (40±3: NTSC model / 300±20 mVp-p: PAL model).

**Note:** 1) C level can be adjusted by pressing arrow keys on keyboard.
2) The waveform(figure) can be displayed by pressing F2 key.

6. When adjustment is finished, press ENTER key to white the adjusted data to EEPROM.

# 8. LCD ADJUSTMENT PROCEDURE

Be sure to save the VTR adjustment data into the Personal Computer, before performing adjustment.
Perform the all PC-EVR adjustments, by referring to procedures on PC screen.

**Note:** Set to CAMERA mode in camera recorder.
Set the VTR TEST (SW103) switch on VFK1308P to L position.

## 8-1. PLL Adjustment

1. Connect the oscilloscope to **"MON_PLL"** on the VFK1308P.
2. Open the **"LCD adjustment menu"**.
3. Select **"1. PLL adjustment"** in the LCD adjustment menu, and then press the **"Enter"** key.

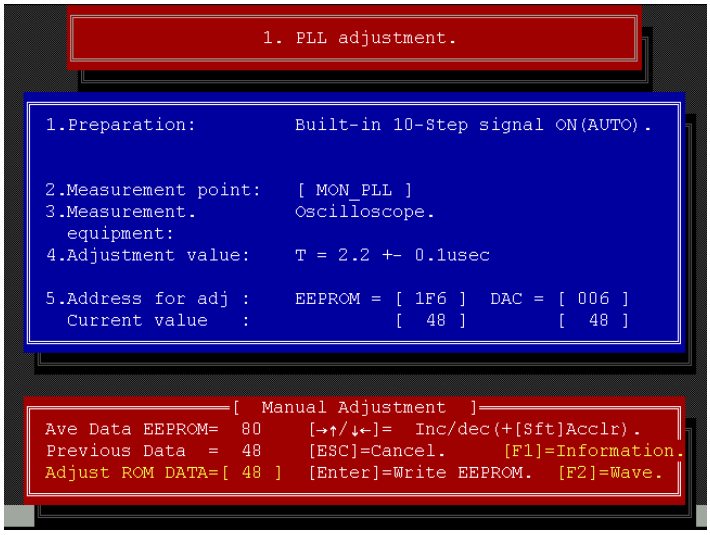


4. Adjust the arrow keys on PC so that the width (T) becomes 2.2±0.1µsec as shown in figure on screen.

**Note:**
1) Width (T) can be adjusted by pressing arrow keys on keyboard.
2) Waveform (figure) can be displayed by pressing F2 key.
5. When adjustment is finished, press ENTER key to white adjusted data to EEPROM.

## 8-2. Pedestal Level Adjustment

1. Connect the oscilloscope to **"MON_G"** on the VFK1308P.
2. Open the **"LCD adjustment menu"**.
3. Select **"2. Pedestal Level adjustment"** in the LCD adjustment menu, and then press the **"Enter"** key.

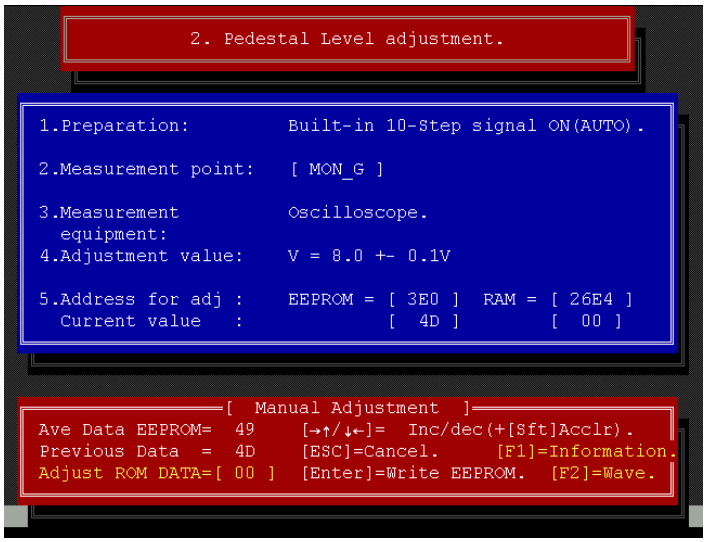


4. Adjust the arrow keys on PC so that the differential amplitude both 0 step-level (portion **"a"** in figure) to becomes 8.0±0.1V as shown in figure on screen.

**Note:**
1) Level (a) can be by pressing arrow keys on keyboard.
2) Waveform (figure) can be displayed by pressing F2 key.
5. When adjustment is finished, press ENTER key to white adjusted data to EEPROM.

## 8-3. Contrast Adjustment

1. Connect the oscilloscope to **“MON_G”** on the VFK1308P.
2. Open the **“LCD adjustment menu”**.
3. Select **“3. Contrast adjustment”** in the LCD adjustment menu, and then press the **“Enter”** key.

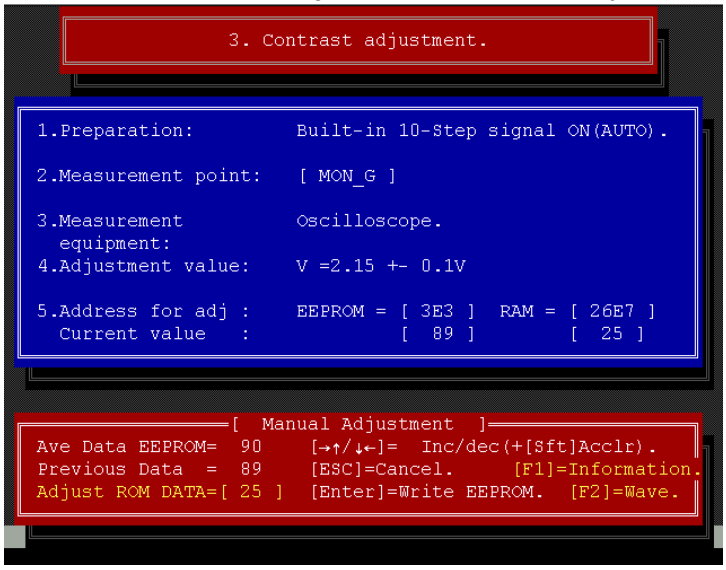


4. Adjust the arrow keys on PC so that the differential amplitude between 0 step-level and 7 step-level (portion **“V”** in figure) becomes 2.15±0.1V as shown in figure on screen.

**Note:**

1) Level (V) can be adjusted by pressing arrow keys on keyboard.
2) Waveform (figure) can be displayed by pressing F2 key.
3) Please measure the opposite side of waveform.

5. When adjustment is finished, press ENTER key to white adjusted data to EEPROM.

## 8-4. Sub contrast Adjustment

1. Connect the oscilloscope to **"MON_CB"** and **"MON_G"** on the VFK1308P.
2. Open the **"LCD adjustment menu"**.
3. Select **"4. Sub contrast adjustment"** in the LCD adjustment menu, and then press the **"Enter"** key.

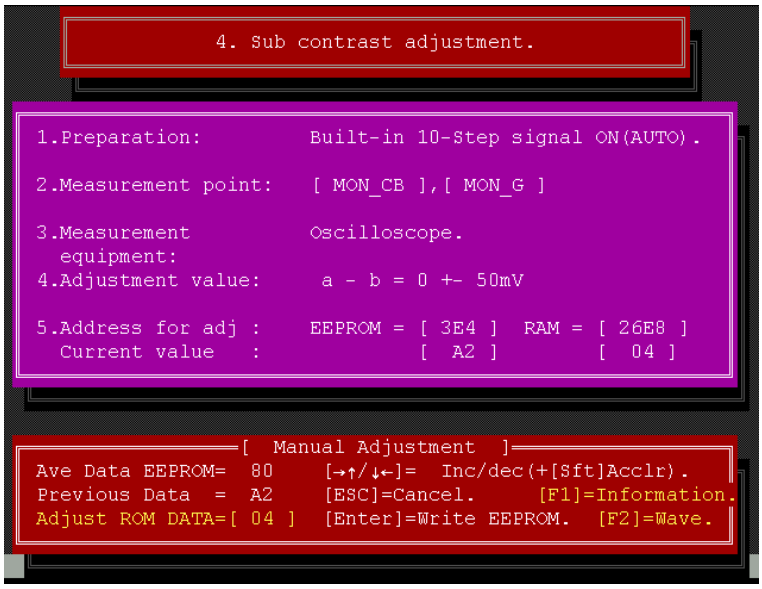


4. Adjust the arrow keys on PC so that the level difference between **"a"** (MON_CB) and **"b"** (MON_G) becomes 0±50mV as shown in figure on screen.

**Note:**

1) Signal level can be adjusted by pressing arrow keys on keyboard.
2) Waveform (figure) can be displayed by pressing F2 key.
3) Please measure the opposite side of waveform. MON G is reference level.

5. When adjustment is finished, press ENTER key to white adjusted data to EEPROM, then change the display indicated as below.

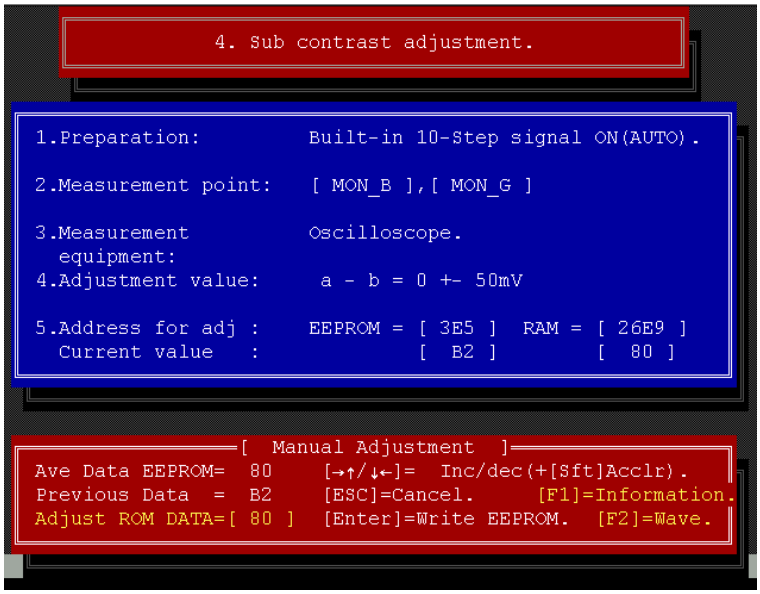


6. Connect the oscilloscope to **"MON_B"** and **"MON_G"** on the VFK1308P.
7. Adjust the arrow keys on PC so that the level difference between **"a"** (MON_B) and **"b"** (MON_G) to become 0±50mV as shown in figure on screen.

**Note:**

1) Signal level can be adjusted by pressing arrow keys on keyboard.
2) Waveform (figure) can be displayed by pressing F2 key.
3) Please measure the opposite side of waveform. MON G is reference level.

8. When adjustment is finished, press ENTER key to white adjusted data to EEPROM.

## 8-5. White balance Adjustment

1. Connect the oscilloscope to **"MON_CB"** and **"MON_G"** on the VFK1308P.
2. Open the **"LCD adjustment menu"**.
3. Select **"5. White balance adjustment"** in the LCD adjustment menu, and then press the **"Enter"** key.

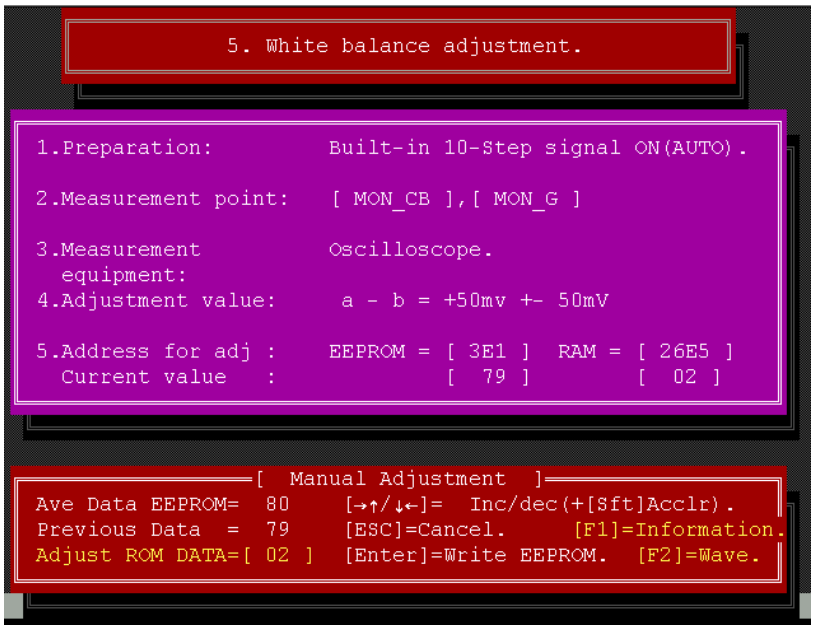


4. Adjust the arrow keys on PC so that the level difference between **"a"** (MON_CB) and **"b"** (MON_G) becomes +50mV±50mV as shown in figure on screen.

**Note:**

1) Signal level can be adjusted by pressing arrow keys on keyboard.
2) Waveform (figure) can be displayed by pressing F2 key.
3) Please measure the opposite side of waveform. MON G is reference level.

5. When adjustment is finished, press ENTER key to white adjusted data to EEPROM, then change the display indicated as below.

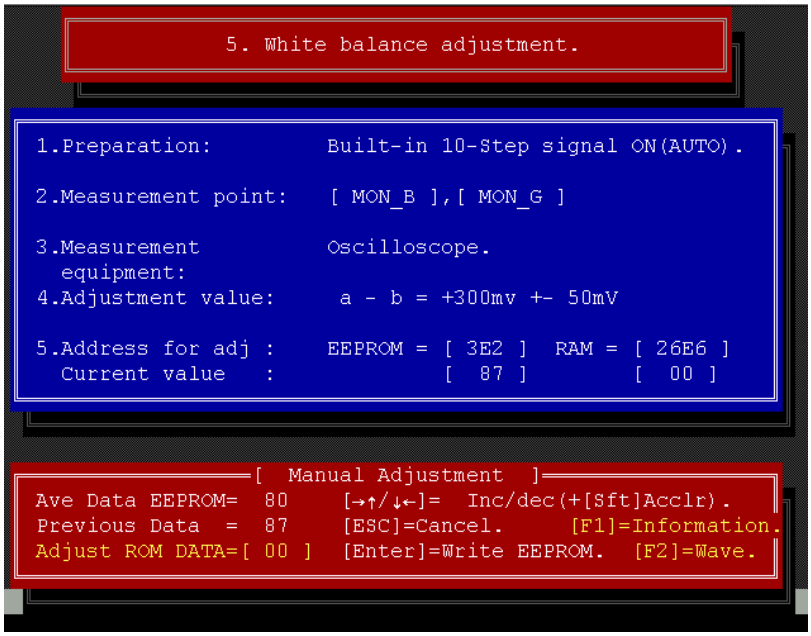


6. Connect the oscilloscope to **"MON_B"** and **"MON_G"** on the VFK1308P.
7. Adjust the arrow keys on PC so that the level difference between **"a"** (MON_B) and **"b"** (MON_G) becomes +300mV±50mV as shown in figure on screen.

**Note:**

1) Signal level can be adjusted by pressing arrow keys on keyboard.
2) Waveform (figure) can be displayed by pressing F2 key.
3) Please measure the opposite side of waveform. MON G is reference level.

8. When adjustment is finished, press ENTER key to write adjusted data to EEPROM.

# 9. EVF ADJUSTMENT PROCEDURE

Be sure to save the VTR adjustment data into the Personal Computer, before performing adjustment.
Perform the all PC-EVR adjustments, by referring to procedures on PC screen.

**Note:** Set to CAMERA mode in camera recorder.
Set the VTR TEST (SW103) switch on VFK1308P to L position.

## 9-1. EVF PLL Adjustment

1. Connect the oscilloscope to **"F_OE"** on the VFK1308P.
2. Open the **"EVF adjustment menu"**.
3. Select **"1. PLL adjustment"** in the EVF adjustment menu, and then press the **"Enter"** key.

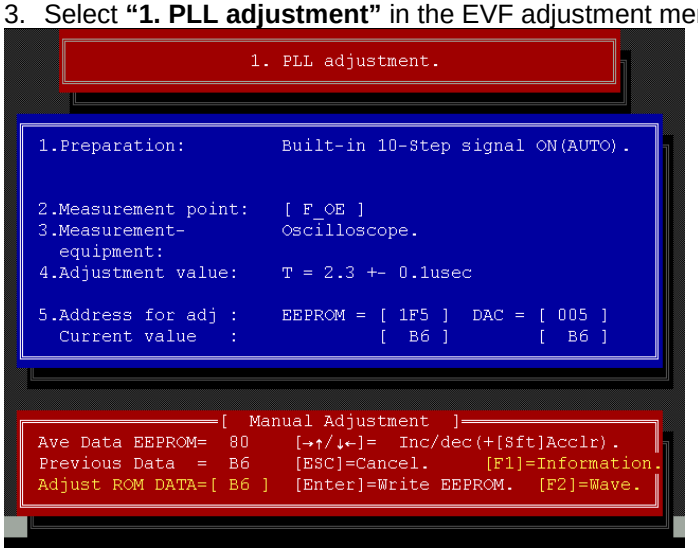


4. Adjust the arrow keys on PC so that the width (T) becomes 2.3±0.1µsec as shown in figure on screen.

**Note:**
1) Width (T) can be adjusted by pressing arrow keys on keyboard.
2) Waveform (figure) can be displayed by pressing F2 key.

5. When adjustment is finished, press ENTER key to write adjusted data to EEPROM.

## 9-2. EVF Contrast Adjustment

1. Set SW109 to **"FLUSH"** side on the VFK1308P.
2. Connect the oscilloscope to **"VCC9"** on the VFK1308P.
3. Open the **"EVF adjustment menu"**.
4. Select **"2. Contrast adjustment"** in the EVF adjustment menu, and then press the **"Enter"** key.

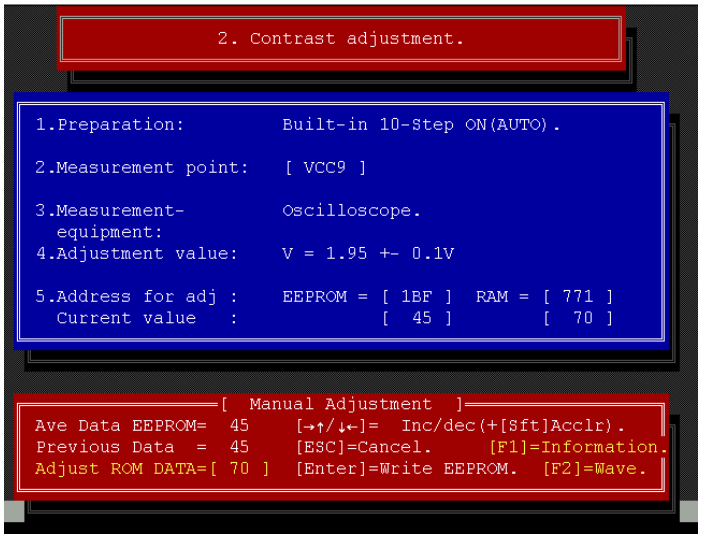


5. Adjust the arrow keys on PC so that the differential amplitude between 1 step-level and 10 step-level (portion **"V"** in figure) becomes 1.95±0.1V as shown in figure on screen.

**Note:** 1) Level (V) can be adjusted by pressing arrow keys on keyboard.
2) Waveform (figure) can be displayed by pressing F2 key.
3) Please measure the opposite side of waveform.

6. When adjustment is finished, press ENTER key to write adjusted data to EEPROM.

## 9-3. EVF Pedestal Level Adjustment

1. Set SW109 to **“FLUSH”** side on the VFK1308P.
2. Connect the oscilloscope to **“VCC9”** on the VFK1308P.
3. Open the **“EVF adjustment menu”**.
4. Select **“3. Pedestal Level adjustment”** in the EVF adjustment menu, and then press the **“Enter”** key.

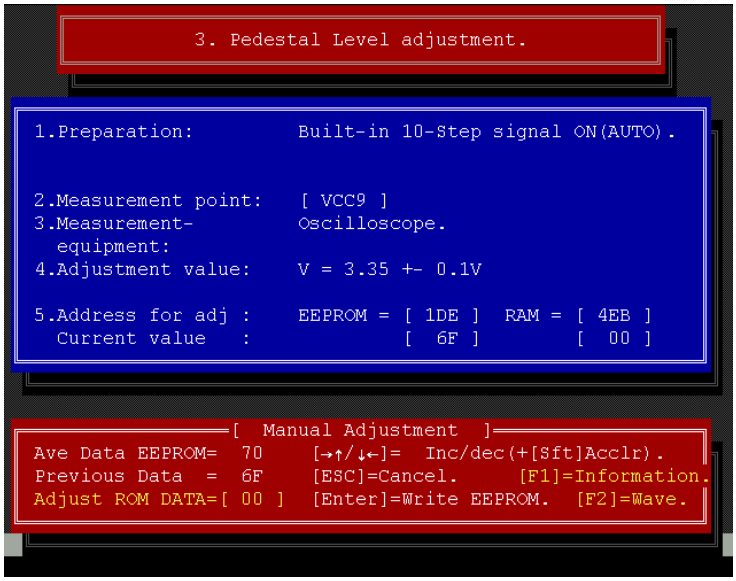


5. Adjust the arrow keys on PC so that the differential amplitude both 10 step-level (portion **“V”** in figure) becomes 3.35±0.1V as shown in figure on screen.

**Note:**

1) Level (V) can be adjusted by pressing arrow keys on keyboard.
2) Waveform (figure) can be displayed by pressing F2 key.

6. When adjustment is finished, press ENTER key to write adjusted data to EEPROM.

## 9-4. EVF Sub contrast Adjustment

1. Set SW109 to **"FLUSH"** side on the VFK1308P.
2. Connect the oscilloscope to **"VCC41"** and **"VCC9"** on the VFK1308P.
3. Open the **"EVF adjustment menu"**.
4. Select **"4. Sub contrast adjustment"** in the EVF adjustment menu, and then press the **"Enter"** key.

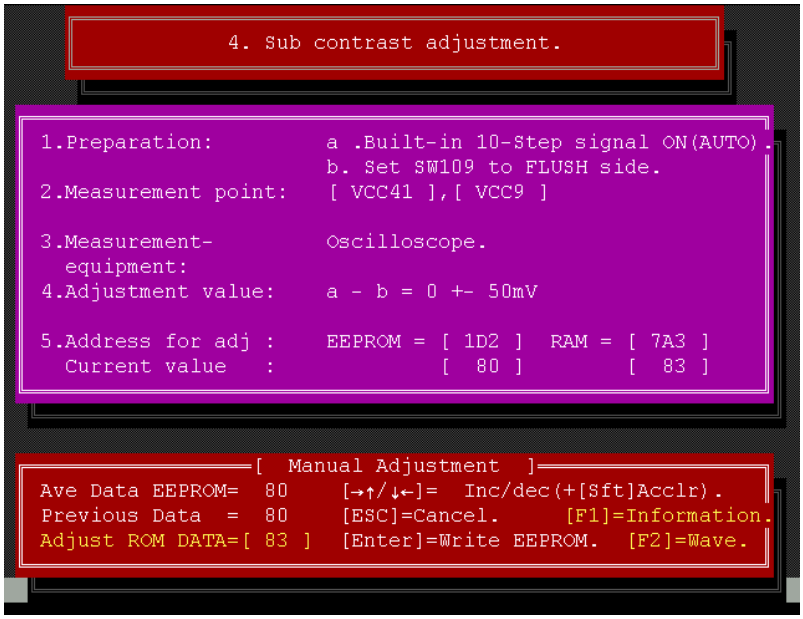


5. Adjust the arrow keys on PC so that the level difference between **"a"** (VCC41) and **"b"** (VCC9) becomes 0±50mV as shown in figure on screen.

**Note:**

1) Signal level can be adjusted by pressing arrow keys on keyboard.
2) Waveform (figure) can be displayed by pressing F2 key.
3) Please measure the opposite side of waveform. VCC9 is reference level.

6. When adjustment is finished, press ENTER key to write adjusted data to EEPROM, then change the display indicated as below.

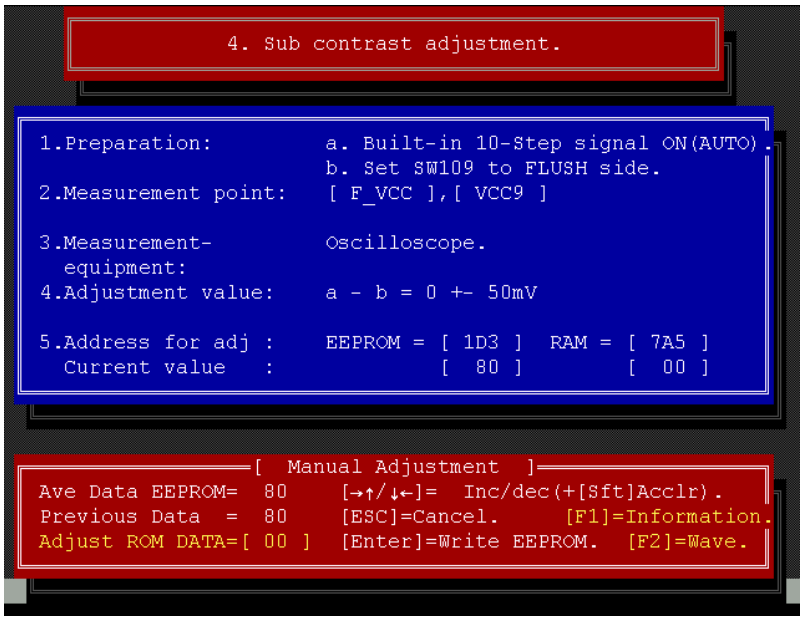


7. Connect the oscilloscope to **"F_VCC"** and **"VCC9"** on the VFK1308P.
8. Adjust the arrow keys on PC so that the level difference between **"a"** (F_VCC) and **"b"** (VCC9) becomes 0±50mV as shown in figure on screen.

**Note:**

1) Signal level can be adjusted by pressing arrow keys on keyboard.
2) Waveform (figure) can be displayed by pressing F2 key.
3) Please measure the opposite side of waveform. VCC9 is reference level.

9. When adjustment is finished, press ENTER key to white adjusted data to EEPROM.

## 9-5. EVF White balance Adjustment

1. Set SW109 to **"FLUSH"** side on the VFK1308P.
2. Connect the oscilloscope to **"VCC41"** and **"VCC9"** on the VFK1308P.
3. Open the **"EVF adjustment menu"**.
4. Select **"5. White balance adjustment"** in the EVF adjustment menu, and then press the **"Enter"** key.

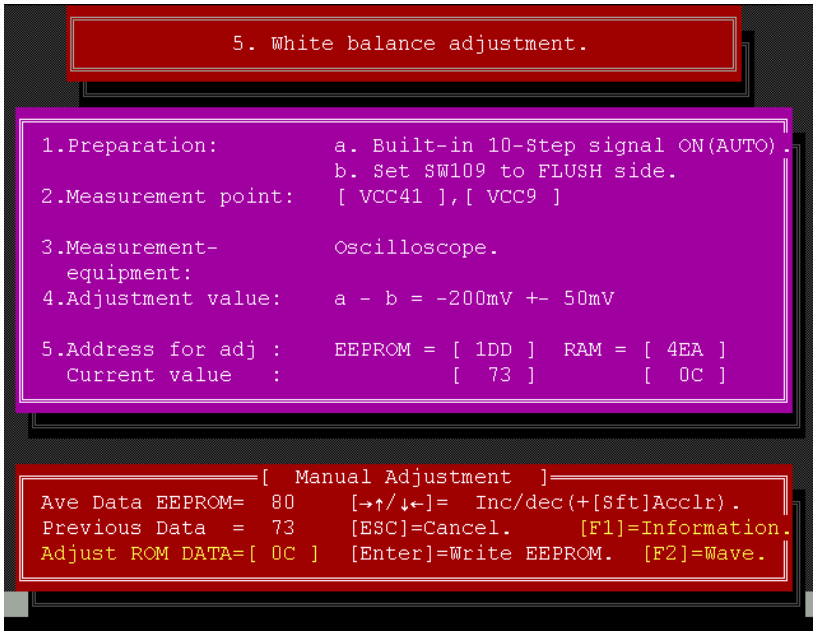


5. Adjust the arrow keys on PC so that the level difference between **"a"** (VCC41) and **"b"** (VCC9) becomes -200mV±50mV as shown in figure on screen.

**Note:**

1) Signal level can be adjusted by pressing arrow keys on keyboard.
2) Waveform (figure) can be displayed by pressing F2 key.
3) Please measure the opposite side of waveform. VCC9 is reference level.

6. When adjustment is finished, press ENTER key to white adjusted data to EEPROM, then change the display indicated as below.

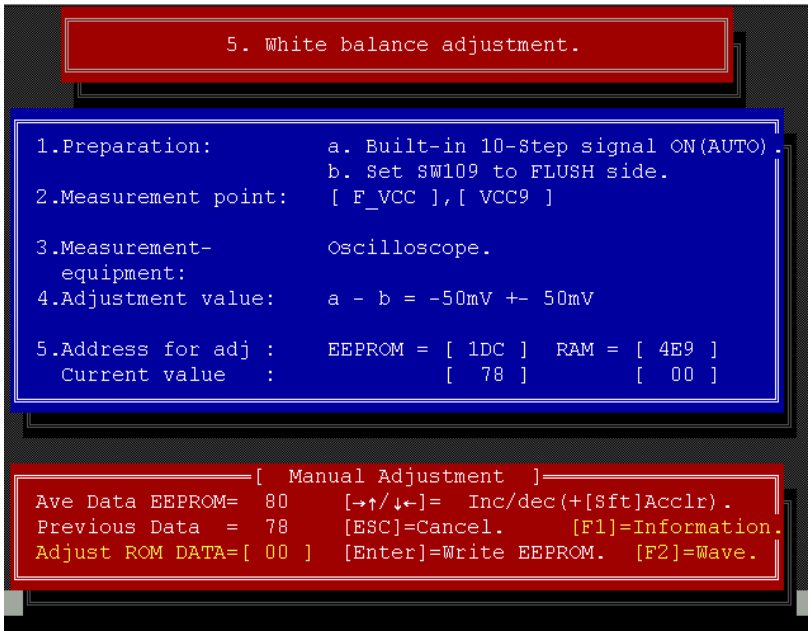


7. Connect the oscilloscope to **"F_VCC"** and **"VCC9"** on the VFK1308P.
8. Adjust the arrow keys on PC so that the level difference between **"a"** (F_VCC) and **"b"** (VCC9) to become –50mV±50mV as shown in figure on screen.

**Note:**

1) Signal level can be adjusted by pressing arrow keys on keyboard.
2) Waveform (figure) can be displayed by pressing F2 key.
3) Please measure the opposite side of waveform. VCC9 is reference level.

9. When adjustment is finished, press ENTER key to white adjusted data to EEPROM.

# SECTION 5

# BLOCK DIAGRAMS

## CONTENTS

**<< AG-DVC30/DVC32/DVC33 >>**

OVERALL BLOCK DIAGRAM.....BLK-1
SENSOR/PROCESS (CAMERA) BLOCK DIAGRAM .....BLK-2
LENS DRIVE (CAMERA) BLOCK DIAGRAM.....BLK-3
VIDEO (VTR) BLOCK DIAGRAM .....BLK-4
MONITOR (VTR / LCD / EVF) BLOCK DIAGRAM .....BLK-5
CONTROL (VTR) BLOCK DIAGRAM.....BLK-6

**<< AG-MYA30G >>**

OVERALL BLOCK DIAGRAM.....BLK-7

# OVERALL BLOCK DIAGRAM

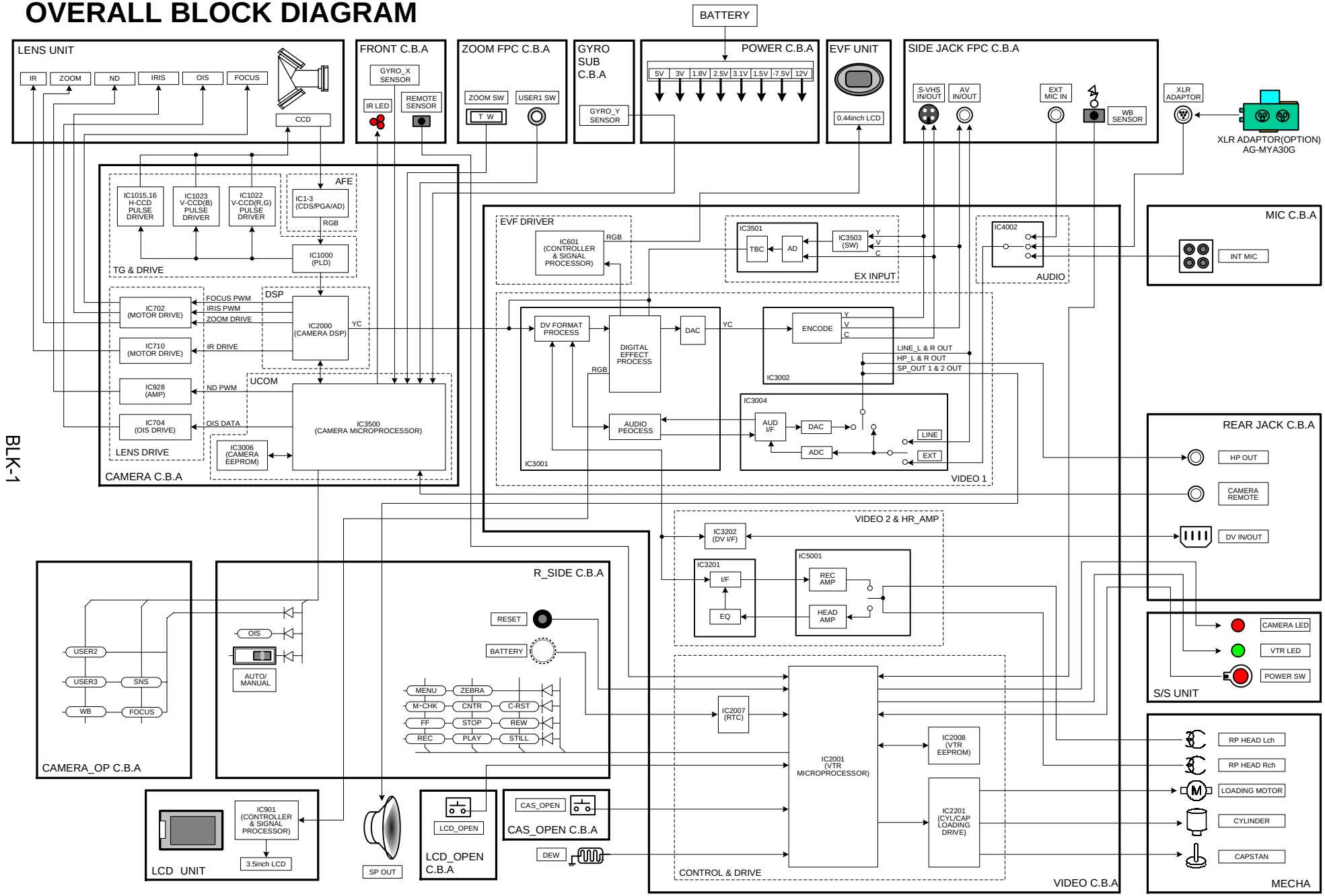


BLK-1

# SENSOR/PROCESS(CAMERA) BLOCK DIAGRAM

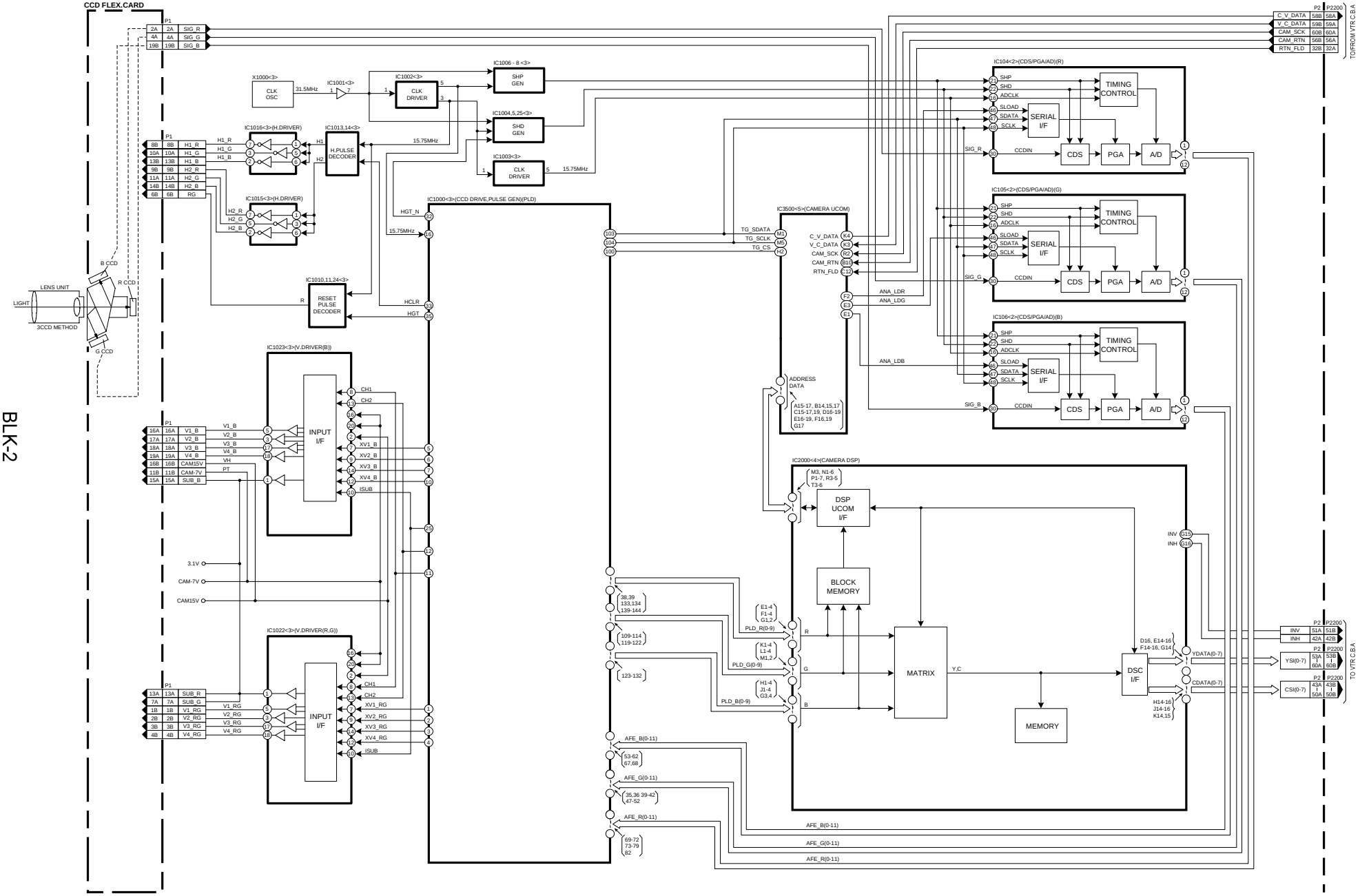


BLK-2

# LENS DRIVE(CAMERA) BLOCK DIAGRAM

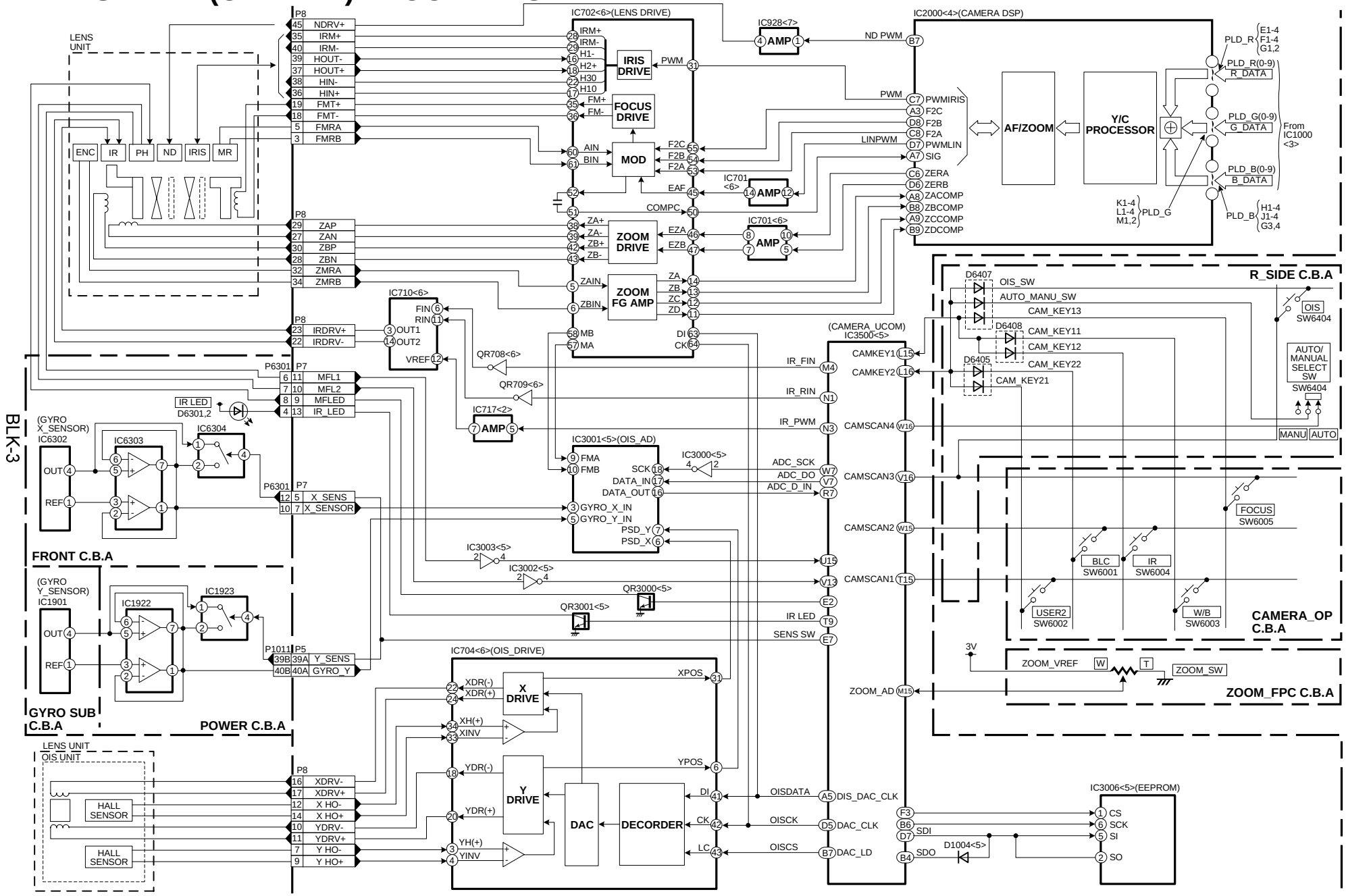


BLK-3

# VIDEO(VTR) BLOCK DIAGRAM

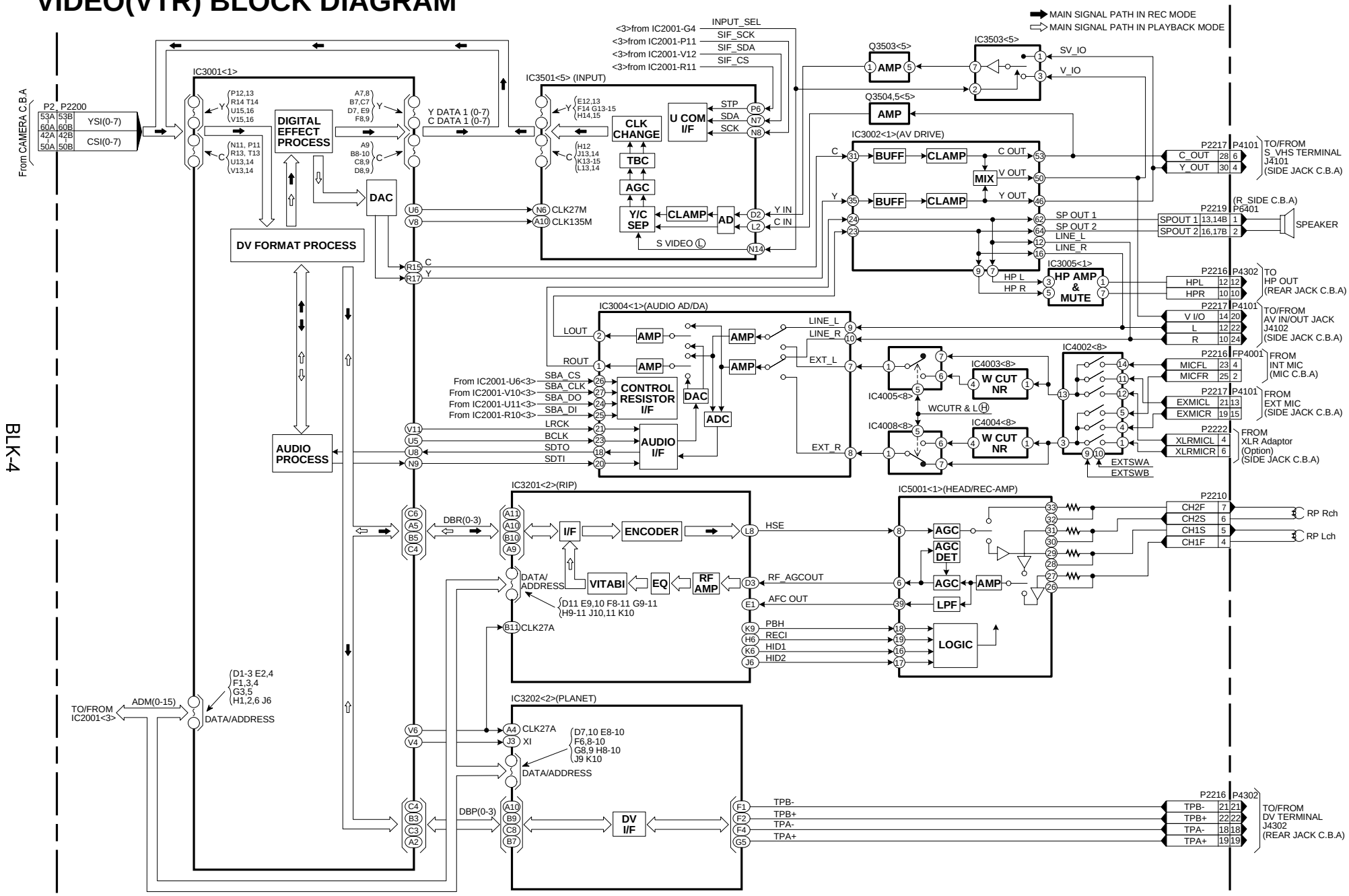

# MONITOR(VTR/LCD/EVF) BLOCK DIAGRAM

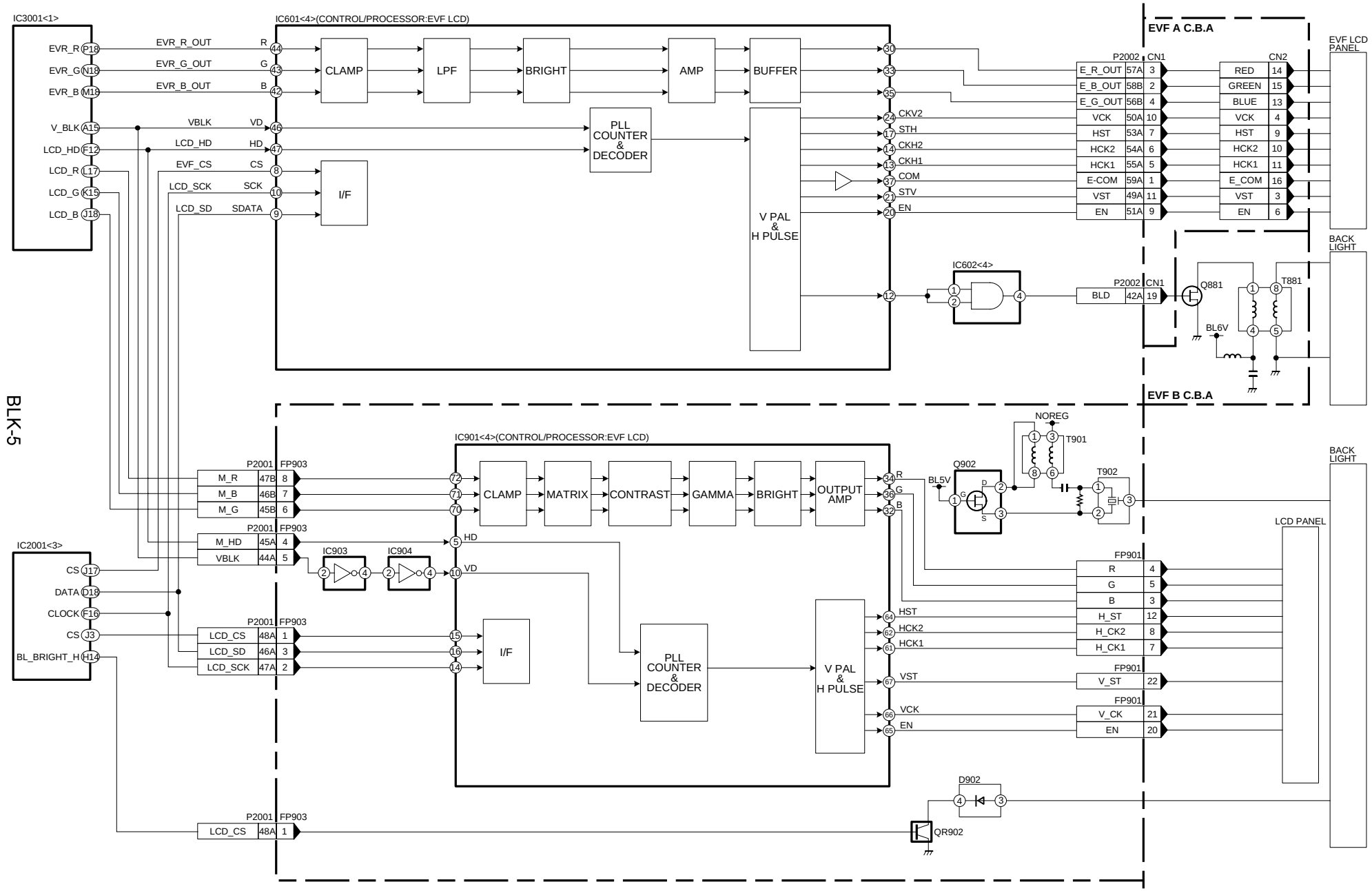


BLK-5

# CONTROL(VTR) BLOCK DIAGRAM

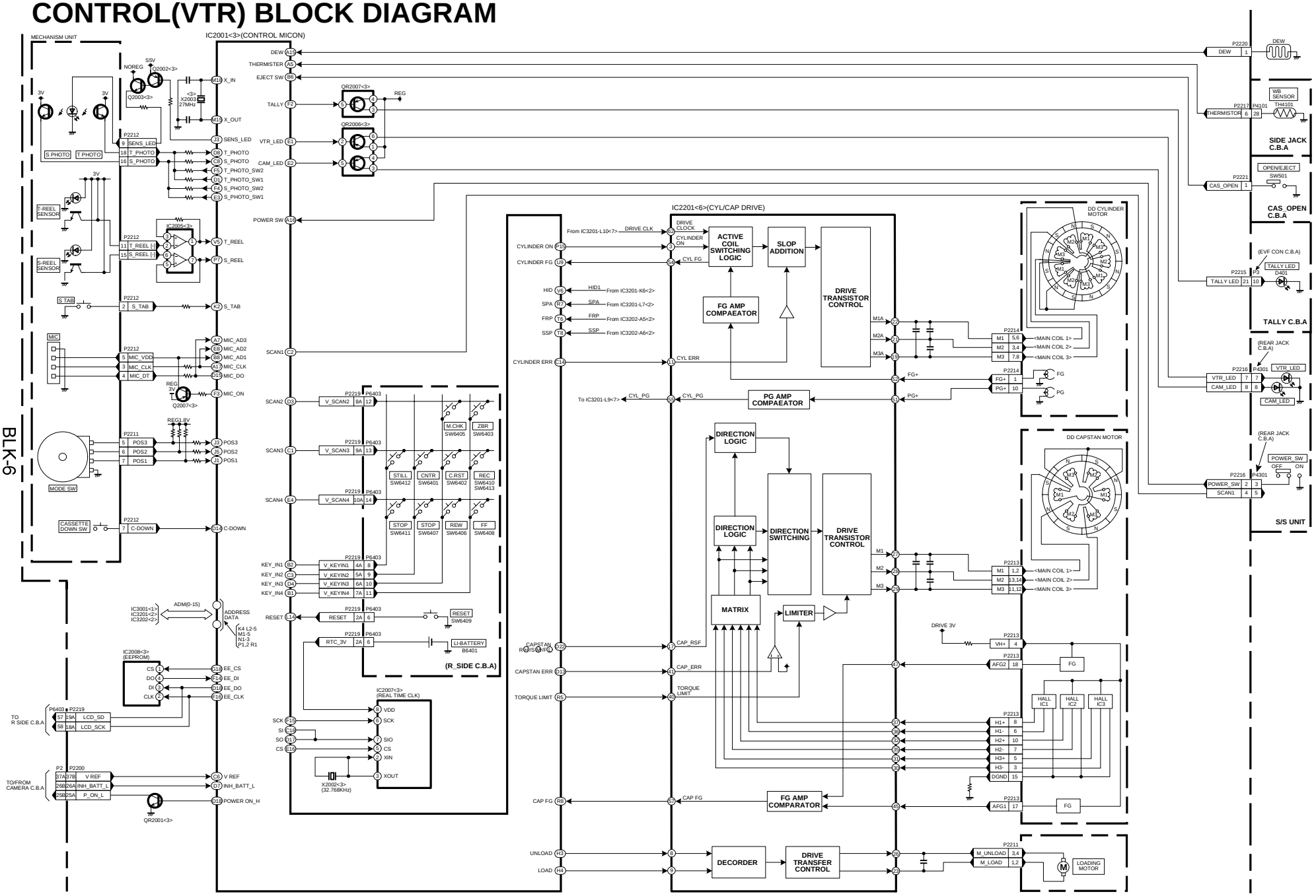

# OVERALL BLOCK DIAGRAM (AG-MYA30G)

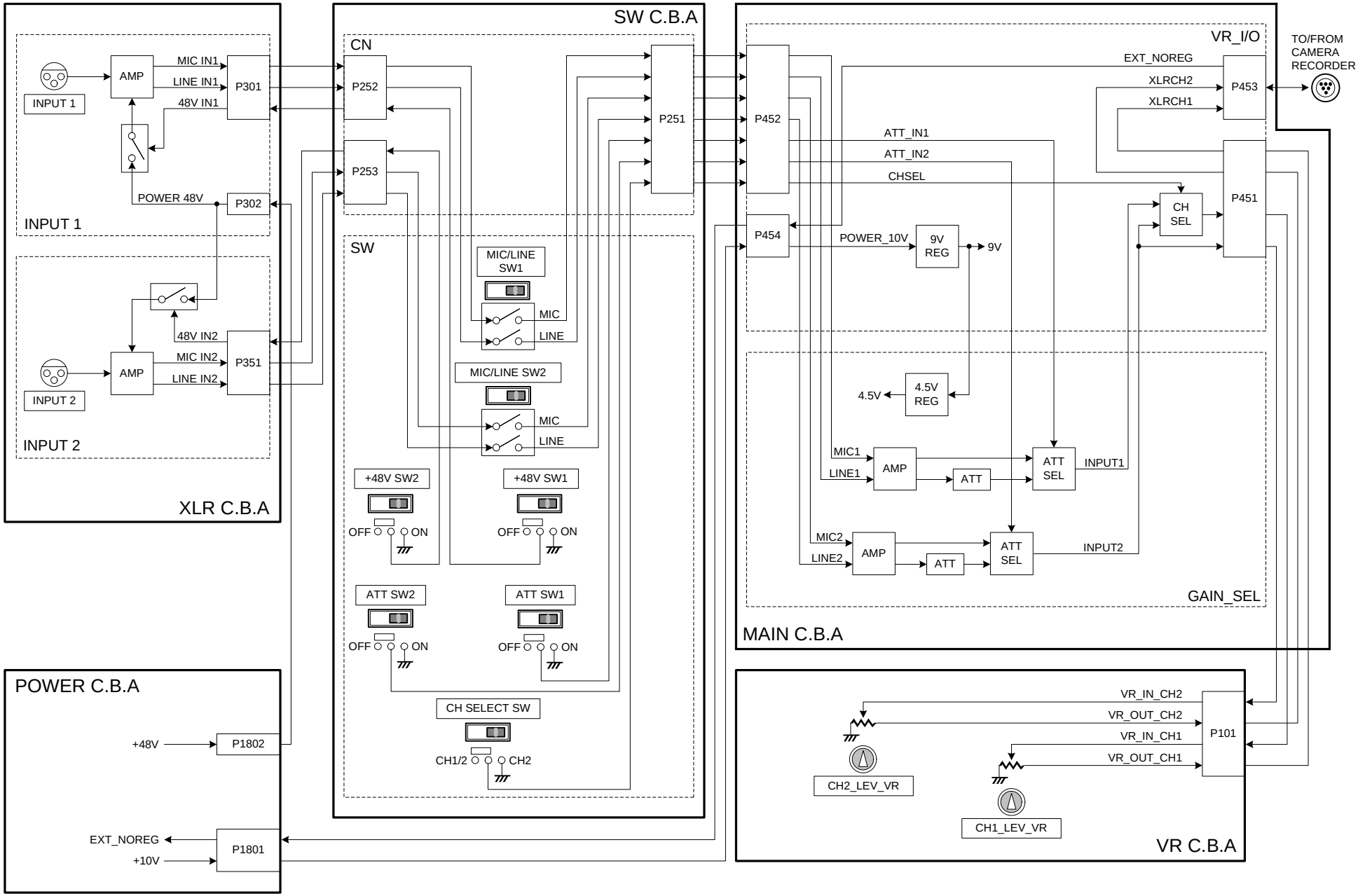

# SECTION 6

# SCHEMATIC DIAGRAMS

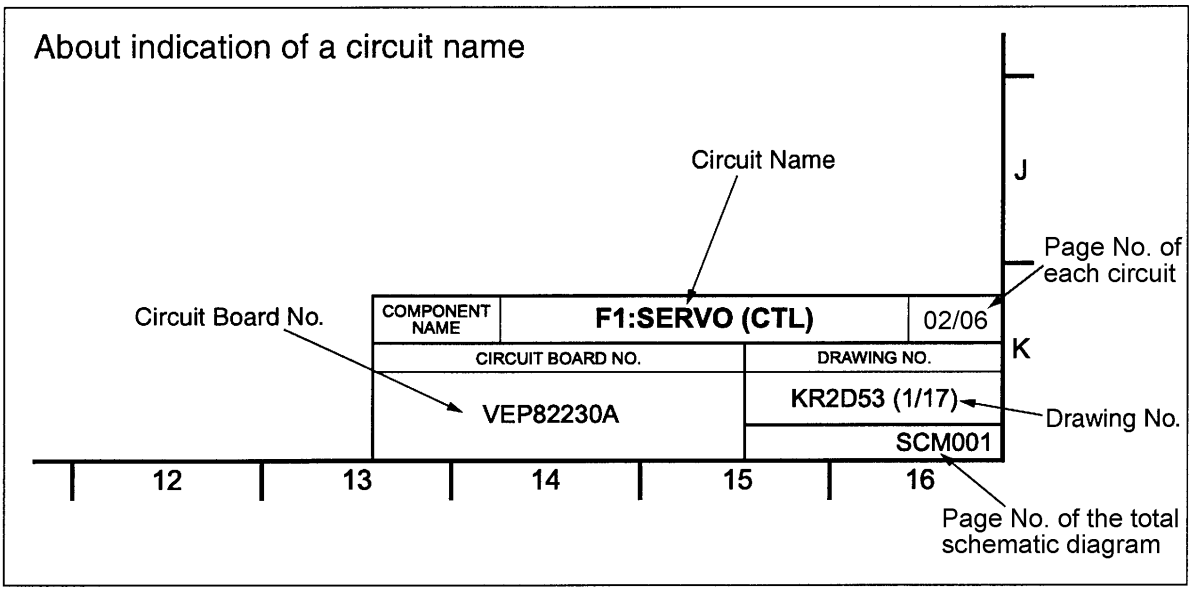


**NOTE:**
BE SURE TO MAKE YOUR ORDERS OF REPLACEMENT PARTS ACCORDING TO PARTS LIST, SECTION8

**CAUTION**

THE [ ] MARK INDICATES THE PRIMARY CIRCUIT TO DISTINGUISH THE PRIMARY FROM THE SECONDARY CIRCUIT.
PAY ATTENTION NOT TO RECEIVE AN ELECTRIC SHOCK DURING REPAIR AND SERVICE OF THE PRODUCTS.

**IMPORTANT SAFETY NOTICE:**
COMPONENTS IDENTIFIED WITH THE MARK ⚠ HAVE THE SPECIAL CHARACTERISTICS FOR SAFETY.
WHEN REPLACING ANY OF THESE COMPONENTS, USE ONLY THE SAME TYPE.

# CONTENTS


## <<AG-DVC30P/E DVC32EN DVC33MC>>

### INTERCONNECTION
INTERCONNECTION (1/1) ..... SCM001

### VTR
VTR (VIDEO_1) (1/9) ..... SCM002
VTR (VIDEO_2) (2/9) ..... SCM003
VTR (CONTROL) (3/9) ..... SCM004
VTR (EVR_DRIVER) (4/9) ..... SCM005
VTR (EX_INPUT) (5/9) ..... SCM006
VTR (DRIVE) (6/9) ..... SCM007
VTR (HR_AMP) (7/9) ..... SCM008
VTR (AUDIO) (8/9) ..... SCM009
VTR (CN) (9/9) ..... SCM010

### CAMERA
CAMERA (SUB_CN) (1/7) ..... SCM011
CAMERA (AFE) (2/7) ..... SCM012
CAMERA (TG & DRIVE) (3/7) ..... SCM013
CAMERA (DSP) (4/7) ..... SCM014
CAMERA (UCOM) (5/7) ..... SCM015
CAMERA (LENS_DRIVE) (6/7) ..... SCM016
CAMERA (ND_DRIVE) (7/7) ..... SCM017

### POWER
POWER (1/2) ..... SCM018
POWER (2/2) ..... SCM019

### R SIDE
R_SIDE (1/2) ..... SCM020
R_SIDE (2/2) ..... SCM021

### CAMERA OP
CAMERA OP (1/1) ..... SCM022

### MENU FPC
MENU FPC (1/1) ..... SCM023

### FRONT
FRONT (1/1) ..... SCM024

### MF FPC
MF FPC (1/1) ..... SCM025

### SIDE JACK FPC
SIDE JACK FPC (1/1) ..... SCM026

### REAR JACK
REAR JACK (1/1) ..... SCM027

### BATTERY
BATTERY (1/1) ..... SCM028

### ZOOM FPC
ZOOM FPC (1/1) ..... SCM029

### ZOOM CON
ZOOM CON (1/1) ..... SCM030

### EVF CON
EVF CON (1/1) ..... SCM031

### MIC
MIC (1/1) ..... SCM032

### MONITOR
MONITOR (1/1) ..... SCM033

### EVF A
EVF A (1/1) ..... SCM034

### EVF B
EVF B (1/1) ..... SCM034

### LCD OPEN
LCD OPEN (1/1) ..... SCM034

### CAS OPEN
CAS OPEN (1/1) ..... SCM034

### TALLY
TALLY (1/1) ..... SCM035

### SUB REC
SUB REC (1/1) ..... SCM035

### DC IN
DC IN (1/1) ..... SCM035

## <<AG-MYA30G;OPTION>>

### XLR
XLR (INPUT 1) (1/2) ..... SCM036
XLR (INPUT 2) (2/2) ..... SCM037

### SW
SW (SW) (1/2) ..... SCM038
SW (CN) (2/2) ..... SCM039

### MAIN
MAIN (GAIN SEL) (1/2) ..... SCM040
MAIN (VR I/O) (2/2) ..... SCM041

### POWER
POWER (1/1) ..... SCM042

### VR
VR (1/1) ..... SCM043

# INTERCONNECTION

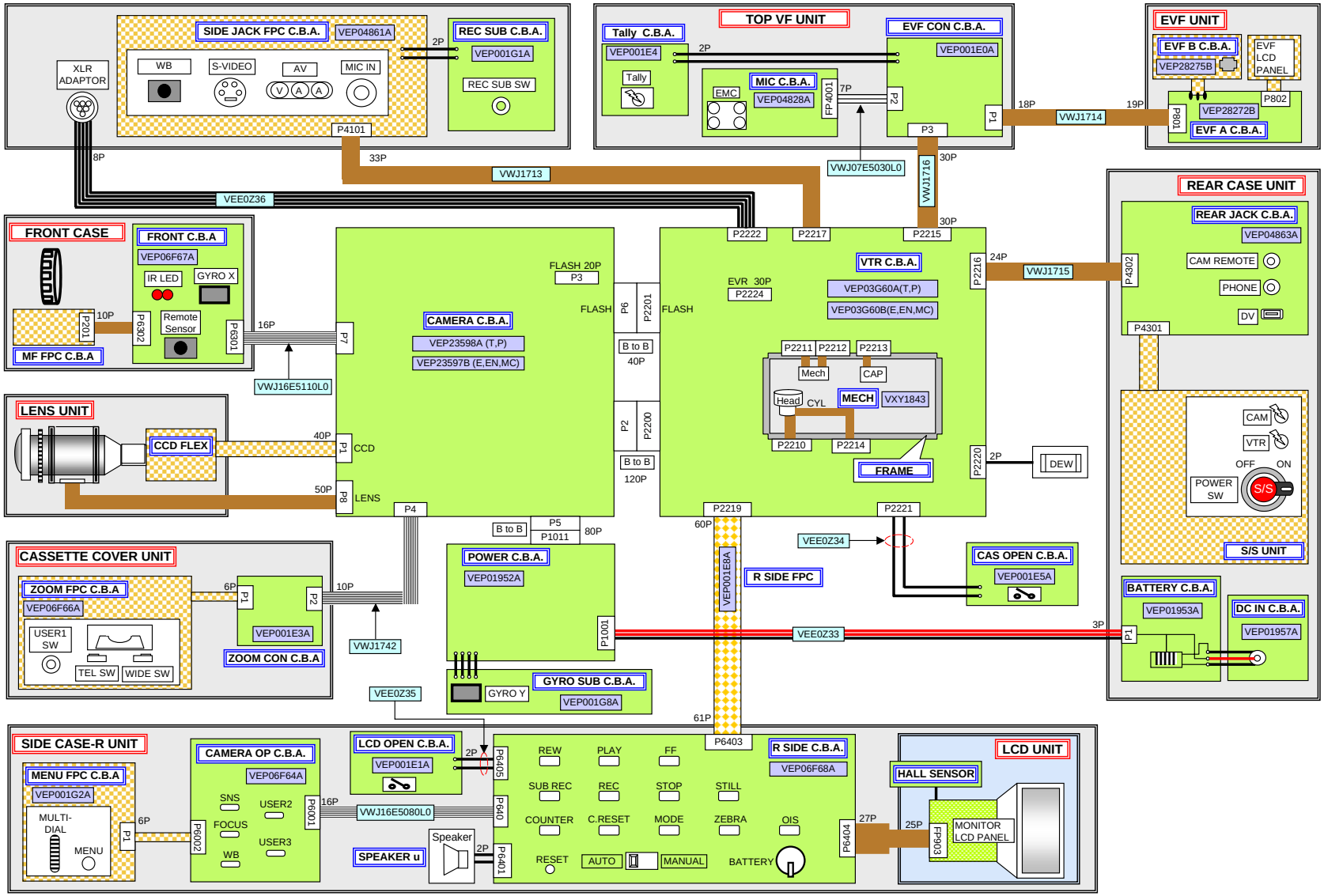


| COMPONENT NAME | INTERCONNECTION | 01/01 |
|---|---|---|
| CIRCUIT BOARD NO. | | DRAWING NO. |
| | | (1/1) |
| | | SCM001 |

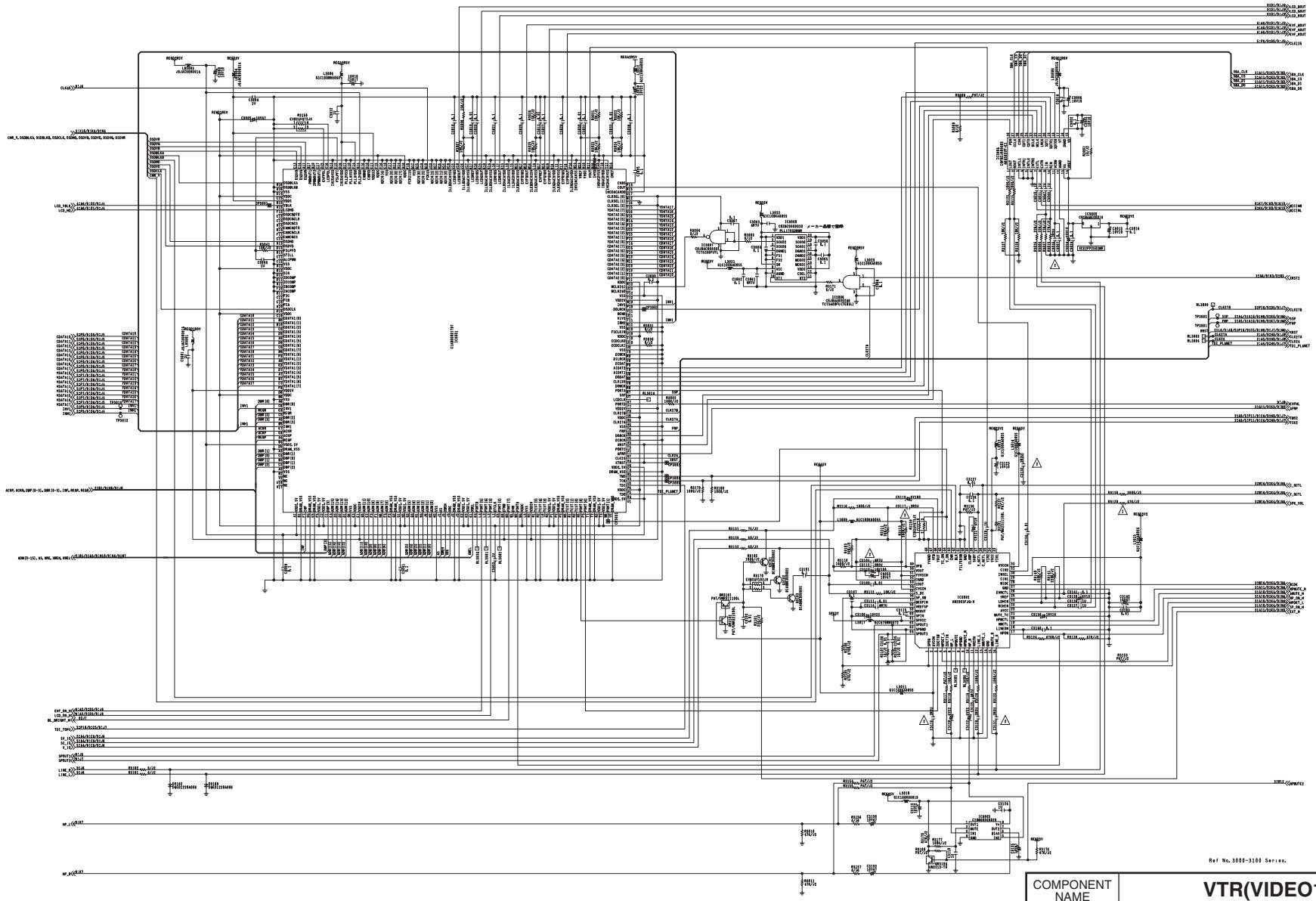

Ref No.3000-3100 Series.

| COMPONENT NAME | VTR(VIDEO1) | 01/09 |
|---|---|---|
| CIRCUIT BOARD NO. | | DRAWING NO. |
| VEP03G60A/B | | KR3A0069 (1/9) |
| | | SCM002 |

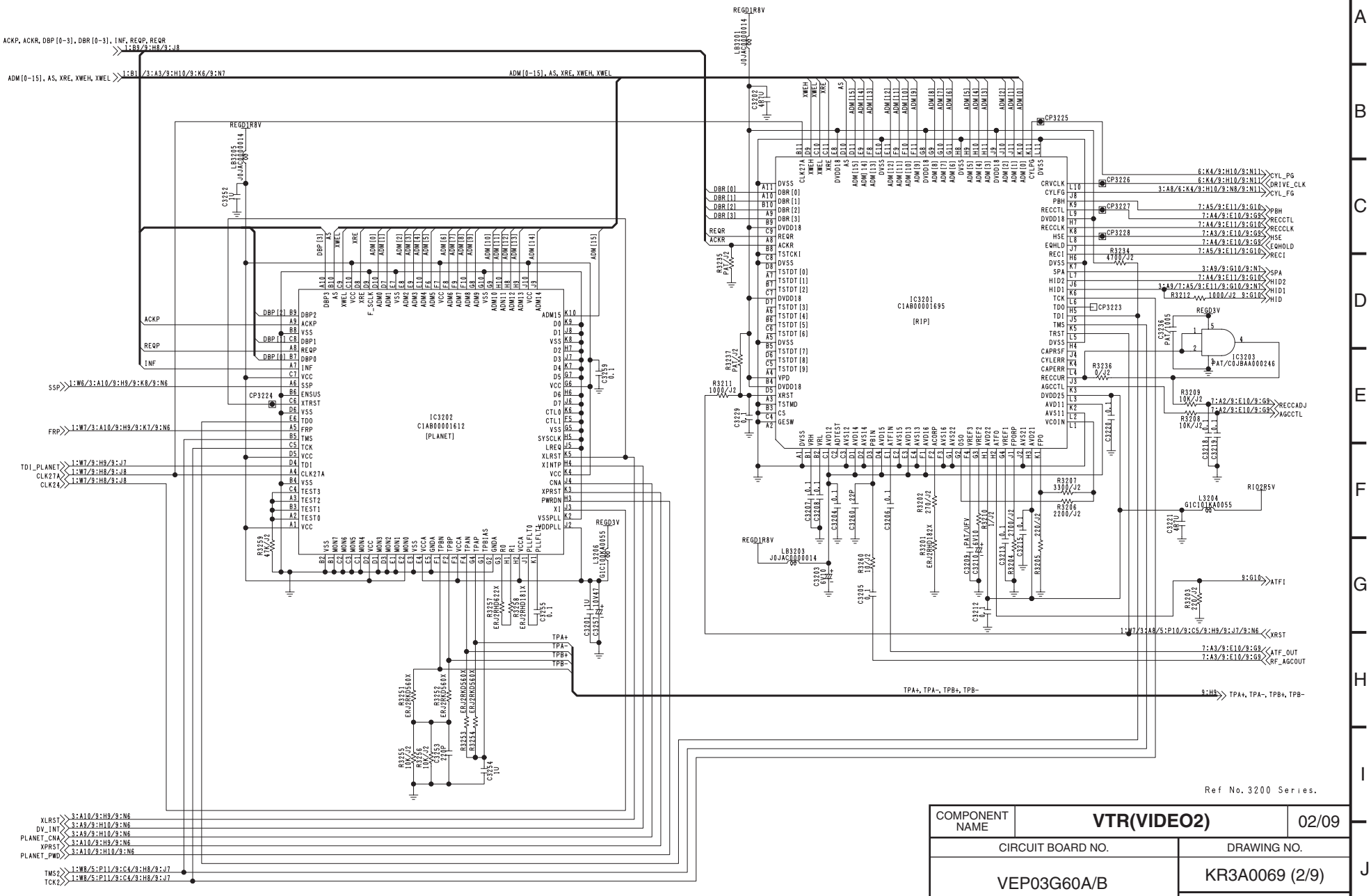


| COMPONENT NAME | VTR(VIDEO2) | 02/09 |
|---|---|---|
| CIRCUIT BOARD NO. | | DRAWING NO. |
| VEP03G60A/B | | KR3A0069 (2/9) |
| | | SCM003 |

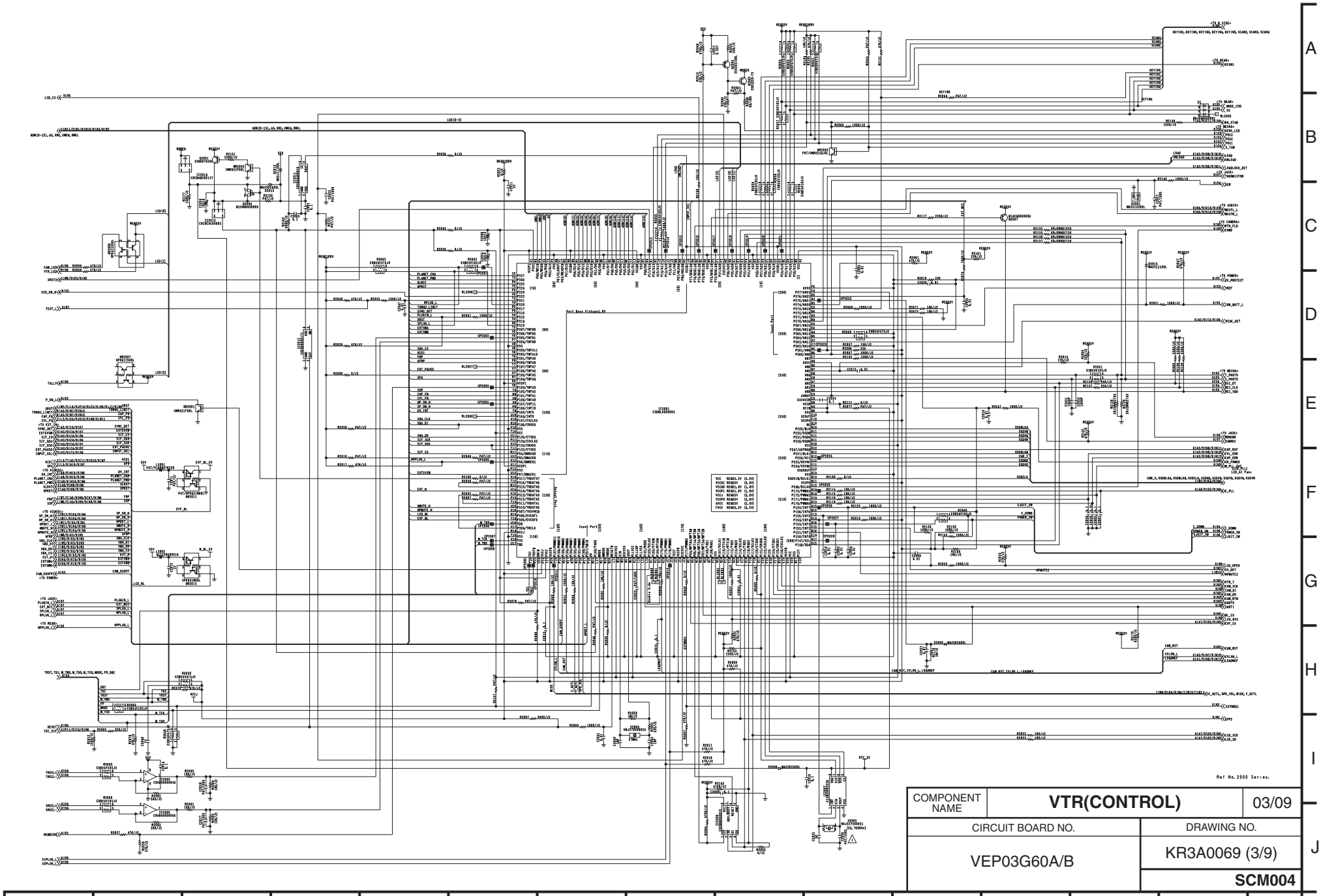

| COMPONENT NAME | VTR(CONTROL) | 03/09 |
|---|---|---|
| CIRCUIT BOARD NO. | | DRAWING NO. |
| VEP03G60A/B | | KR3A0069 (3/9) |
| | | SCM004 |

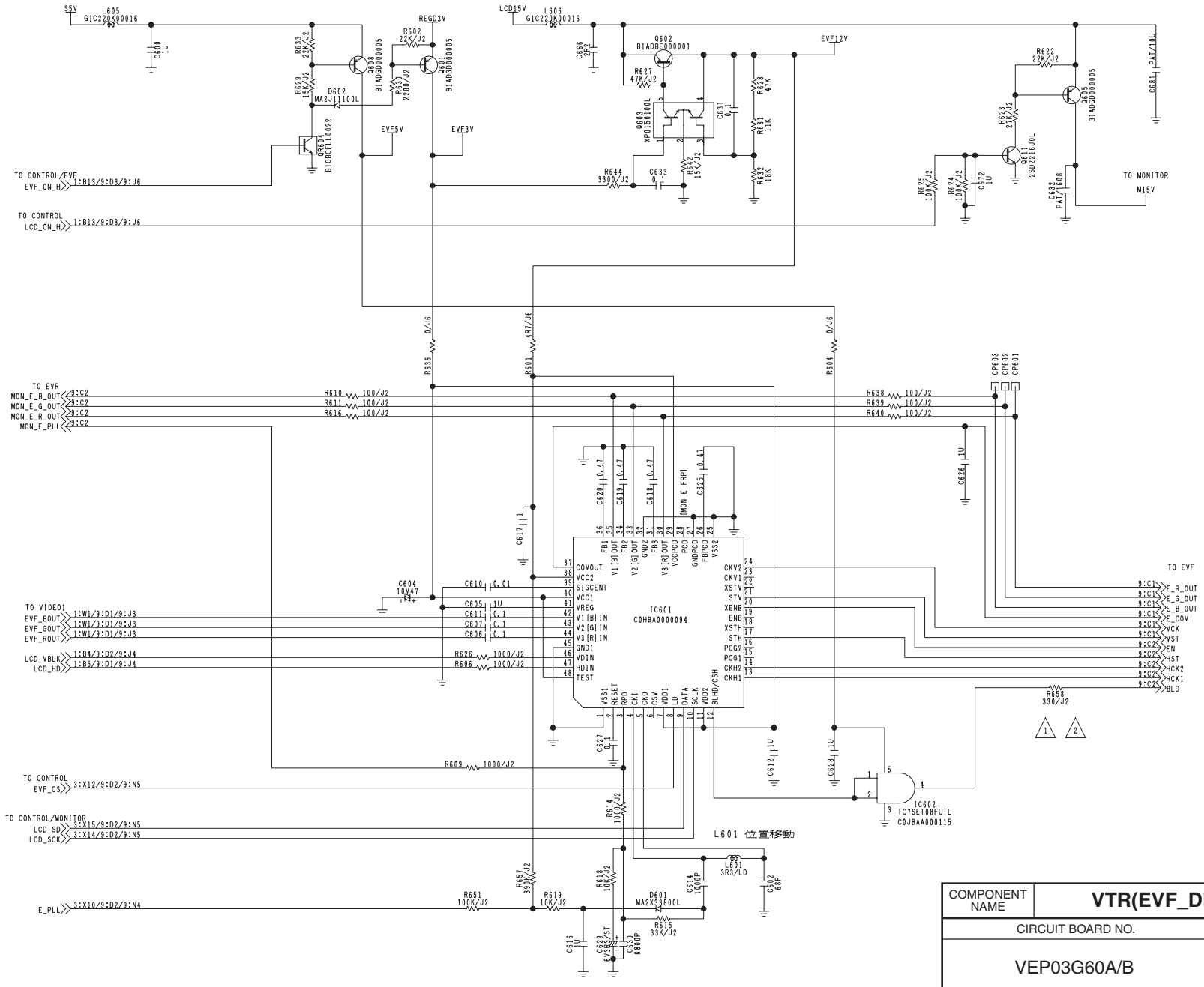


PAT=PATTERN ONLY
Ref No. 600 Series.

| COMPONENT NAME | VTR(EVF_DRIVER) | 04/09 |
|---|---|---|
| CIRCUIT BOARD NO. | | DRAWING NO. |
| VEP03G60A/B | | KR3A0069 (4/9) |
| | | SCM005 |

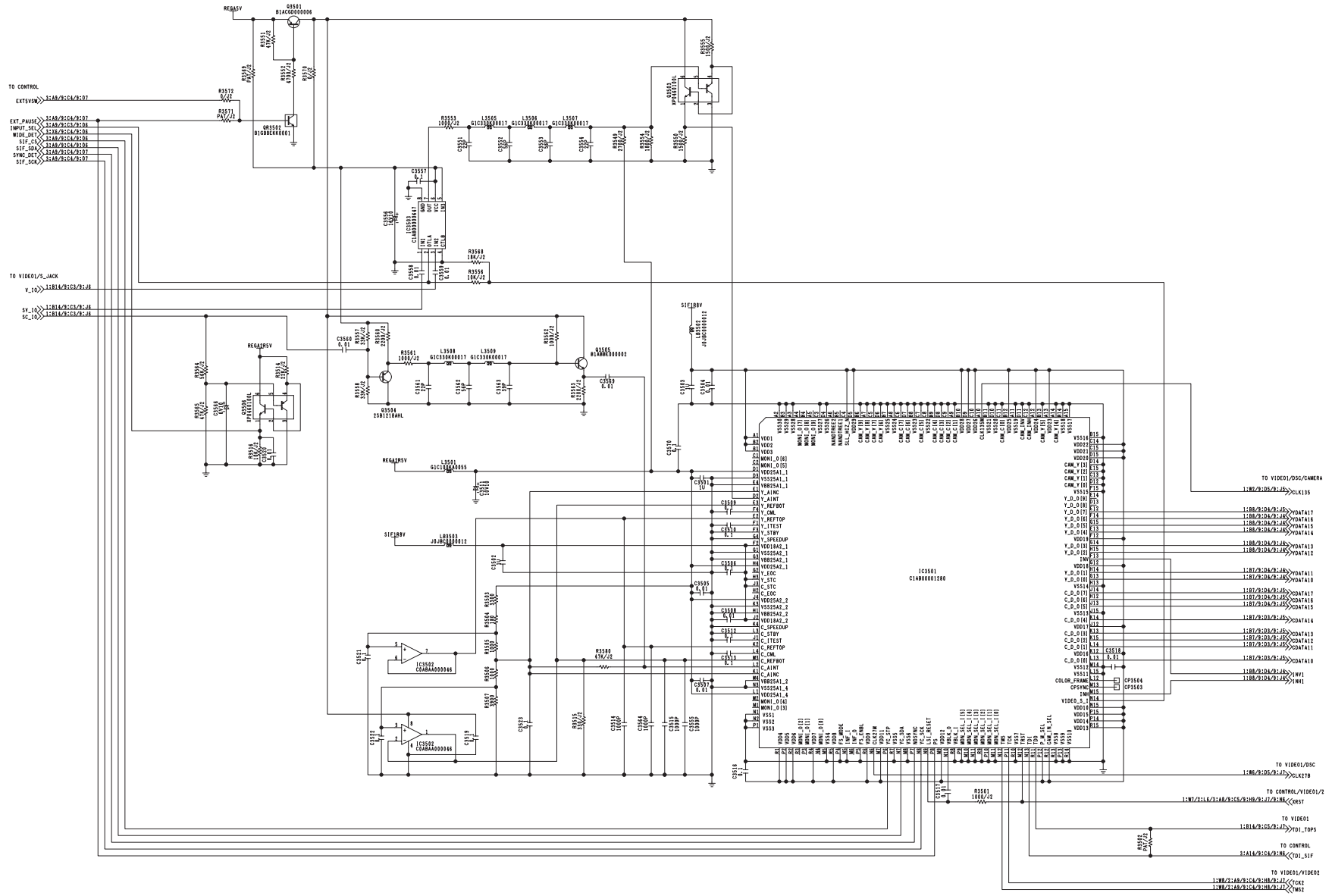


PAT=PATTERN ONLY
Ref No. 3500 Series.

| Ref No. | -T,-P,-AN | -E,-MC |
|---|---|---|
| C3520 | ECJ0WB1C103K | PAT |
| C3566 | ECJ0WB1C103K | PAT |
| Q3506 | XP04601001L | PAT |
| R3514 | ERJ2GEJ223X | PAT |
| R3564 | ERJ2GEJ563X | PAT |
| R3565 | ERJ2GEJ473X | PAT |

| COMPONENT NAME | VTR(EX_INPUT) | 05/09 |
|---|---|---|
| CIRCUIT BOARD NO. | | DRAWING NO. |
| VEP03G60A/B | | KR3A0069 (5/9) |
| | | SCM006 |

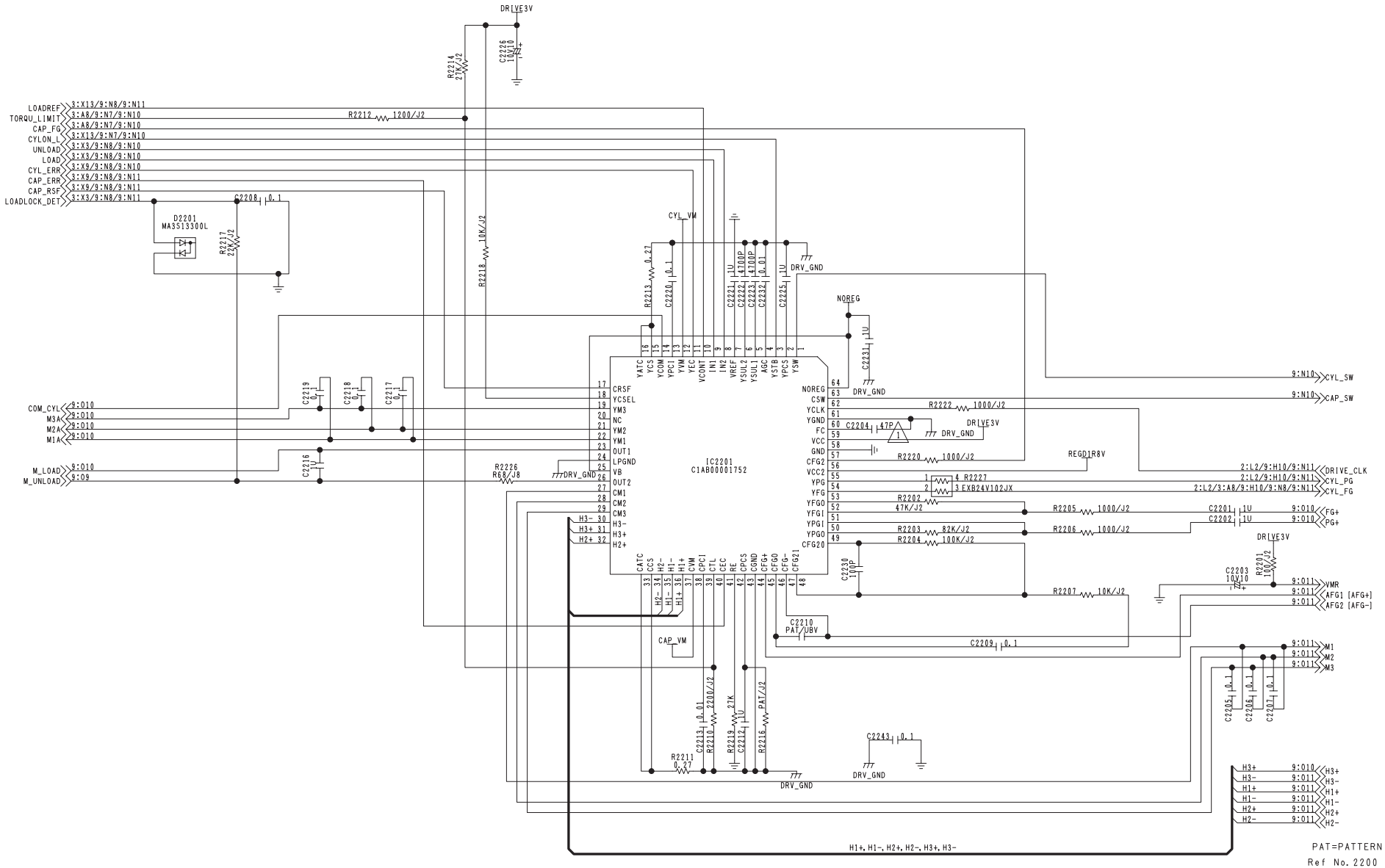


| COMPONENT NAME | VTR(DRIVE) | 06/09 |
|---|---|---|
| CIRCUIT BOARD NO. | | DRAWING NO. |
| VEP03G60A/B | | KR3A0069 (6/9) |
| | | SCM007 |

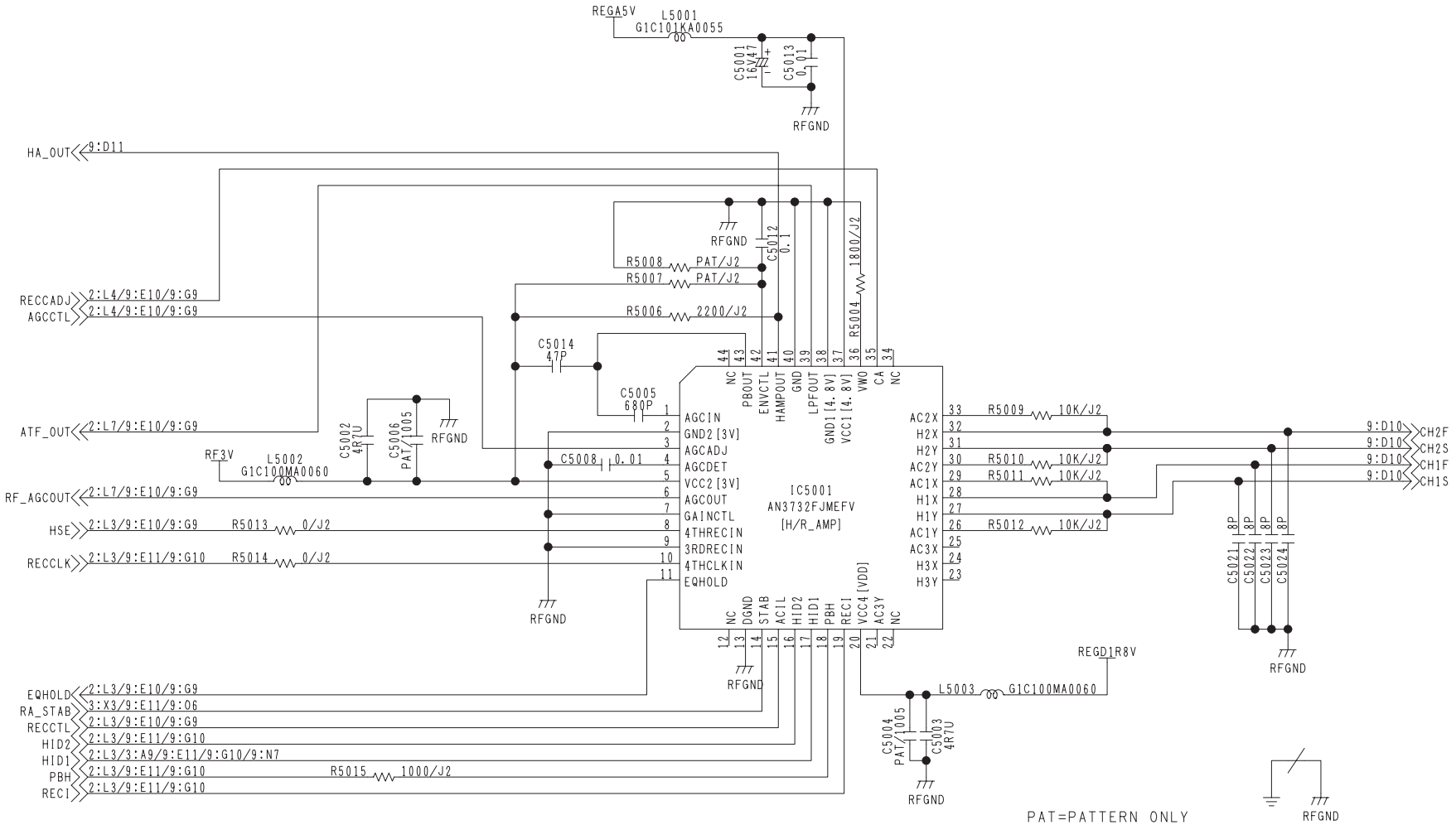


| COMPONENT NAME | VTR(HR_AMP) | 07/09 |
|---|---|---|
| CIRCUIT BOARD NO. | | DRAWING NO. |
| VEP03G60A/B | | KR3A0069 (7/9) |
| | | SCM008 |

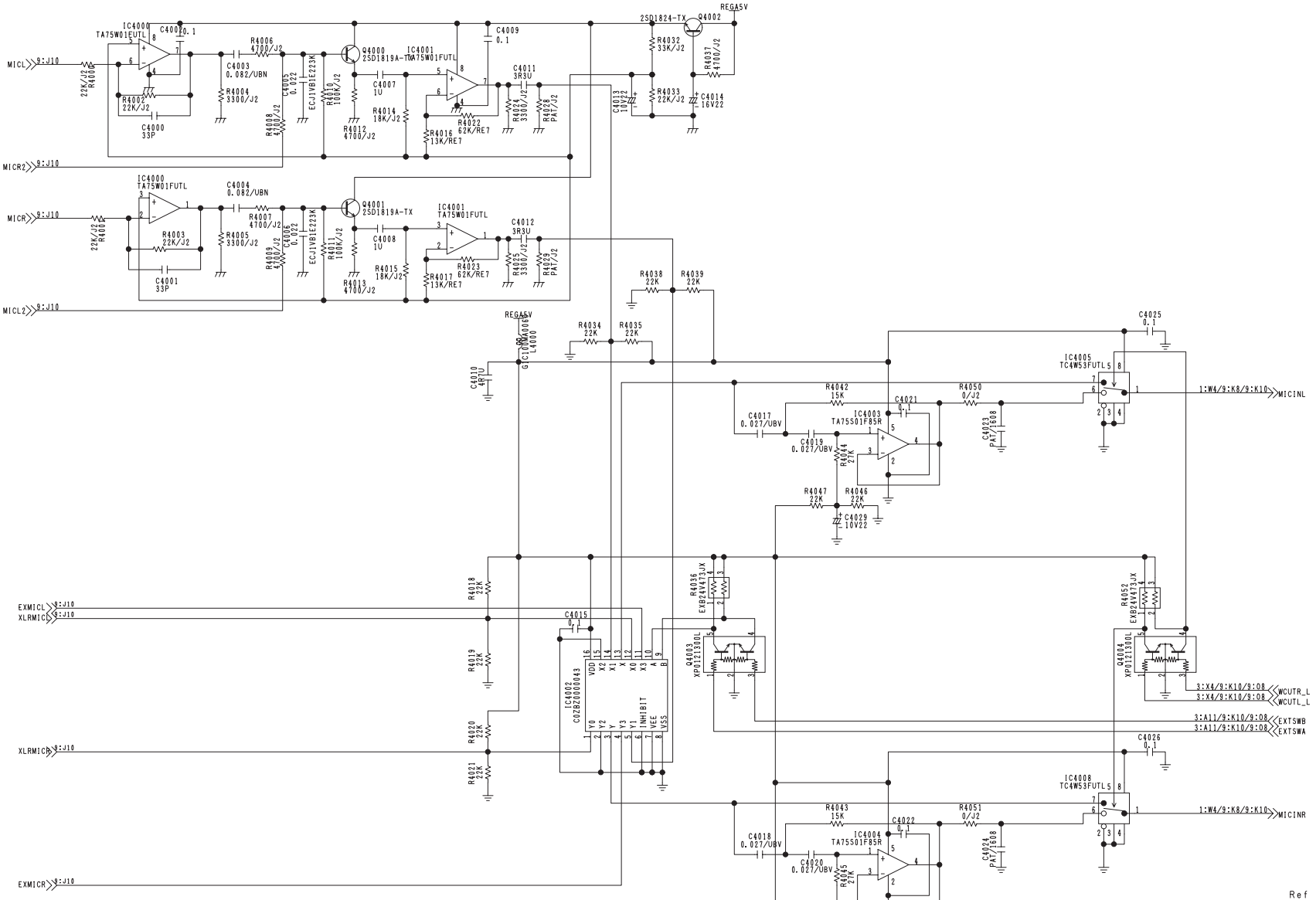


| COMPONENT NAME | VTR(AUDIO) | 08/09 |
|---|---|---|
| CIRCUIT BOARD NO. | | DRAWING NO. |
| VEP03G60A/B | | KR3A0069 (8/9) |
| | | SCM009 |

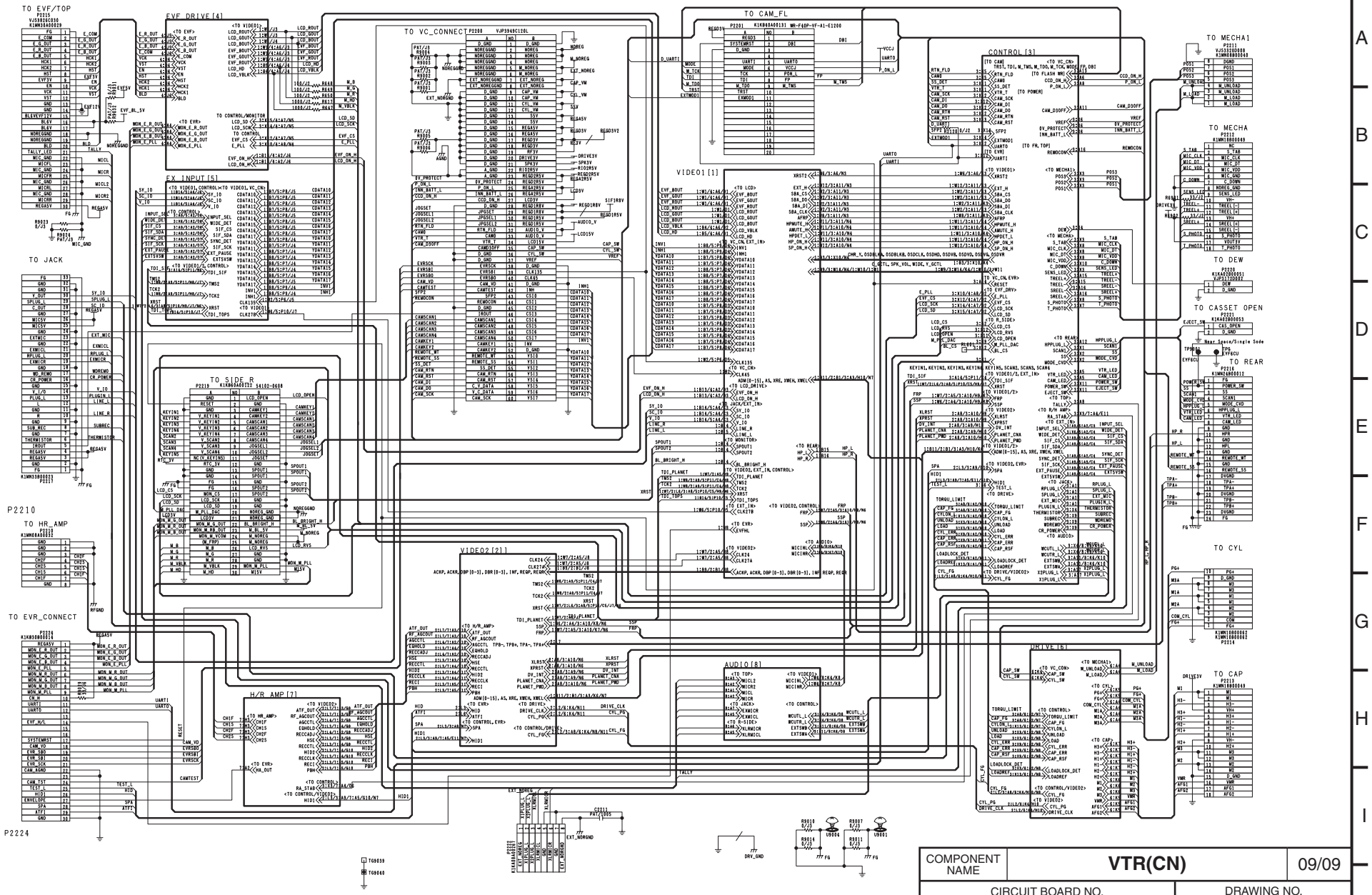


| COMPONENT NAME | VTR(CN) | 09/09 |
|---|---|---|
| CIRCUIT BOARD NO. | | DRAWING NO. |
| VEP03G60A/B | | KR3A0069 (9/9) |
| | | SCM010 |

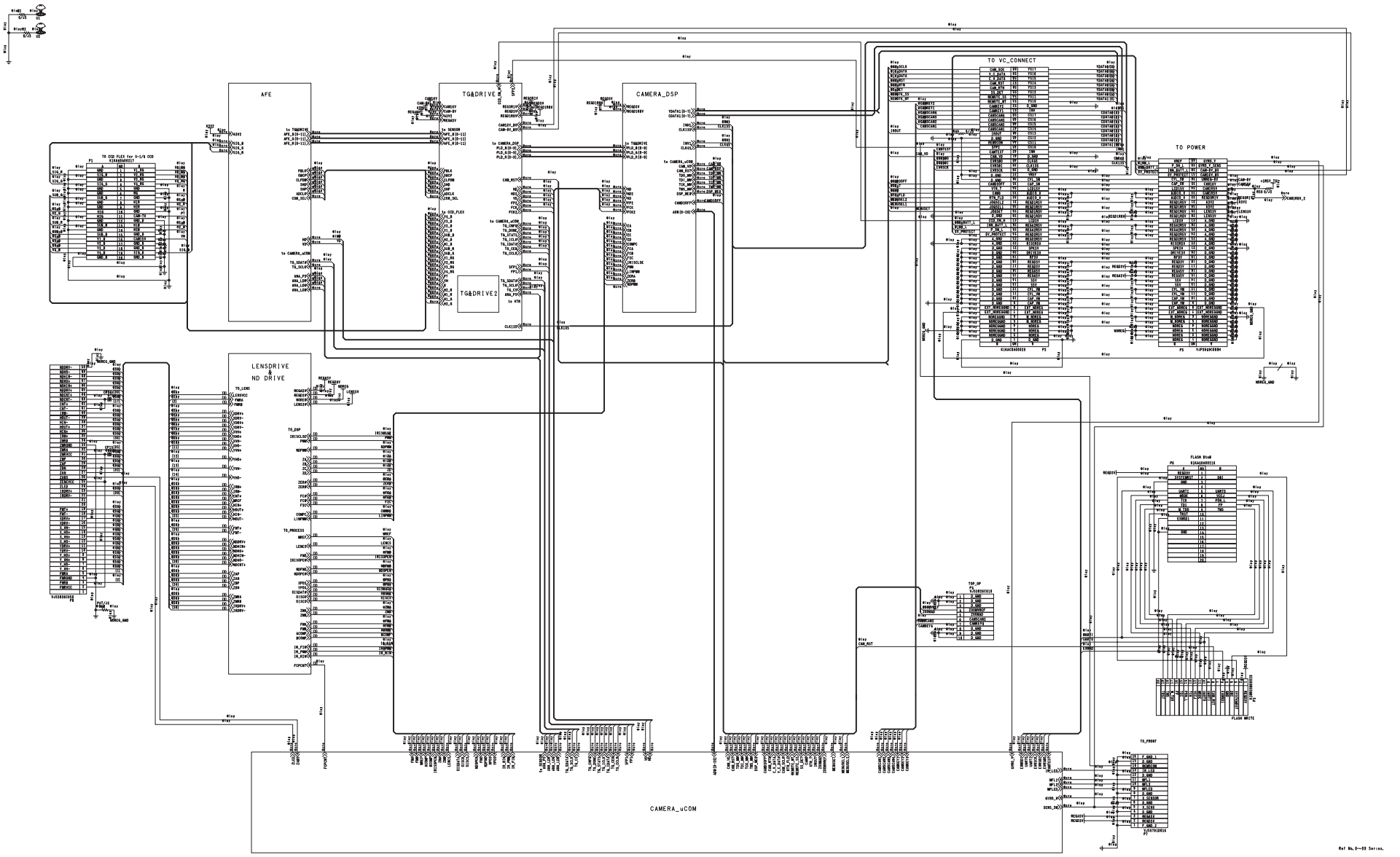


| COMPONENT NAME | CAMERA(SUB_CN) | 01/07 |
|---|---|---|
| CIRCUIT BOARD NO. | | DRAWING NO. |
| VEP23598A/B | | KR3A0045 (1/7) |
| | | SCM011 |

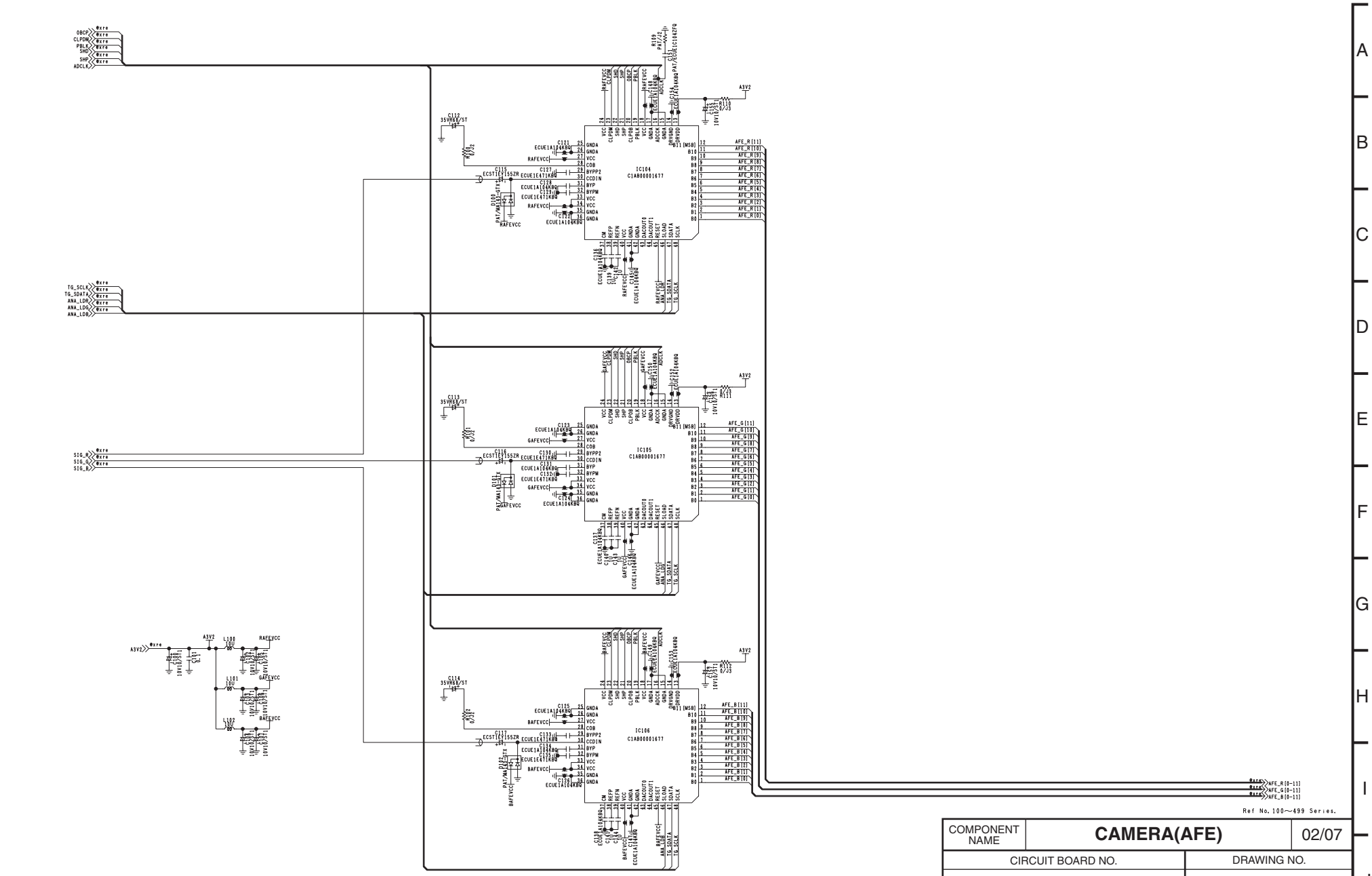


| COMPONENT NAME | CAMERA(AFE) | 02/07 |
|---|---|---|
| CIRCUIT BOARD NO. | | DRAWING NO. |
| VEP23598A/B | | KR3A0045 (2/7) |
| | | SCM012 |

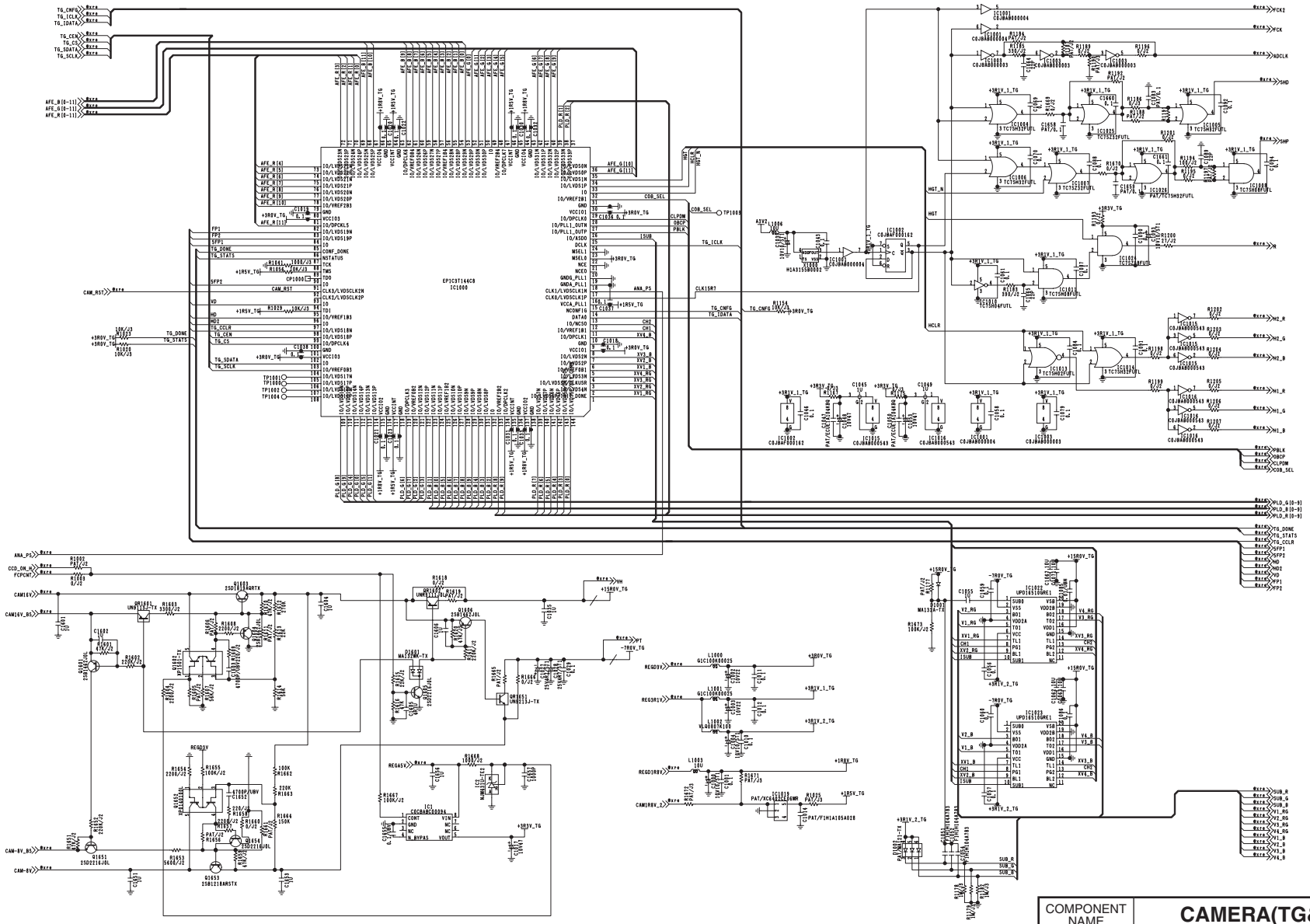

Ref No. 1000～1499 Series.

| COMPONENT NAME | CAMERA(TG&DRIVE) | 03/07 |
|---|---|---|
| CIRCUIT BOARD NO. | | DRAWING NO. |
| VEP23598A/B | | KR3A0045 (3/7) |
| | | SCM013 |

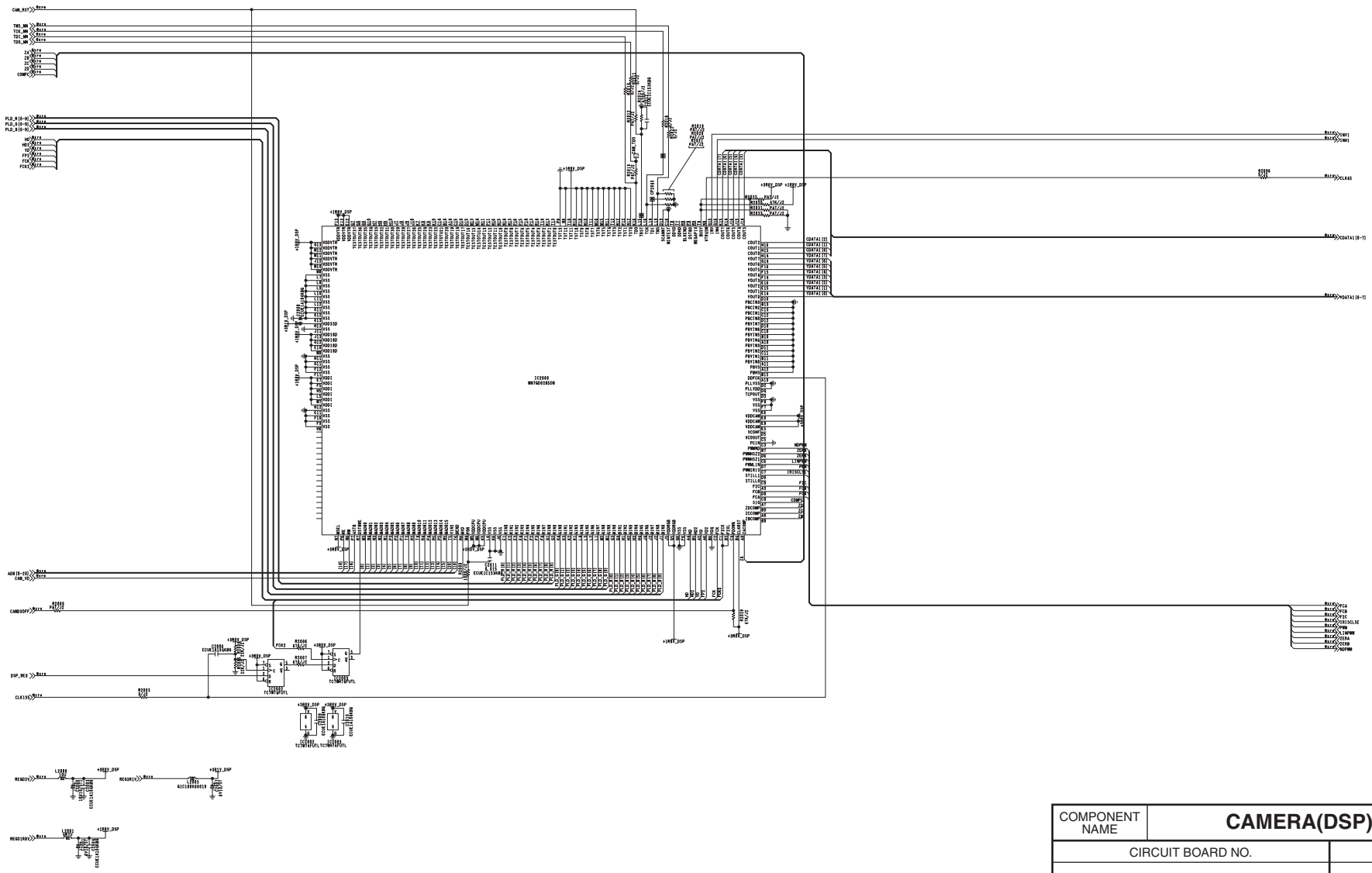

Ref No. 2000~2999 Series.

| COMPONENT NAME | CAMERA(DSP) | 04/07 |
|---|---|---|
| CIRCUIT BOARD NO. | | DRAWING NO. |
| VEP23598A/B | | KR3A0045 (4/7) |
| | | SCM014 |

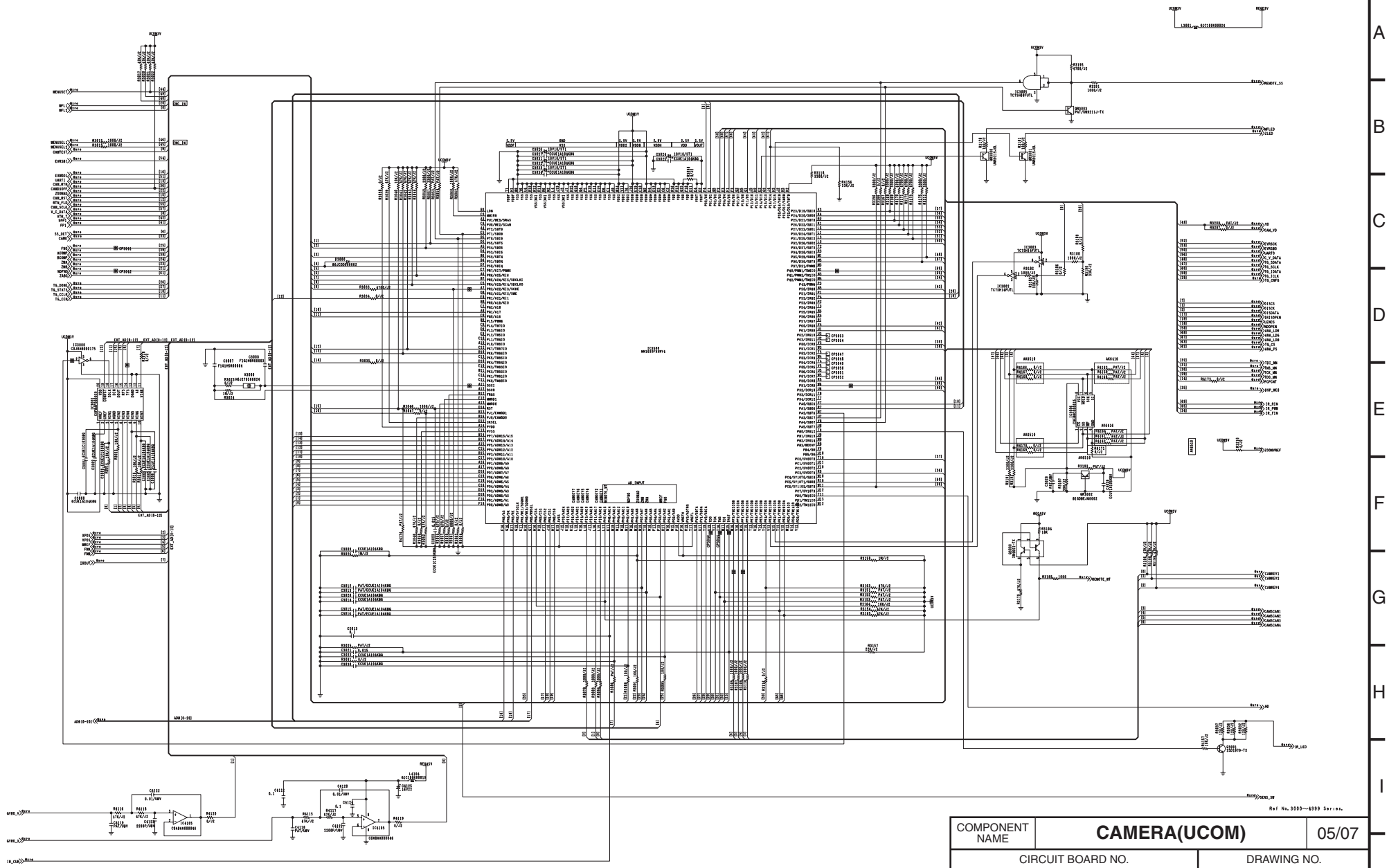

| COMPONENT NAME | CAMERA(UCOM) | 05/07 |
|---|---|---|
| CIRCUIT BOARD NO. | | DRAWING NO. |
| VEP23598A/B | | KR3A0045 (5/7) |
| | | SCM015 |

Ref No.3000~4999 Series.

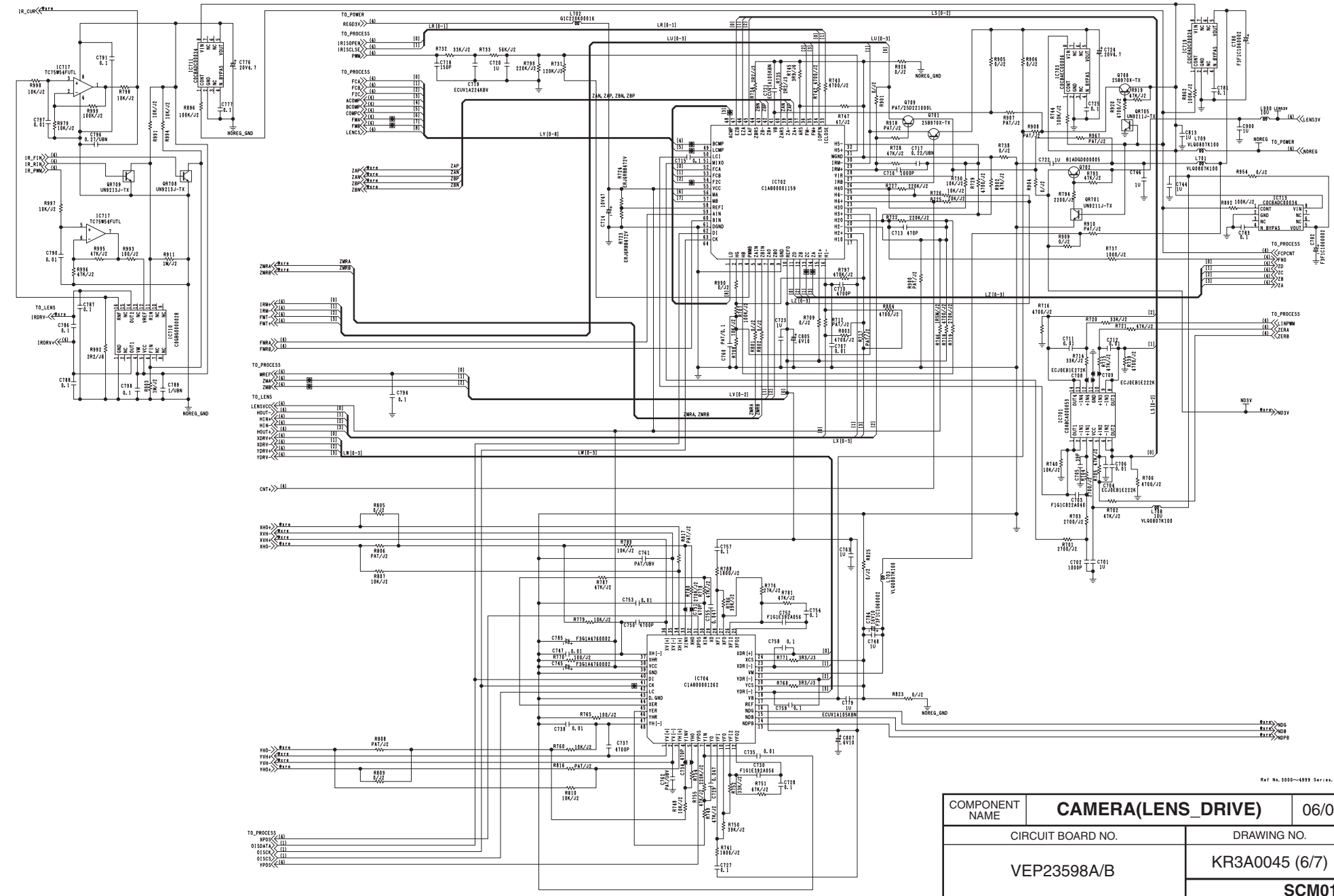


| COMPONENT NAME | CAMERA(LENS_DRIVE) | 06/07 |
|---|---|---|
| CIRCUIT BOARD NO. | | DRAWING NO. |
| VEP23598A/B | | KR3A0045 (6/7) |
| | | SCM016 |

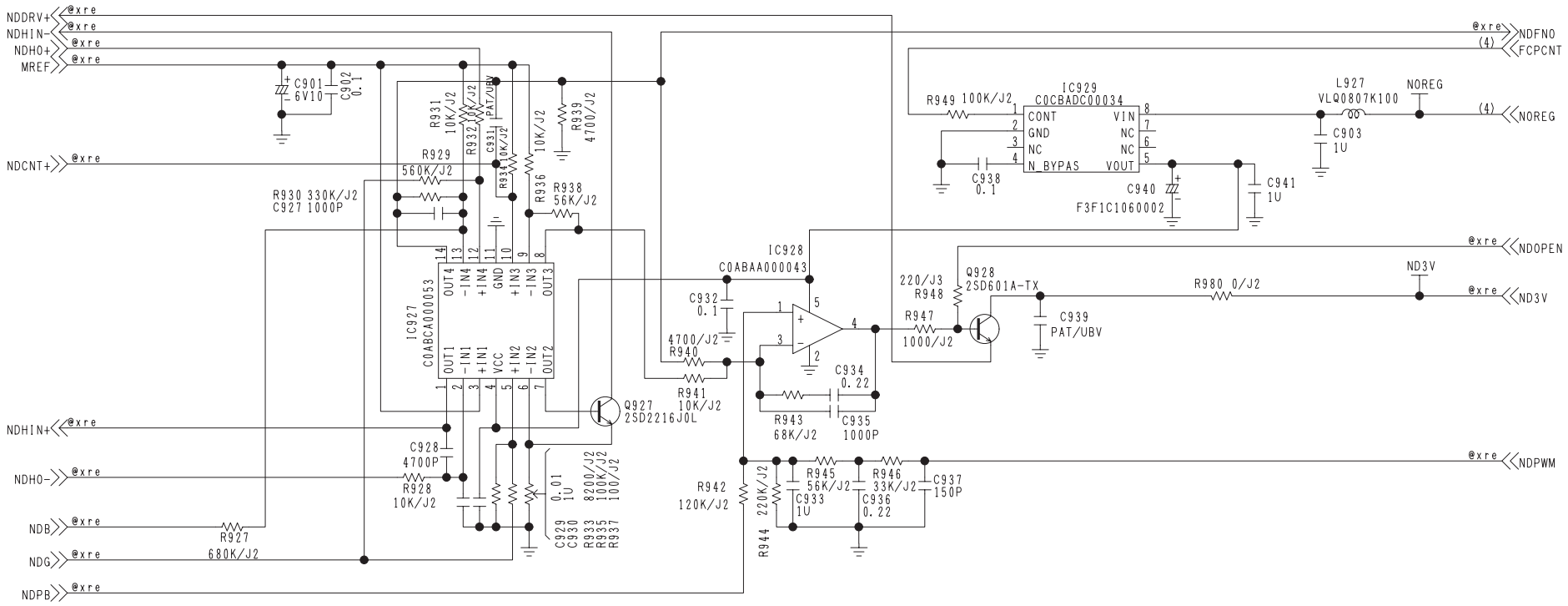


Ref No. 900～999 Series.

| COMPONENT NAME | CAMERA(ND_DRIVE) | 07/07 |
|---|---|---|
| CIRCUIT BOARD NO. | | DRAWING NO. |
| VEP23598A/B | | KR3A0045 (7/7) |
| | | SCM017 |

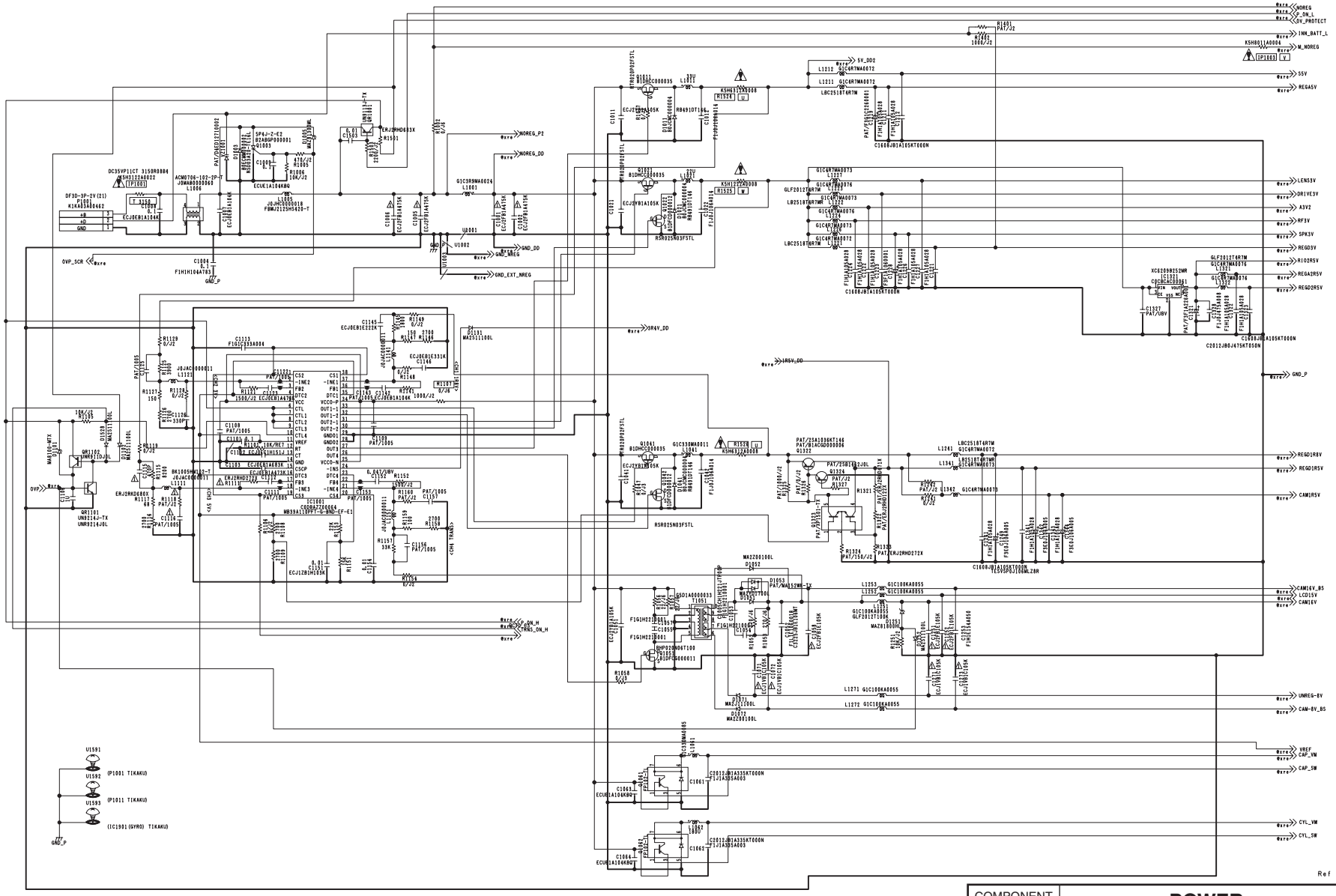

Ref No. 1000 Series.

| COMPONENT NAME | POWER | 01/02 |
|---|---|---|
| CIRCUIT BOARD NO. | | DRAWING NO. |
| VEP01952A | | KR1A0057 (1/2) |
| | | SCM018 |

IMPORTANT SAFETY NOTICE:
Components identified with the mark ⚠ have the special characteristics for safety.
When replacing any of these components, use only the same type.

⚠警 告 ⚠印の部品は安全上重要な部品です。
交換するときは、安全および性能維持のため必ず指定の部品をご使用ください。

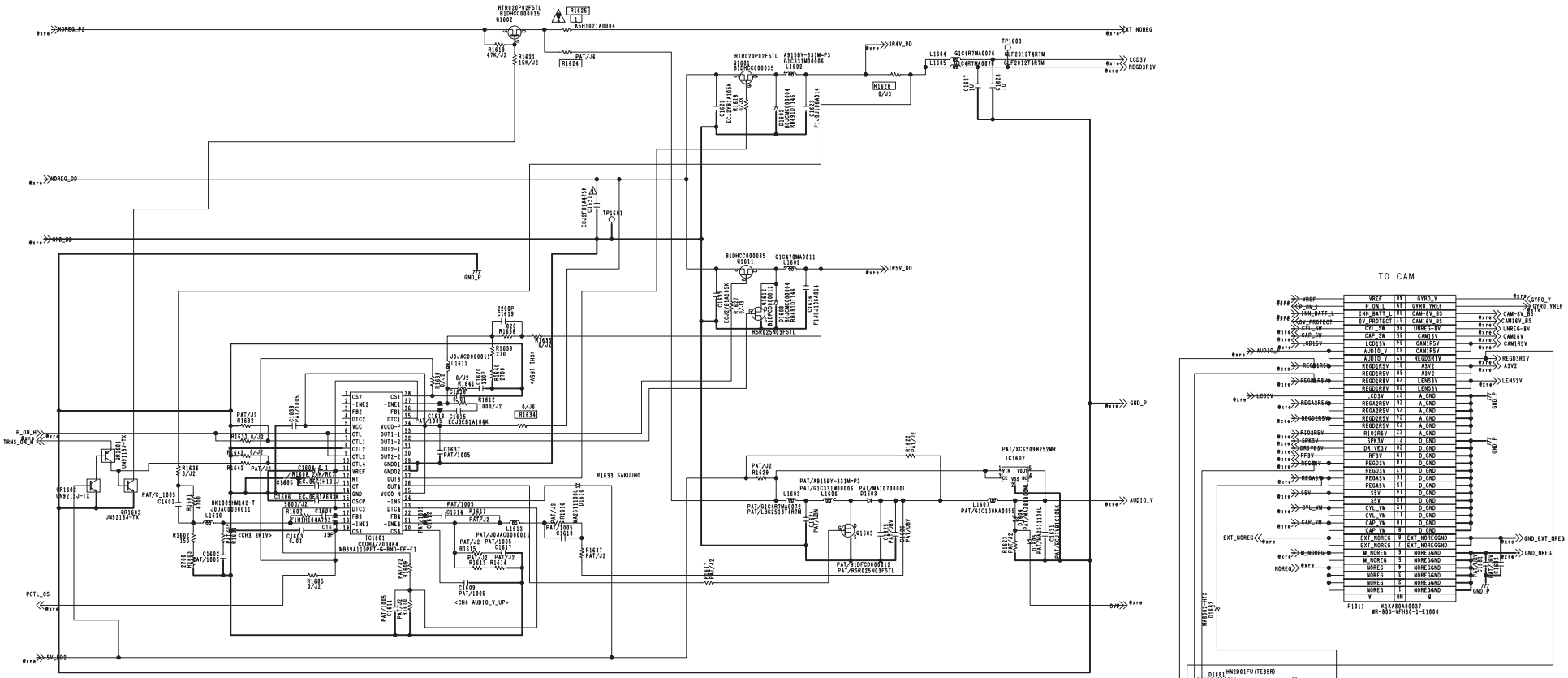


IMPORTANT SAFETY NOTICE:
Components identified with the mark ⚠ have the special characteristics for safety.
When replacing any of these components, use only the same type.

⚠ 警 告 ⚠印の部品は安全上重要な部品です。
交換するときは、安全および性能維持のため必ず指定の部品をご使用ください。

| COMPONENT NAME | POWER | 02/02 |
|---|---|---|
| CIRCUIT BOARD NO. | | DRAWING NO. |
| VEP01952A | | KR1A0057 (2/2) |
| | | SCM019 |

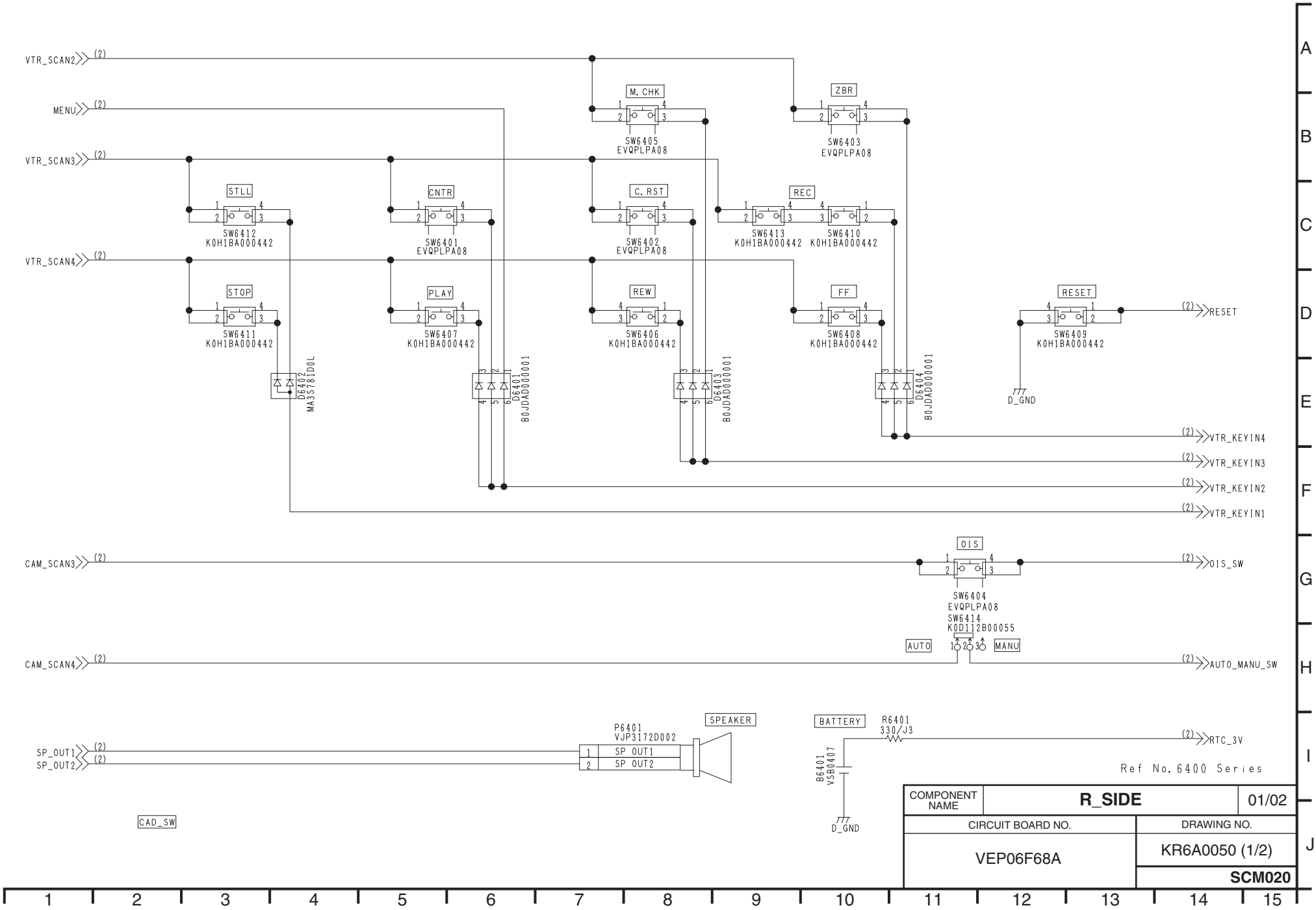


Ref No. 6400 Series

| COMPONENT NAME | R_SIDE | 01/02 |
|---|---|---|
| CIRCUIT BOARD NO. | | DRAWING NO. |
| VEP06F68A | | KR6A0050 (1/2) |
| | | SCM020 |

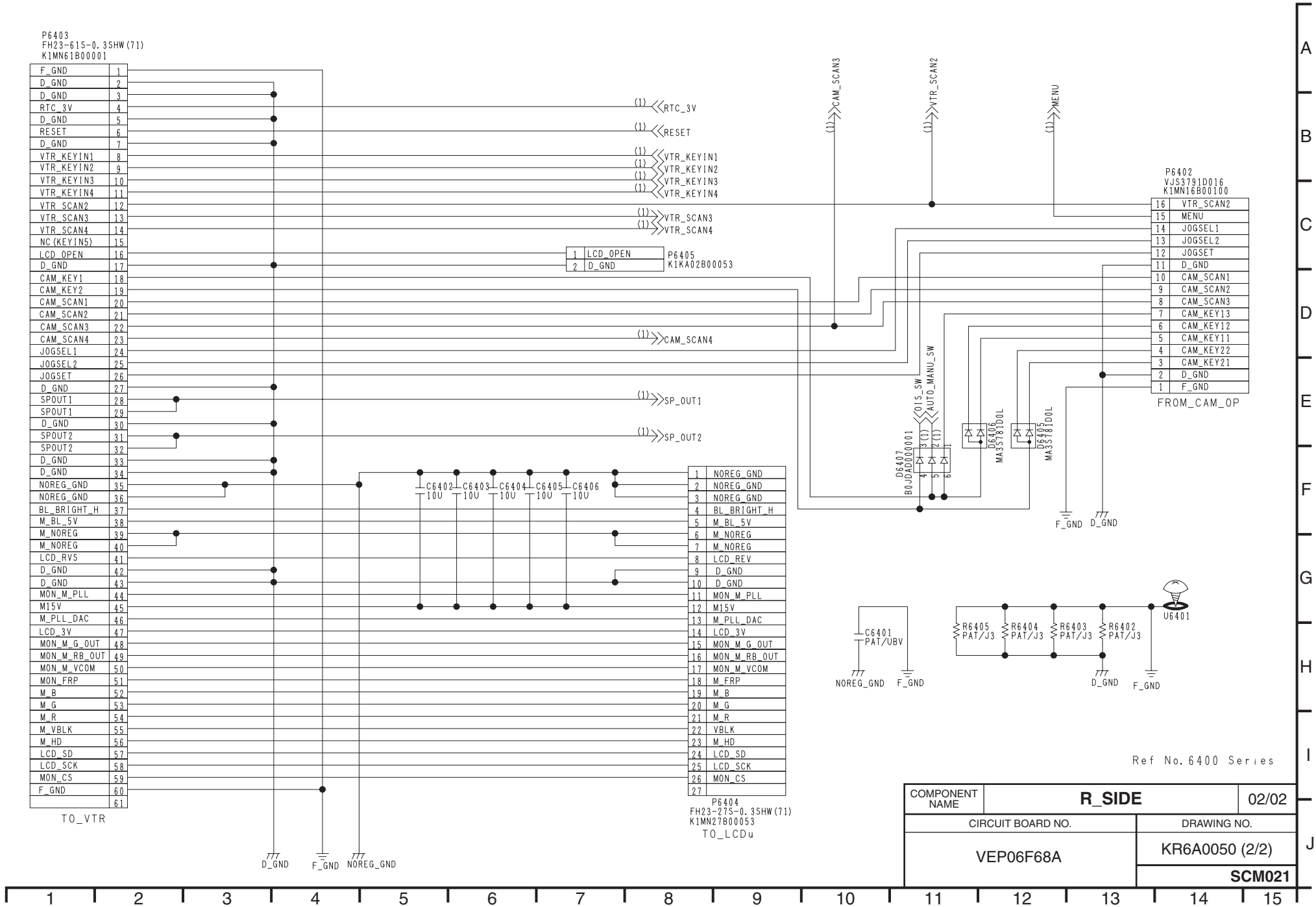


| COMPONENT NAME | R_SIDE | 02/02 |
|---|---|---|
| CIRCUIT BOARD NO. | | DRAWING NO. |
| VEP06F68A | | KR6A0050 (2/2) |
| | | SCM021 |

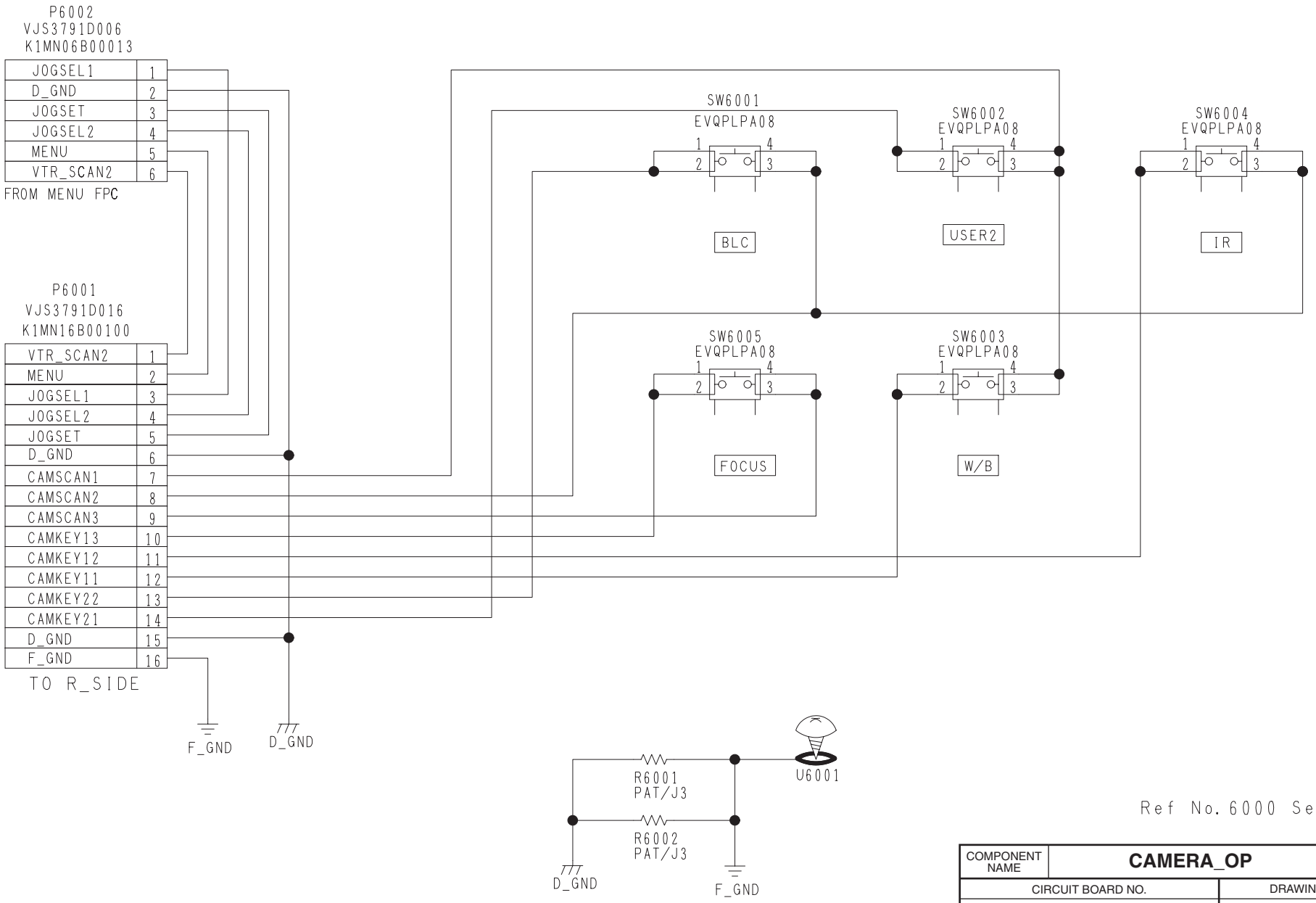


Ref No. 6000 Series

| COMPONENT NAME | CAMERA_OP | 01/01 |
|---|---|---|
| CIRCUIT BOARD NO. | | DRAWING NO. |
| VEP06F64A | | KR6A0046 (1/1) |
| | | SCM022 |

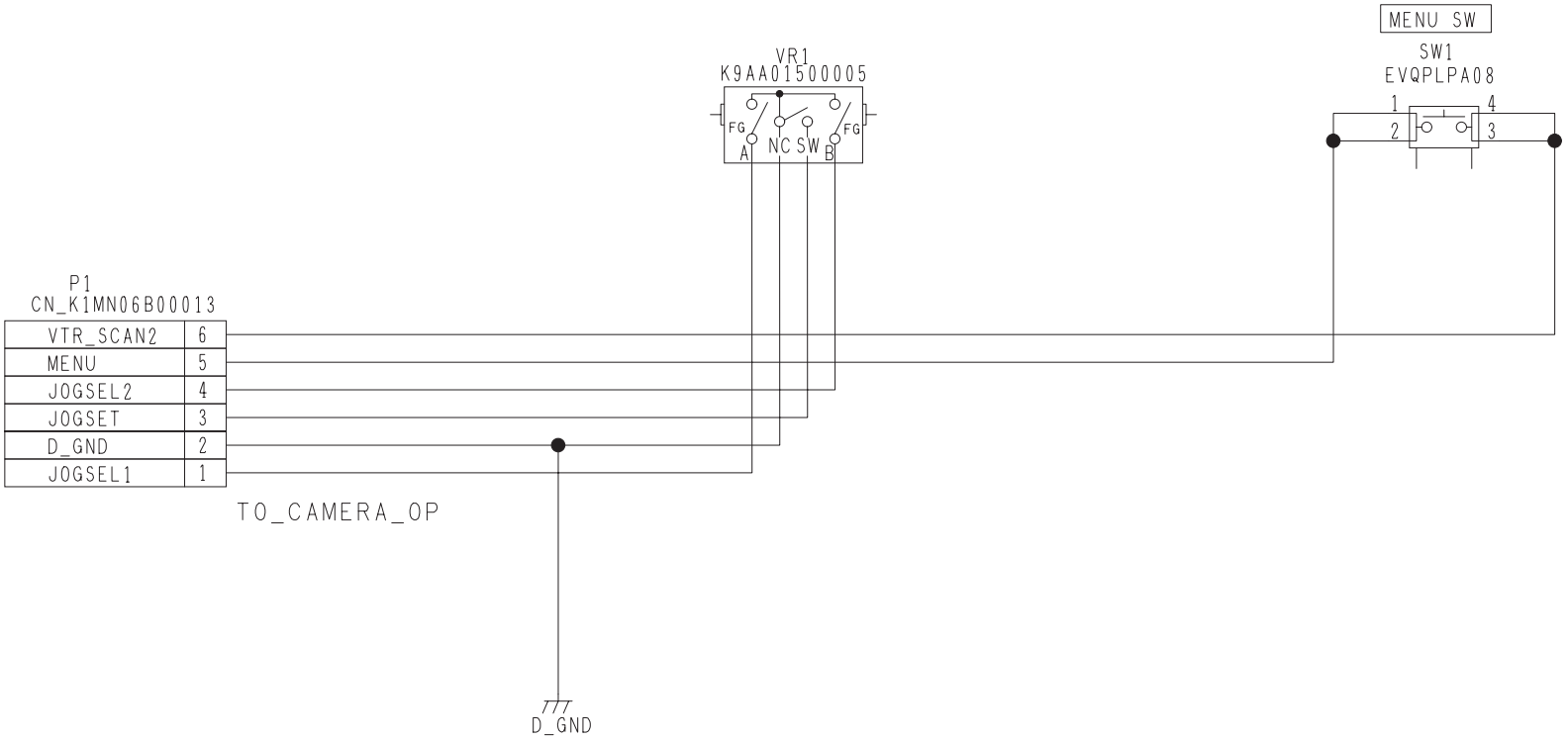


Ref No. 000 Series

| COMPONENT NAME | MENU FPC | 01/01 |
|---|---|---|
| CIRCUIT BOARD NO. | DRAWING NO. | |
| VEP001G2A | KR0A0148 (1/1) | |
| | SCM023 | |

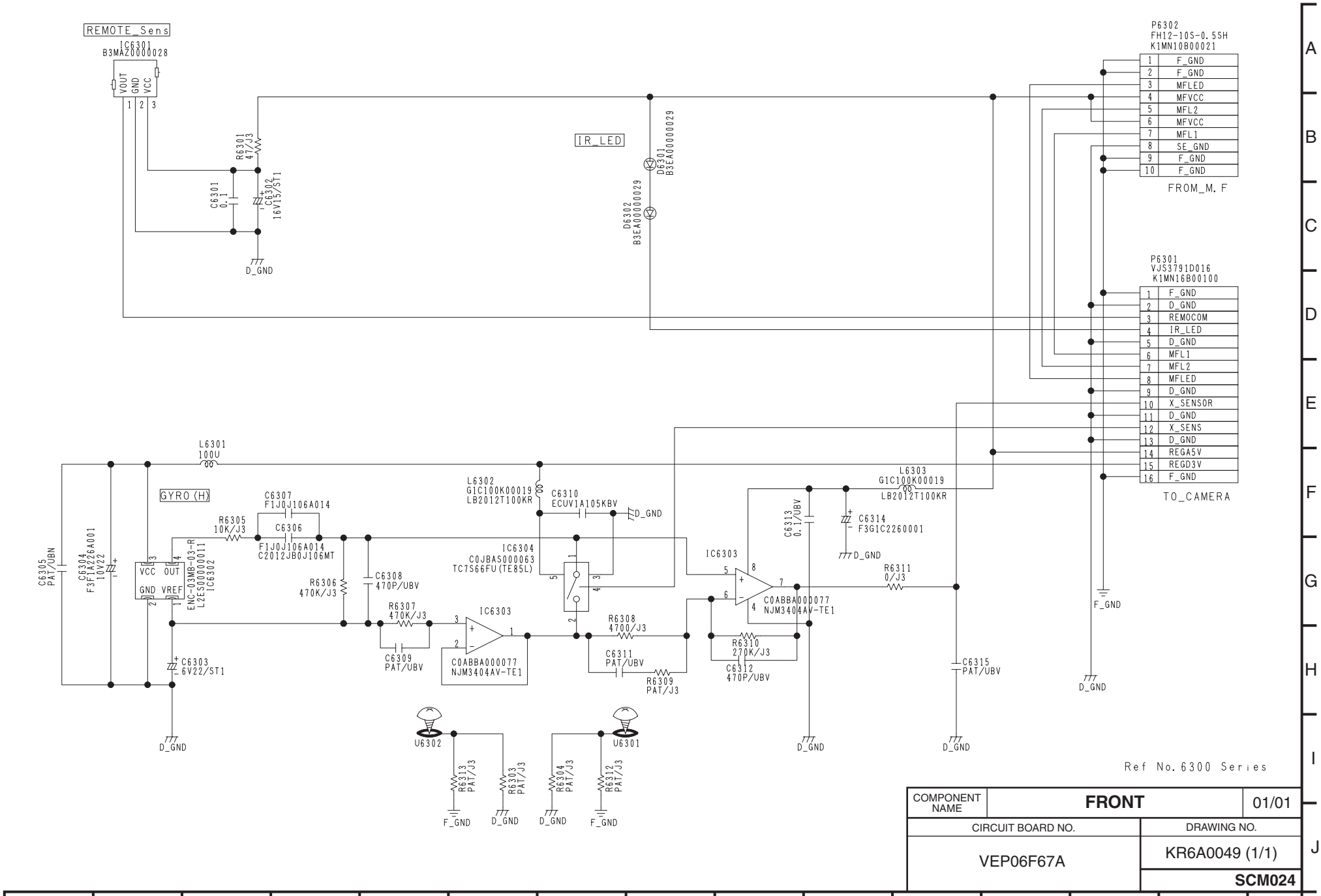


| COMPONENT NAME | FRONT | 01/01 |
|---|---|---|
| CIRCUIT BOARD NO. | | DRAWING NO. |
| VEP06F67A | | KR6A0049 (1/1) |
| | | SCM024 |

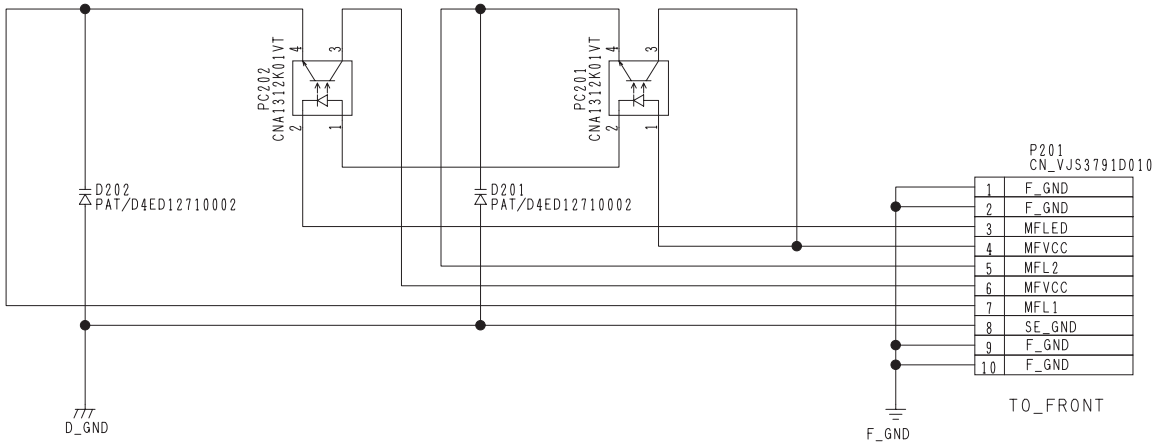


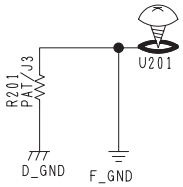


Ref No. 200 Series

| COMPONENT NAME | MF FPC | 01/01 |
|---|---|---|
| CIRCUIT BOARD NO. | | DRAWING NO. |
| VEP001E2A | | KR0A0072 (1/1) |
| | | SCM025 |

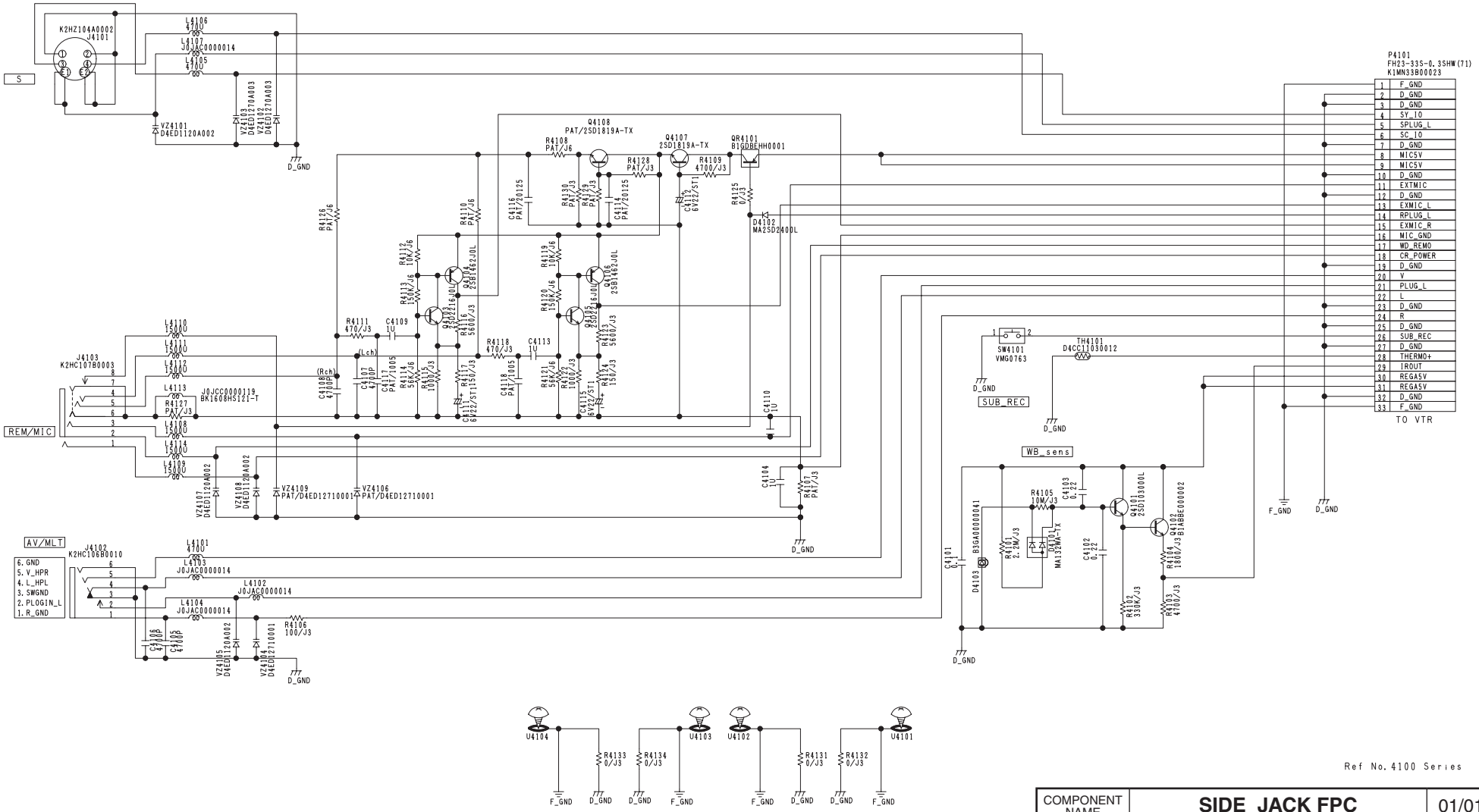


Ref No. 4100 Series

| COMPONENT NAME | SIDE_JACK FPC | 01/01 |
|---|---|---|
| CIRCUIT BOARD NO. | | DRAWING NO. |
| VEP04861A | | KR4A0028 (1/1) |
| | | SCM026 |

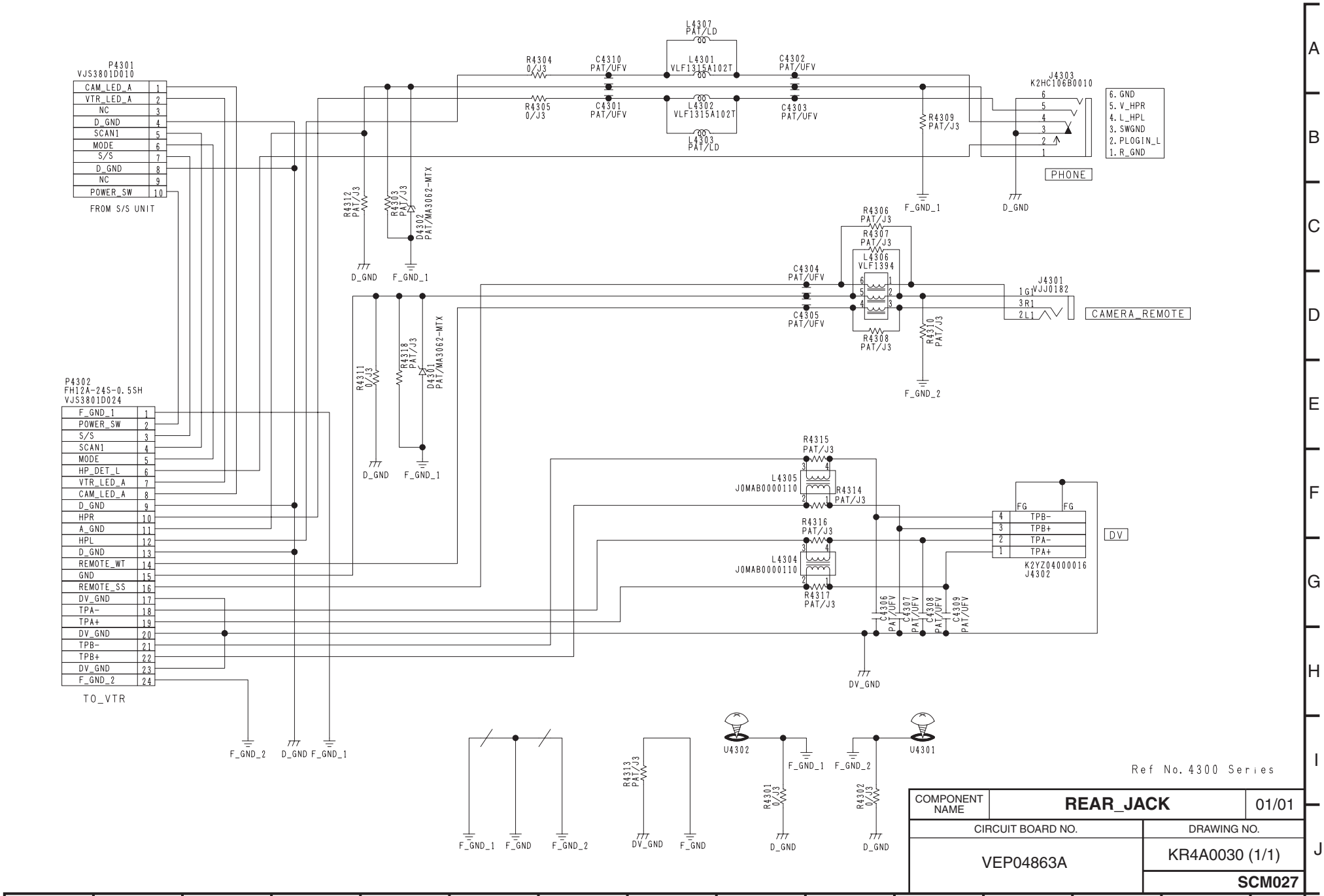


Ref No. 4300 Series

| COMPONENT NAME | REAR_JACK | 01/01 |
|---|---|---|
| CIRCUIT BOARD NO. | | DRAWING NO. |
| VEP04863A | | KR4A0030 (1/1) |
| | | SCM027 |

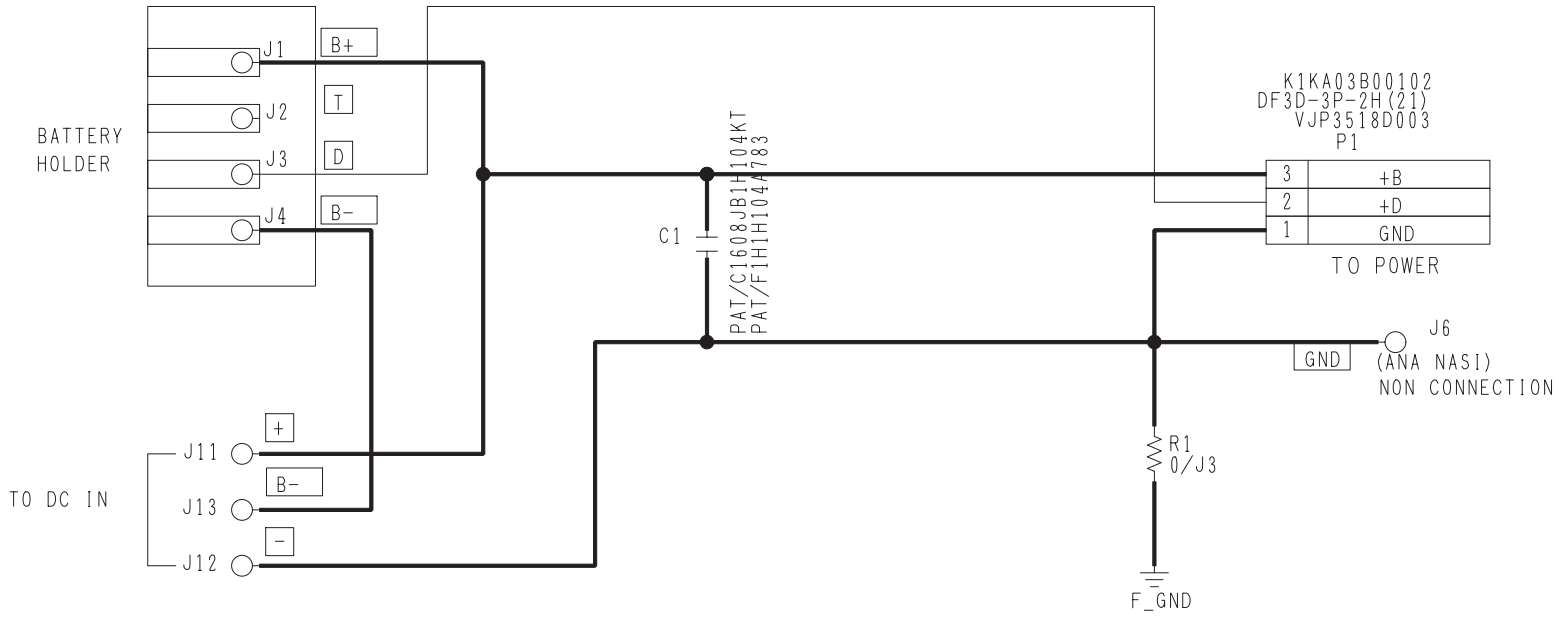


PAT=PATTERN ONLY
Ref No. Series.

| COMPONENT NAME | BATTERY | 01/01 |
|---|---|---|
| CIRCUIT BOARD NO. | | DRAWING NO. |
| VEP01953A | | KR1A0047 (1/1) |
| | | SCM028 |

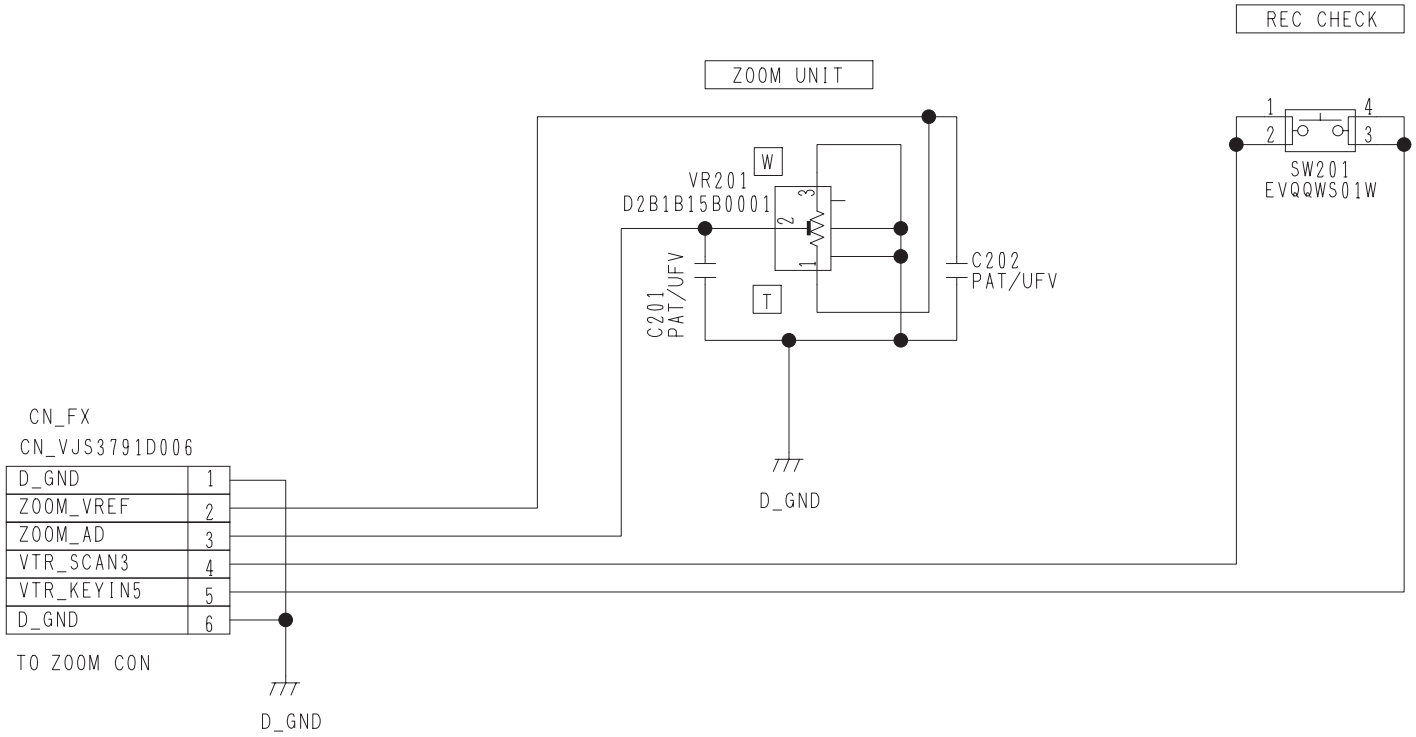


Ref No. 201-250 Series.

| COMPONENT NAME | ZOOM FPC | 01/01 |
|---|---|---|
| CIRCUIT BOARD NO. | DRAWING NO. | |
| VEP06F66A | KR6A0090 (1/1) | |
| | SCM029 | |

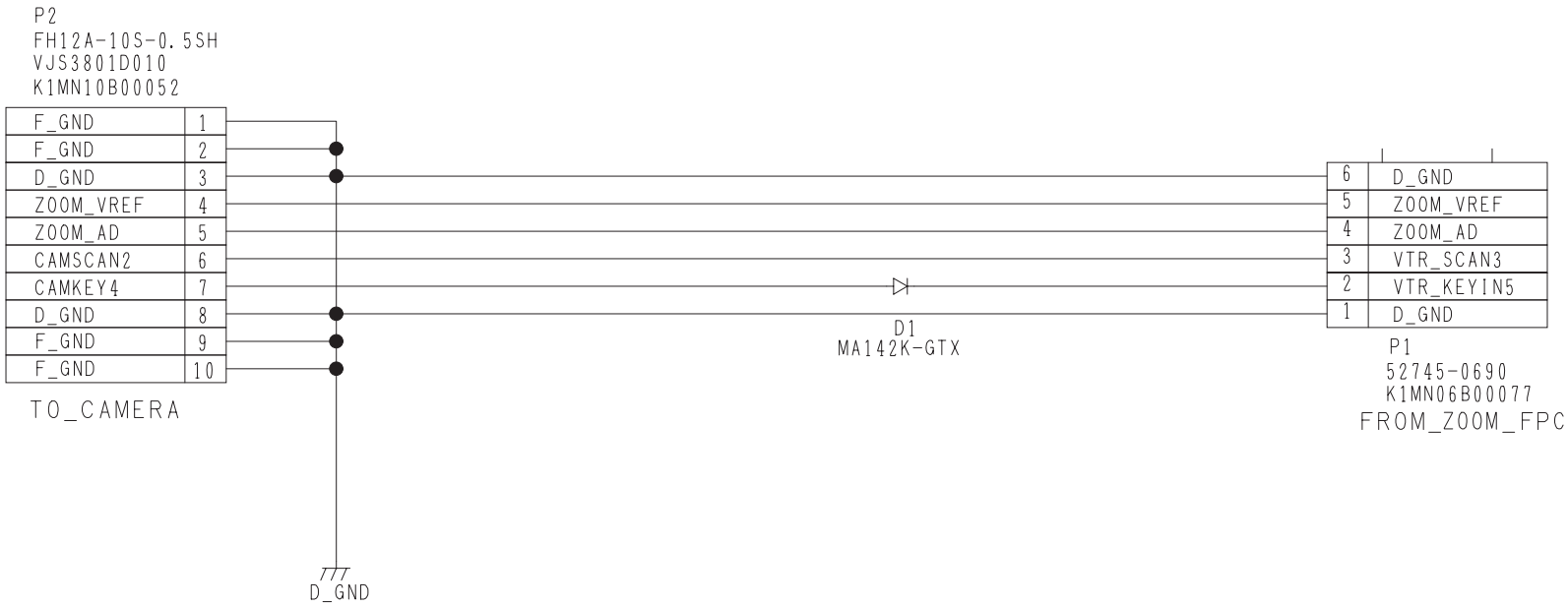


Ref No. 000 Series

| COMPONENT NAME | ZOOM_CON | 01/01 |
|---|---|---|
| CIRCUIT BOARD NO. | | DRAWING NO. |
| VEP001E3A | | KR0A0114 (1/1) |
| | | SCM030 |

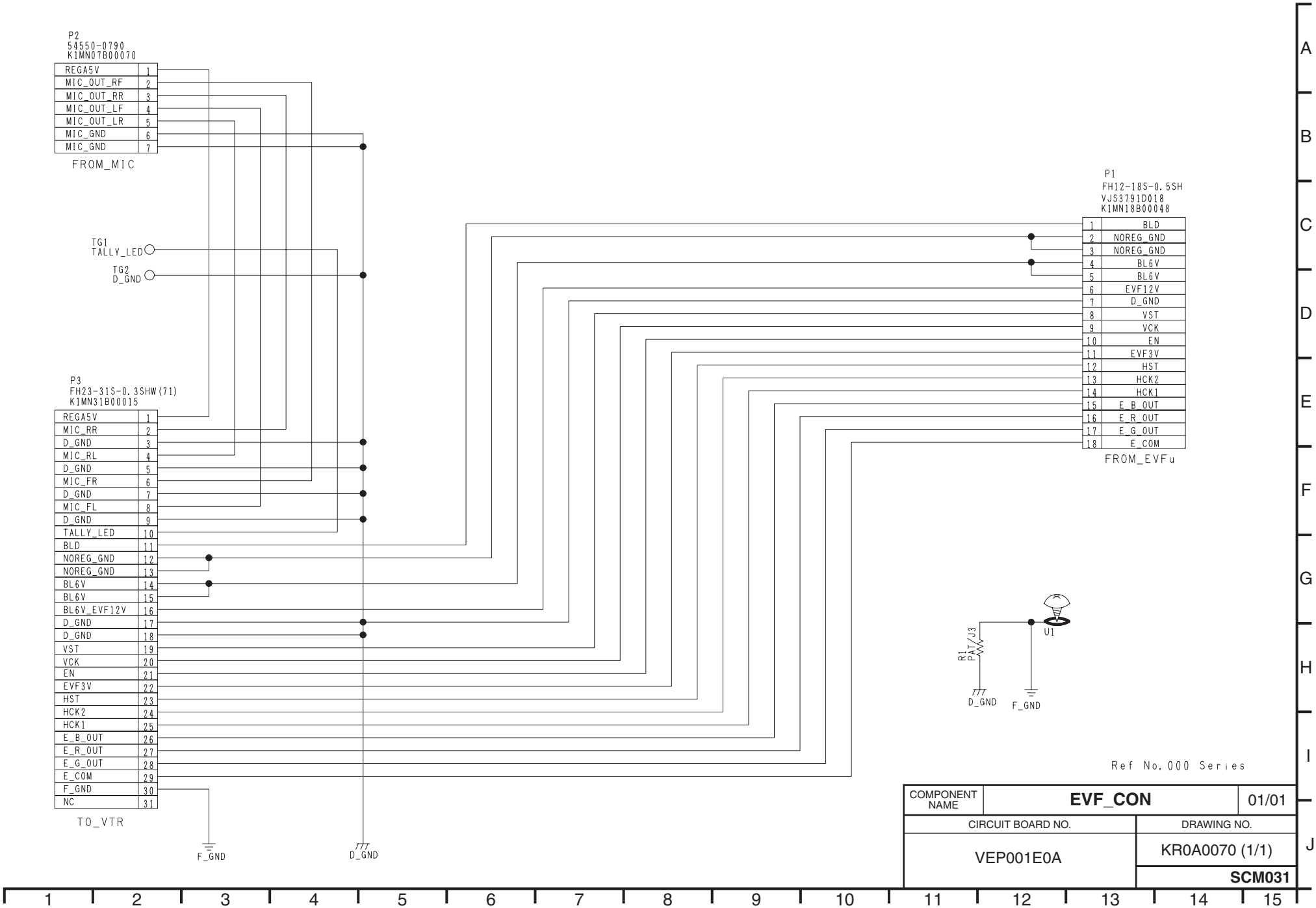
P2
54550-0790
K1MN07B00070
REGA5V 1
MIC_OUT_RF 2
MIC_OUT_RR 3
MIC_OUT_LF 4
MIC_OUT_LR 5
MIC_GND 6
MIC_GND 7
FROM_MIC
TG1
TALLY_LED
TG2
D_GND
P3
FH23-31S-0.3SHW(71)
K1MN31B00015
REGA5V 1
MIC_RR 2
D_GND 3
MIC_RL 4
D_GND 5
MIC_FR 6
D_GND 7
MIC_FL 8
D_GND 9
TALLY_LED 10
BLD 11
NOREG_GND 12
NOREG_GND 13
BL6V 14
BL6V 15
BL6V_EVF12V 16
D_GND 17
D_GND 18
VST 19
VCK 20
EN 21
EVF3V 22
HST 23
HCK2 24
HCK1 25
E_B_OUT 26
E_R_OUT 27
E_G_OUT 28
E_COM 29
F_GND 30
NC 31
TO_VTR
F_GND
D_GND
P1
FH12-18S-0.5SH
VJS3791D018
K1MN18B00048
1 BLD
2 NOREG_GND
3 NOREG_GND
4 BL6V
5 BL6V
6 EVF12V
7 D_GND
8 VST
9 VCK
10 EN
11 EVF3V
12 HST
13 HCK2
14 HCK1
15 E_B_OUT
16 E_R_OUT
17 E_G_OUT
18 E_COM
FROM_EVFu
R1
PAT/J3
U1
D_GND
F_GND
Ref No. 000 Series
COMPONENT NAME
EVF_CON
01/01
CIRCUIT BOARD NO.
VEP001E0A
DRAWING NO.
KR0A0070 (1/1)
SCM031
A
B
C
D
E
F
G
H
I
J
1
2
3
4
5
6
7
8
9
10
11
12
13
14
15

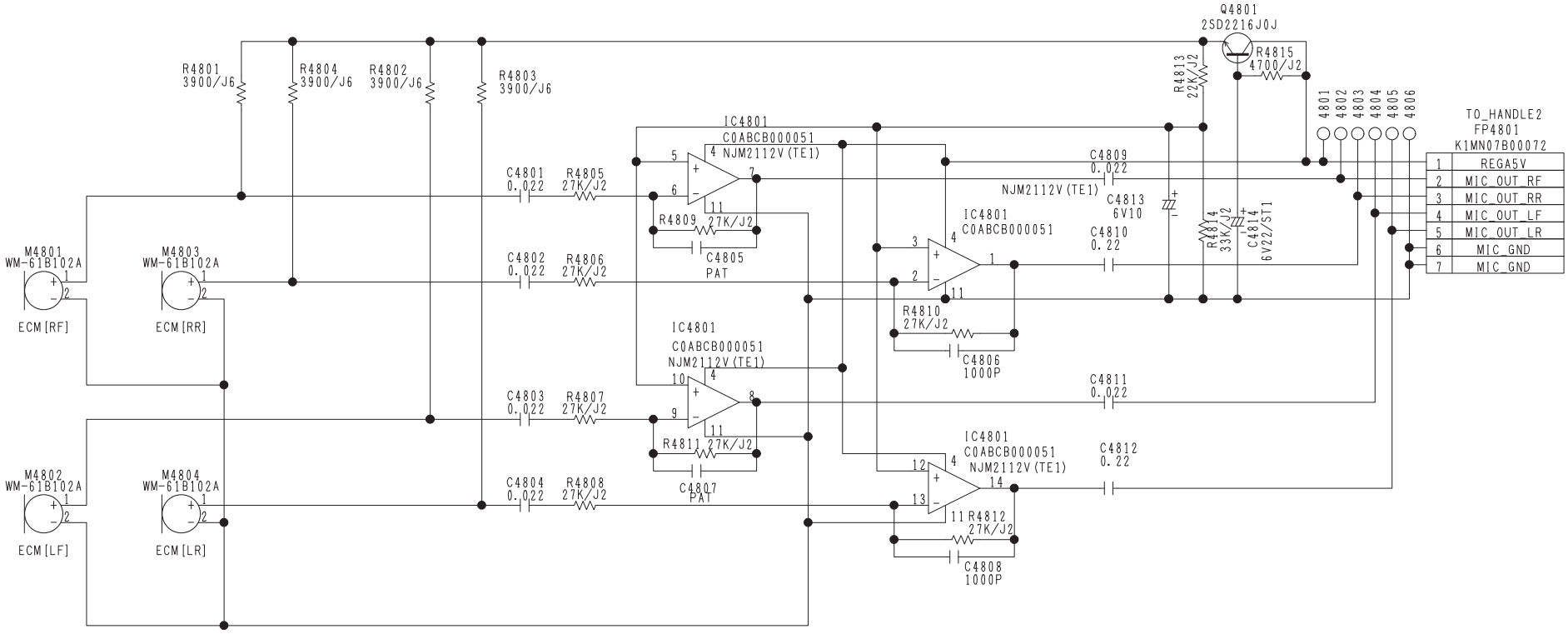


Ref No. 4800 Series.

| COMPONENT NAME | MIC | 01/01 |
|---|---|---|
| CIRCUIT BOARD NO. | | DRAWING NO. |
| VEP04828A | | KR4L33 (1/1) |
| | | SCM032 |

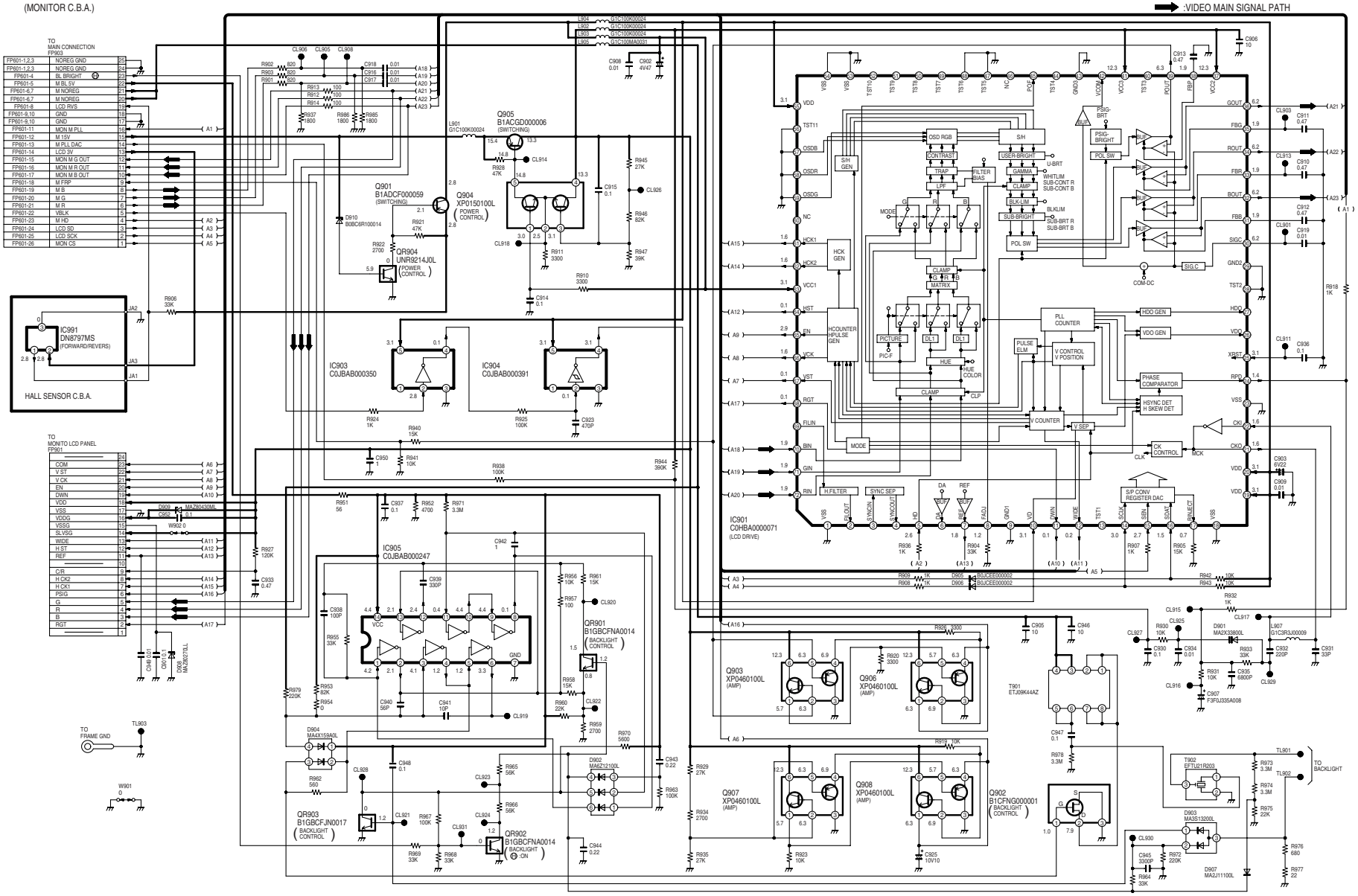


| COMPONENT NAME | MONITOR | 01/01 |
|---|---|---|
| CIRCUIT BOARD NO. | | DRAWING NO. |
| VEP26257B | | (1/1) |
| | | SCM033 |

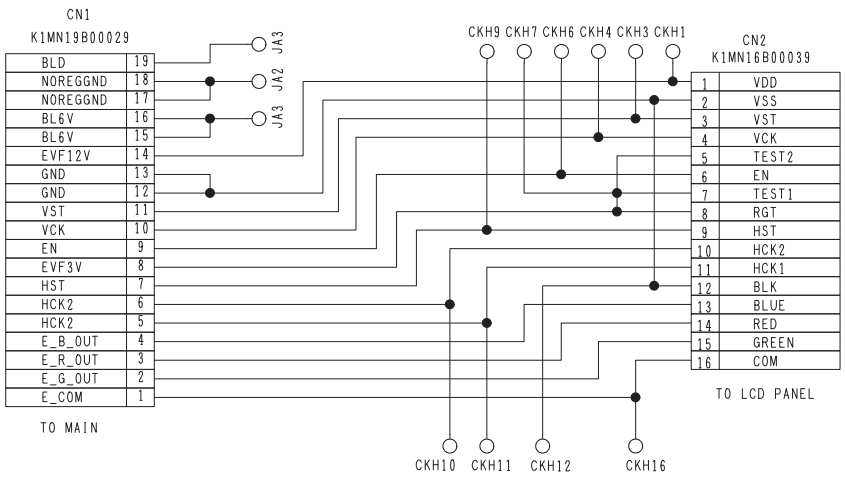


| COMPONENT NAME | EVF_A | 01/01 |
|---|---|---|
| CIRCUIT BOARD NO. | DRAWING NO. | |
| VEP28272B | KR8840 (1/1) | |
| | SCM034 | |

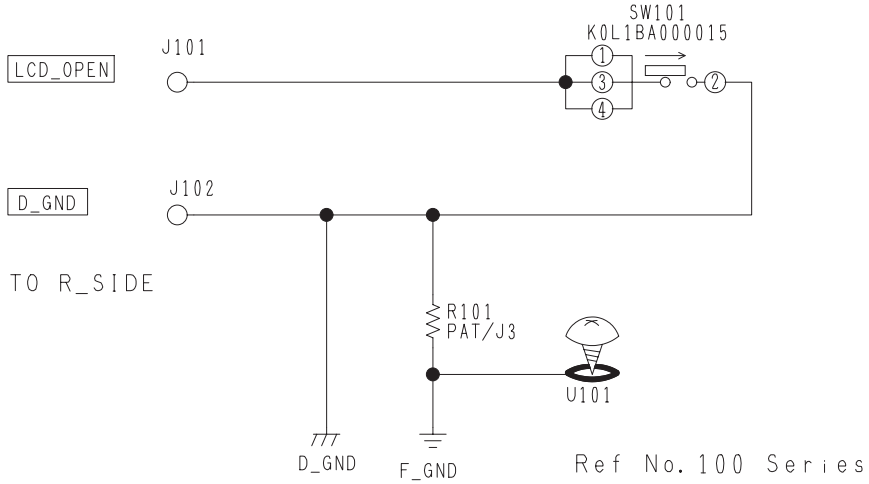


| COMPONENT NAME | LCD_OPEN | 01/01 |
|---|---|---|
| CIRCUIT BOARD NO. | DRAWING NO. | |
| VEP001E1A | KR0A0071 (1/1) | |
| | SCM034 | |

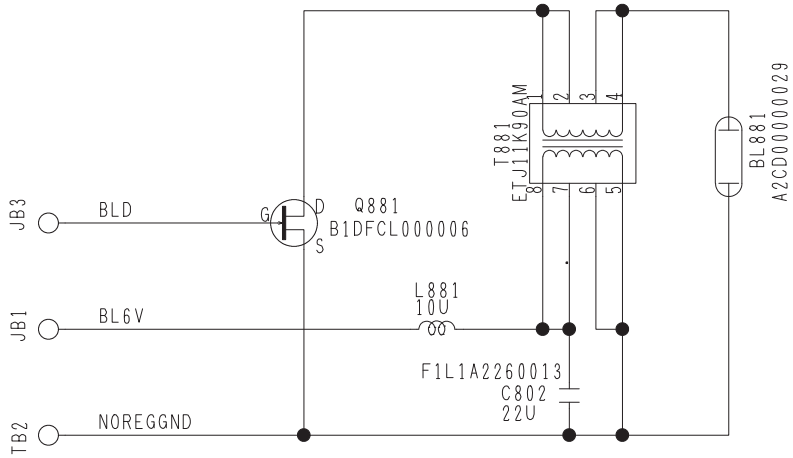


| COMPONENT NAME | EVF_B | 01/01 |
|---|---|---|
| CIRCUIT BOARD NO. | DRAWING NO. | |
| VEP28275B | KR8841 (1/1) | |
| | SCM034 | |

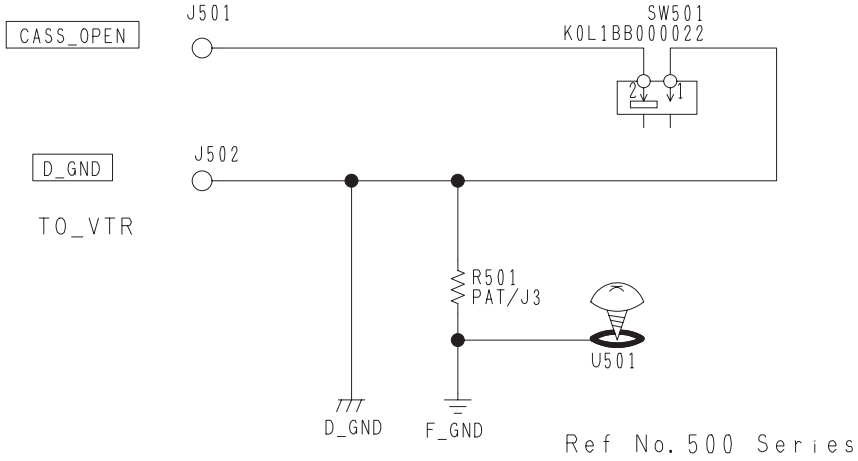


| COMPONENT NAME | CAS_OPEN | 01/01 |
|---|---|---|
| CIRCUIT BOARD NO. | DRAWING NO. | |
| VEP001E5A | KR0A0075 (1/1) | |
| | SCM034 | |

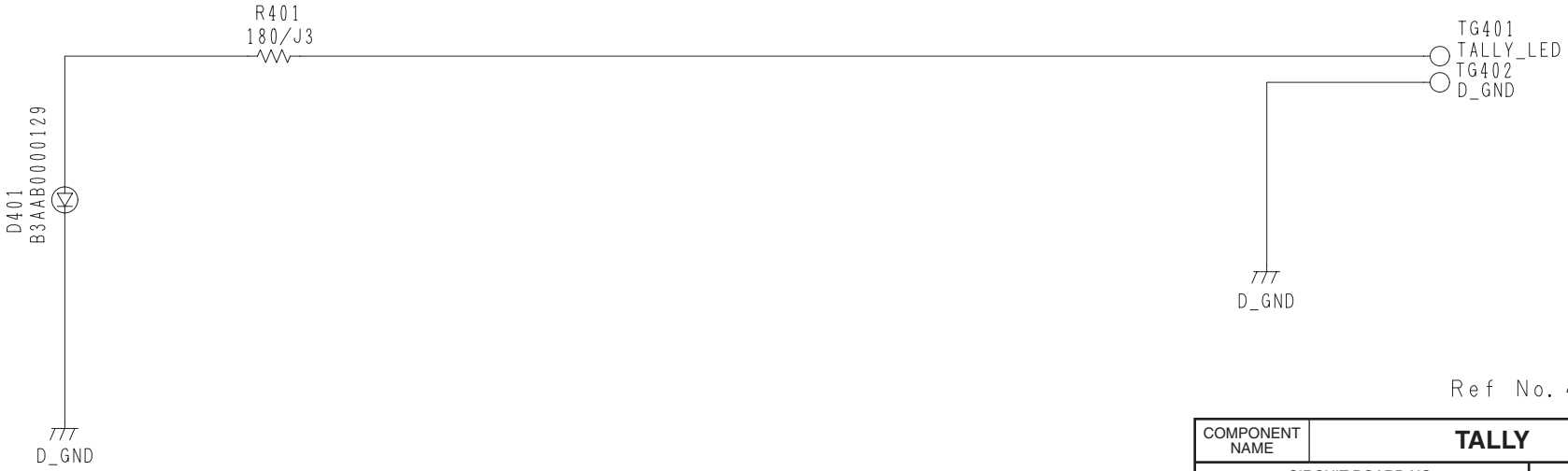


Ref No. 400 Series

| COMPONENT NAME | TALLY | 01/01 |
|---|---|---|
| CIRCUIT BOARD NO. | DRAWING NO. | |
| VEP001E4A | KR0A0074 (1/1) | |
| | SCM035 | |

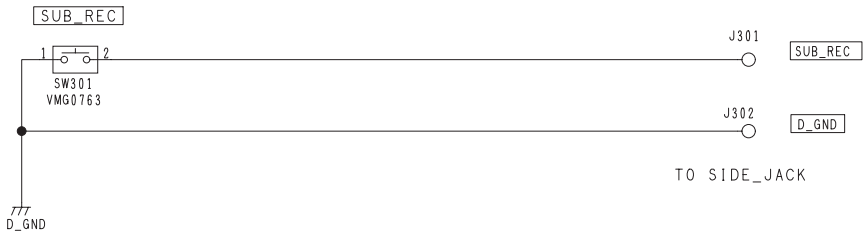


Ref No. 301 Series

| COMPONENT NAME | SUB_REC | 01/01 |
|---|---|---|
| CIRCUIT BOARD NO. | DRAWING NO. | |
| VEP001G1A | KR0A0147 (1/1) | |
| | SCM035 | |

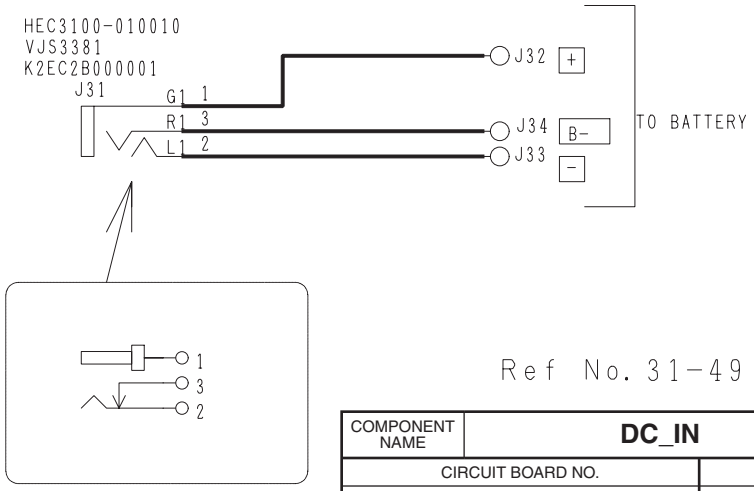


Ref No. 31-49 Series

| COMPONENT NAME | DC_IN | 01/01 |
|---|---|---|
| CIRCUIT BOARD NO. | DRAWING NO. | |
| VEP01957A | KR1A0062 (1/1) | |
| | SCM035 | |

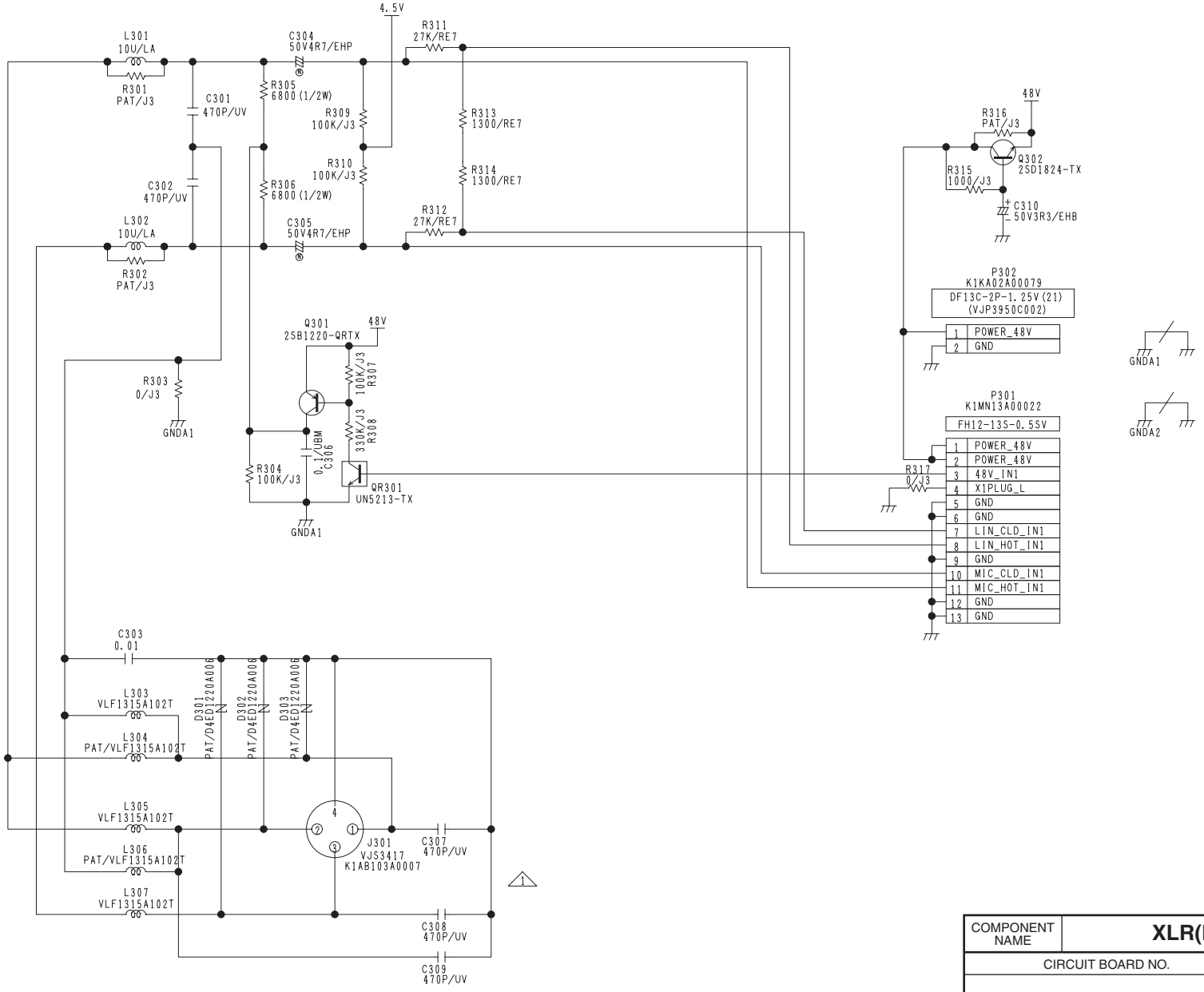


| COMPONENT NAME | XLR(INPUT1) | 01/02 |
|---|---|---|
| CIRCUIT BOARD NO. | | DRAWING NO. |
| VEP04869A | | KR4A0053 (1/2) |
| | | SCM036 |

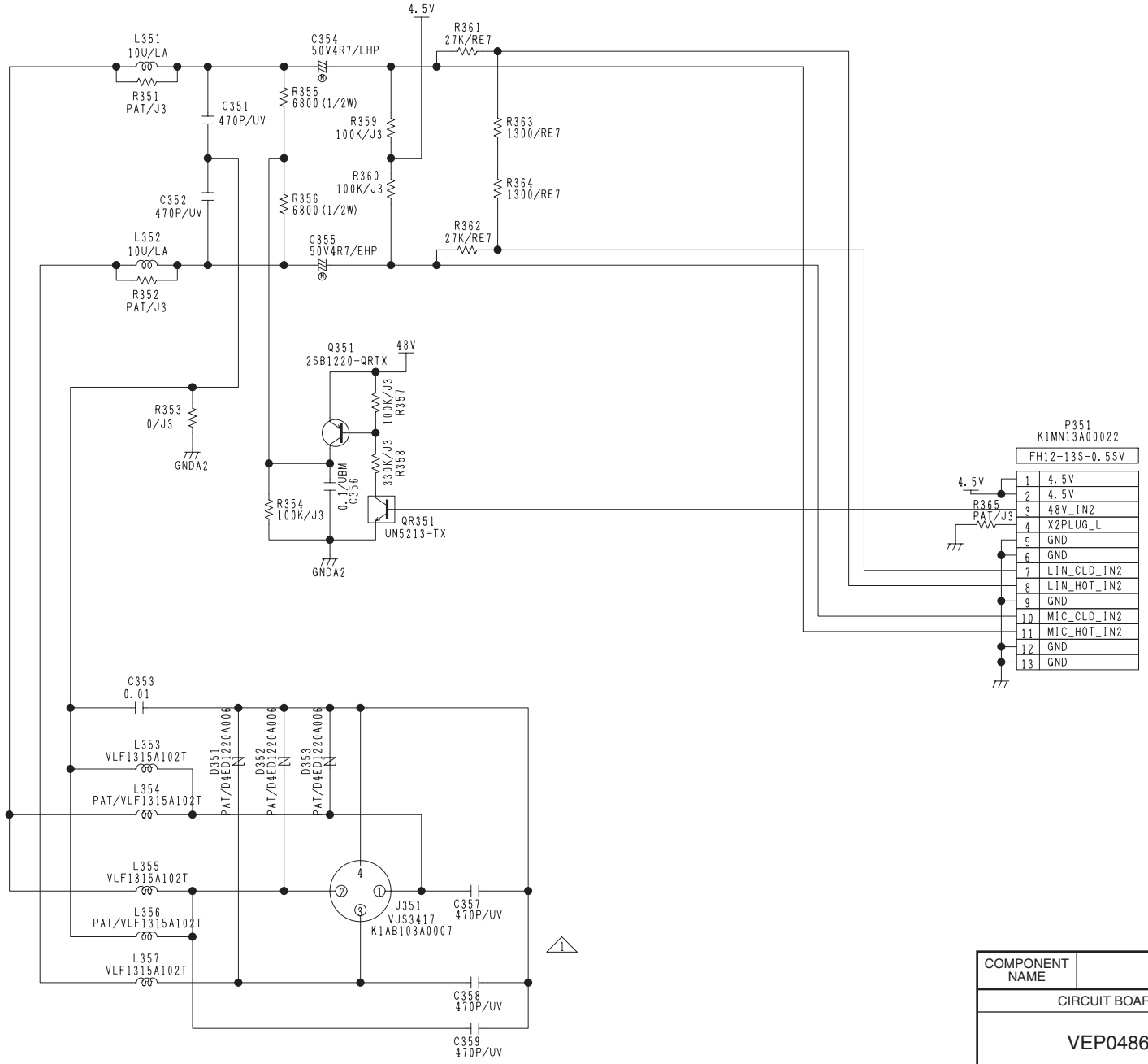


| COMPONENT NAME | XLR(INPUT2) | 02/02 |
|---|---|---|
| CIRCUIT BOARD NO. | | DRAWING NO. |
| VEP04869A | | KR4A0053 (2/2) |
| | | SCM037 |

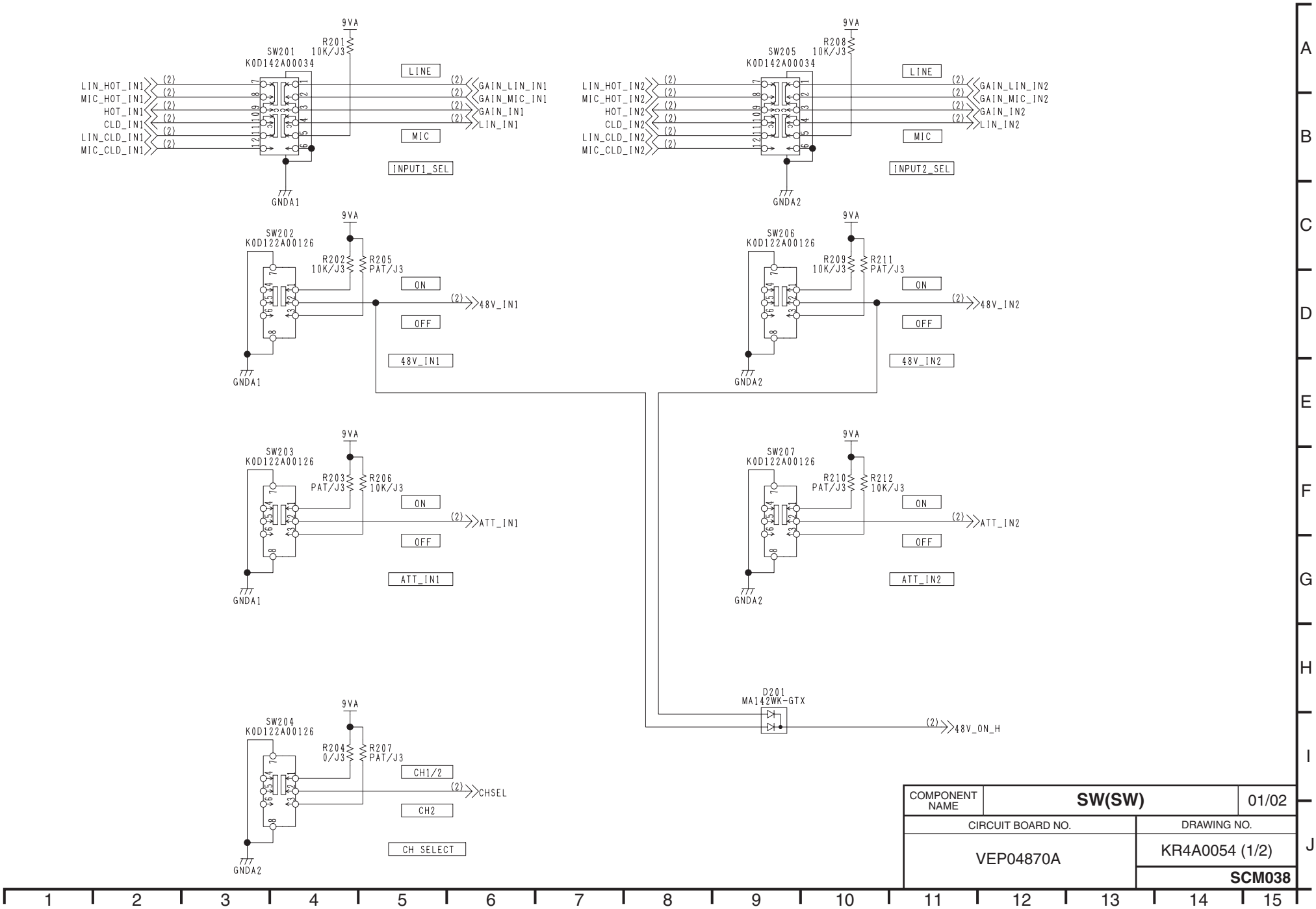


| COMPONENT NAME | SW(SW) | 01/02 |
|---|---|---|
| CIRCUIT BOARD NO. | | DRAWING NO. |
| VEP04870A | | KR4A0054 (1/2) |
| | | SCM038 |

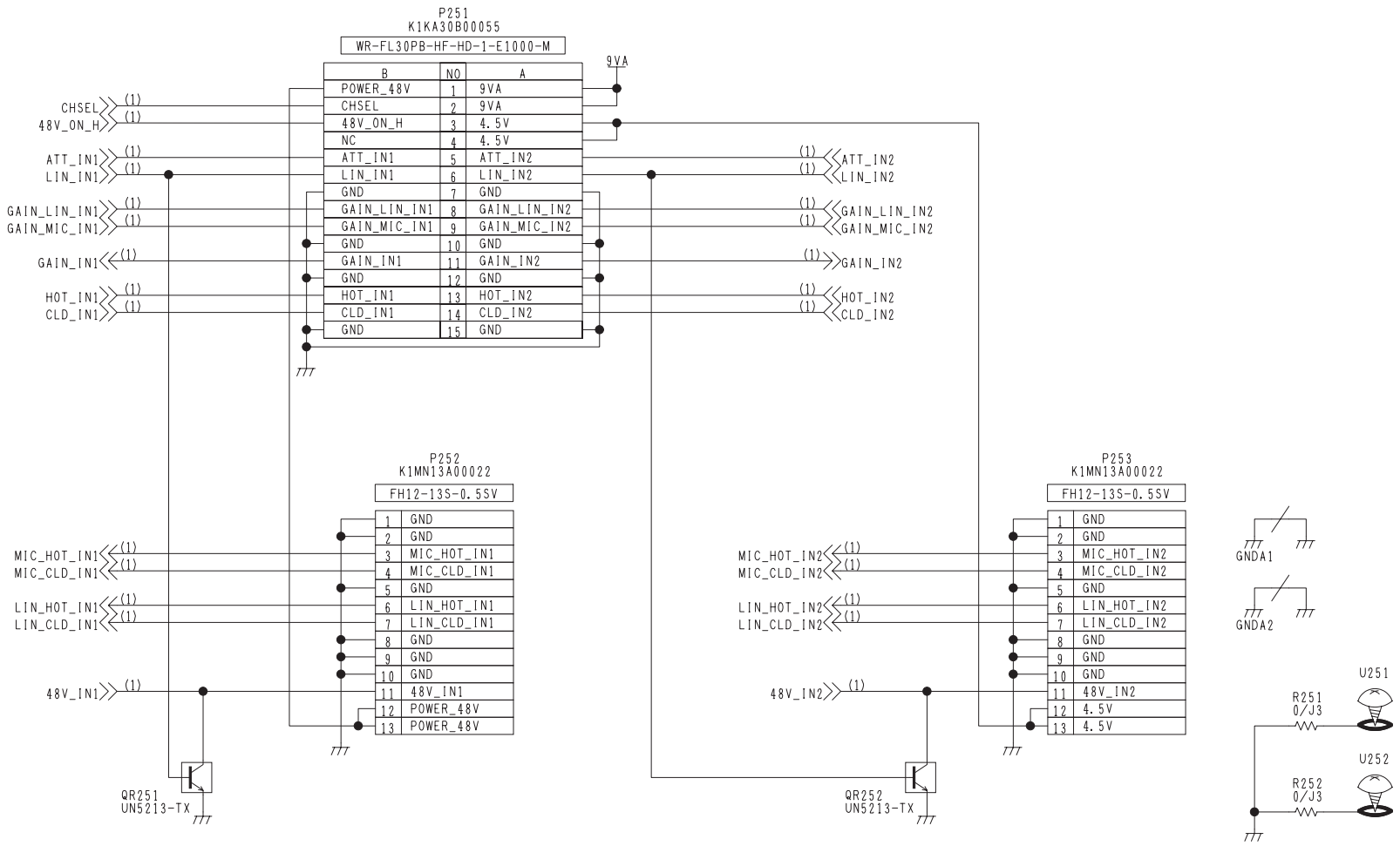


| COMPONENT NAME | SW(CN) | 02/02 |
|---|---|---|
| CIRCUIT BOARD NO. | | DRAWING NO. |
| VEP04870A | | KR4A0054 (2/2) |
| | | SCM039 |

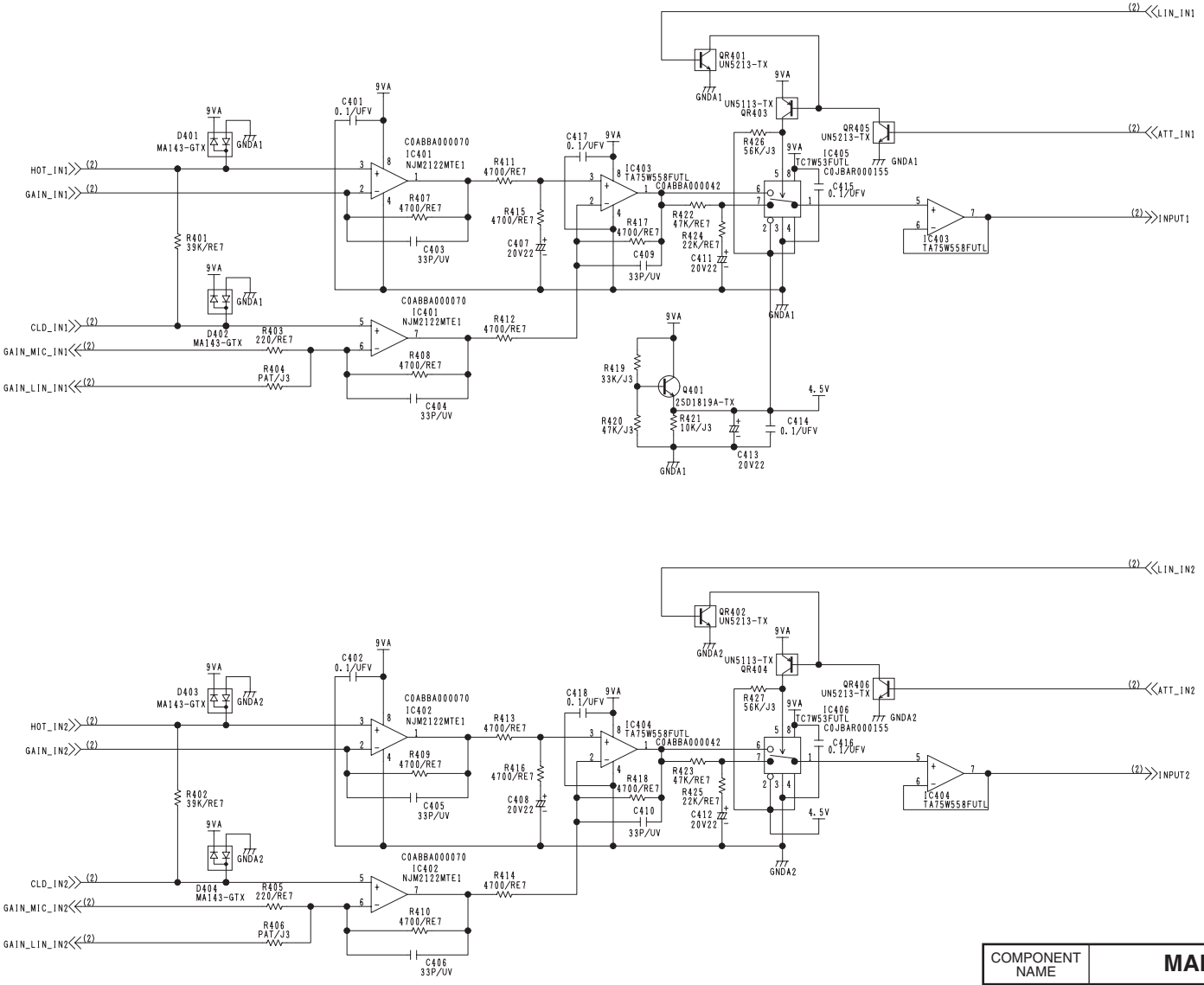


| COMPONENT NAME | MAIN(GAIN_SEL) | 01/02 |
|---|---|---|
| CIRCUIT BOARD NO. | | DRAWING NO. |
| VEP04875A | | KR4A0065 (1/2) |
| | | SCM040 |

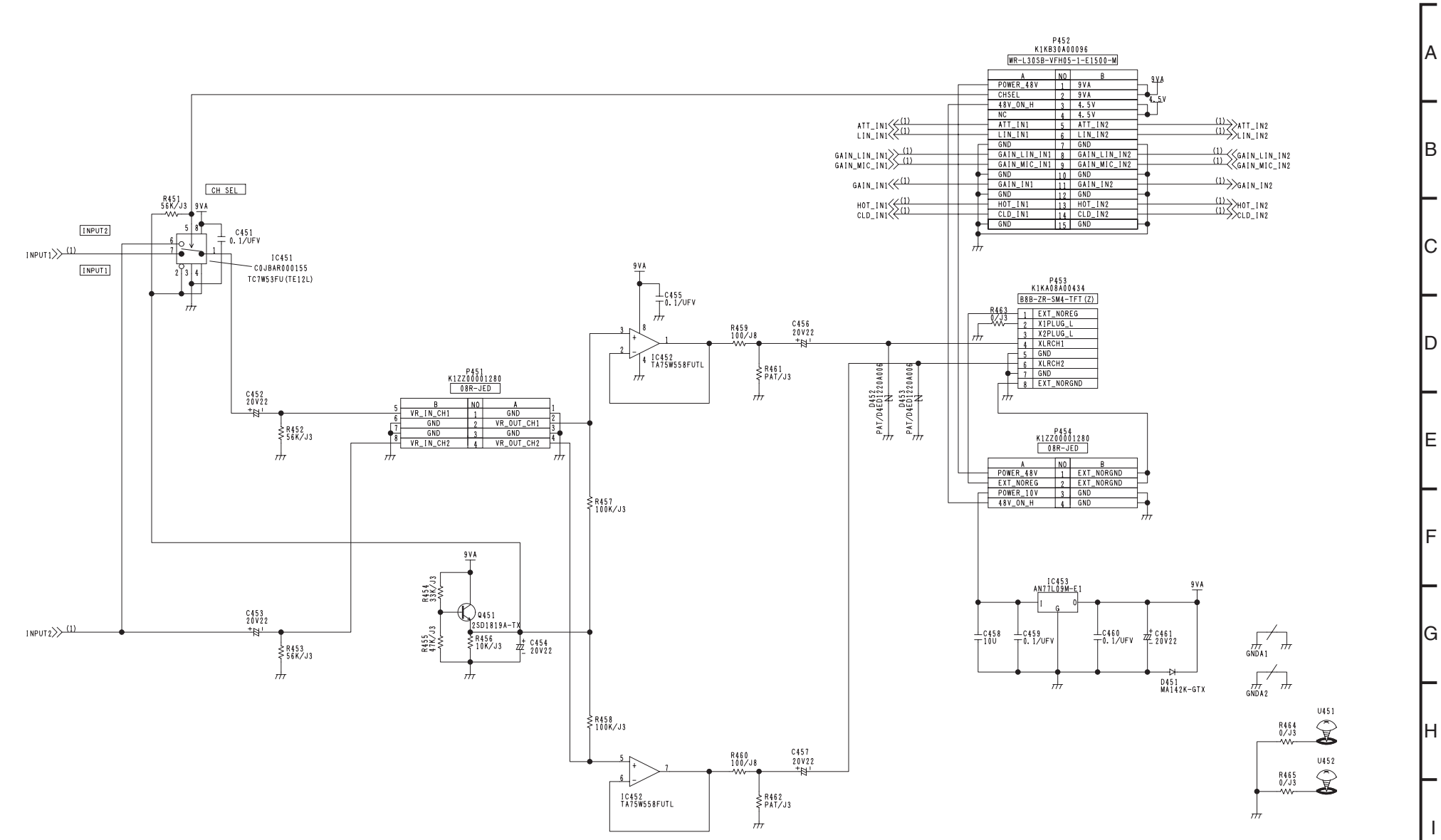


| COMPONENT NAME | MAIN(VR_I/O) | 02/02 |
|---|---|---|
| CIRCUIT BOARD NO. | | DRAWING NO. |
| VEP04875A | | KR4A0065 (2/2) |
| | | SCM041 |

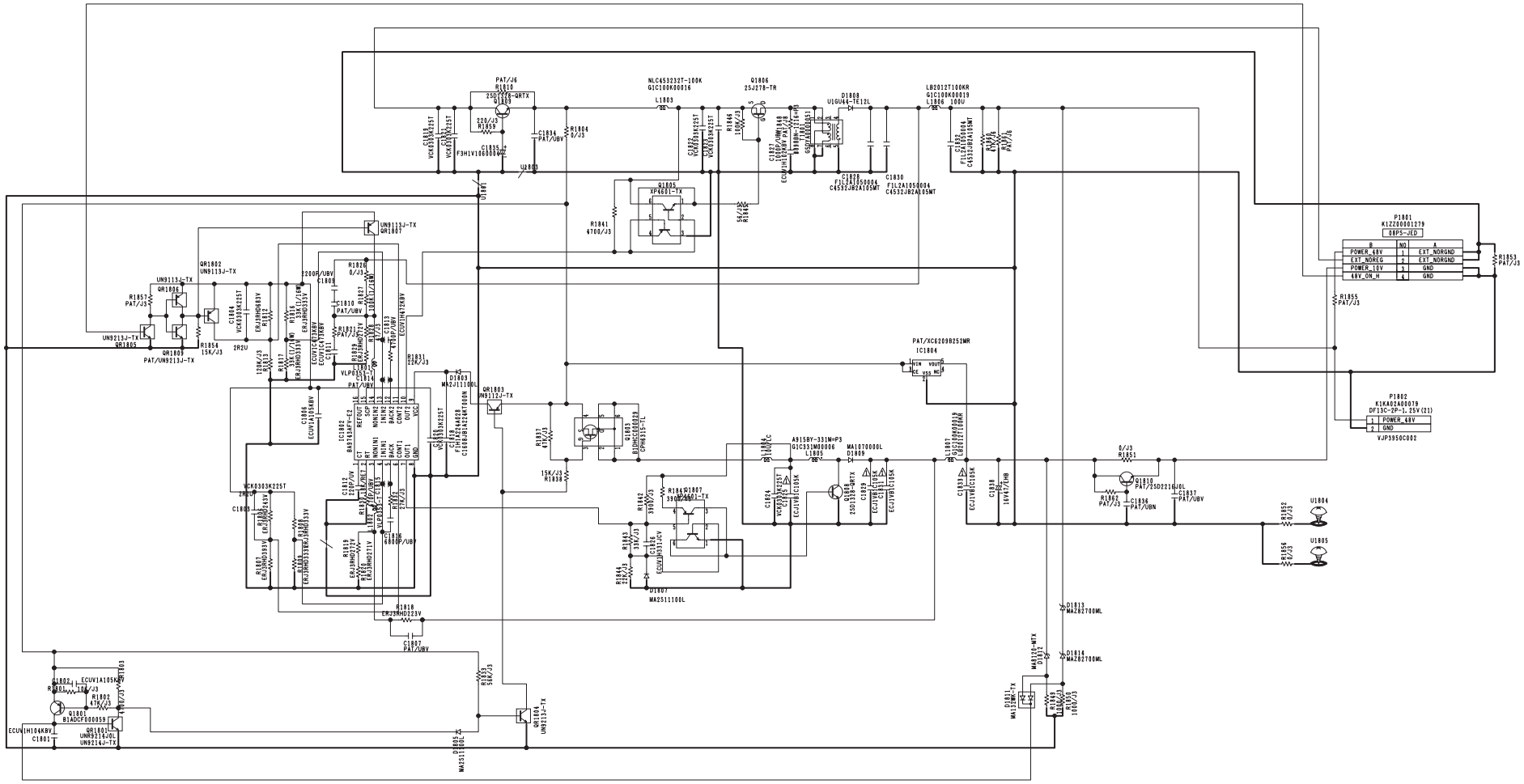

PAT=PATTERN ONLY
Ref No. 1800 Series.

| COMPONENT NAME | POWER | 01/01 |
|---|---|---|
| CIRCUIT BOARD NO. | | DRAWING NO. |
| VEP01956A | | KR1A0054 (1/1) |
| | | SCM042 |

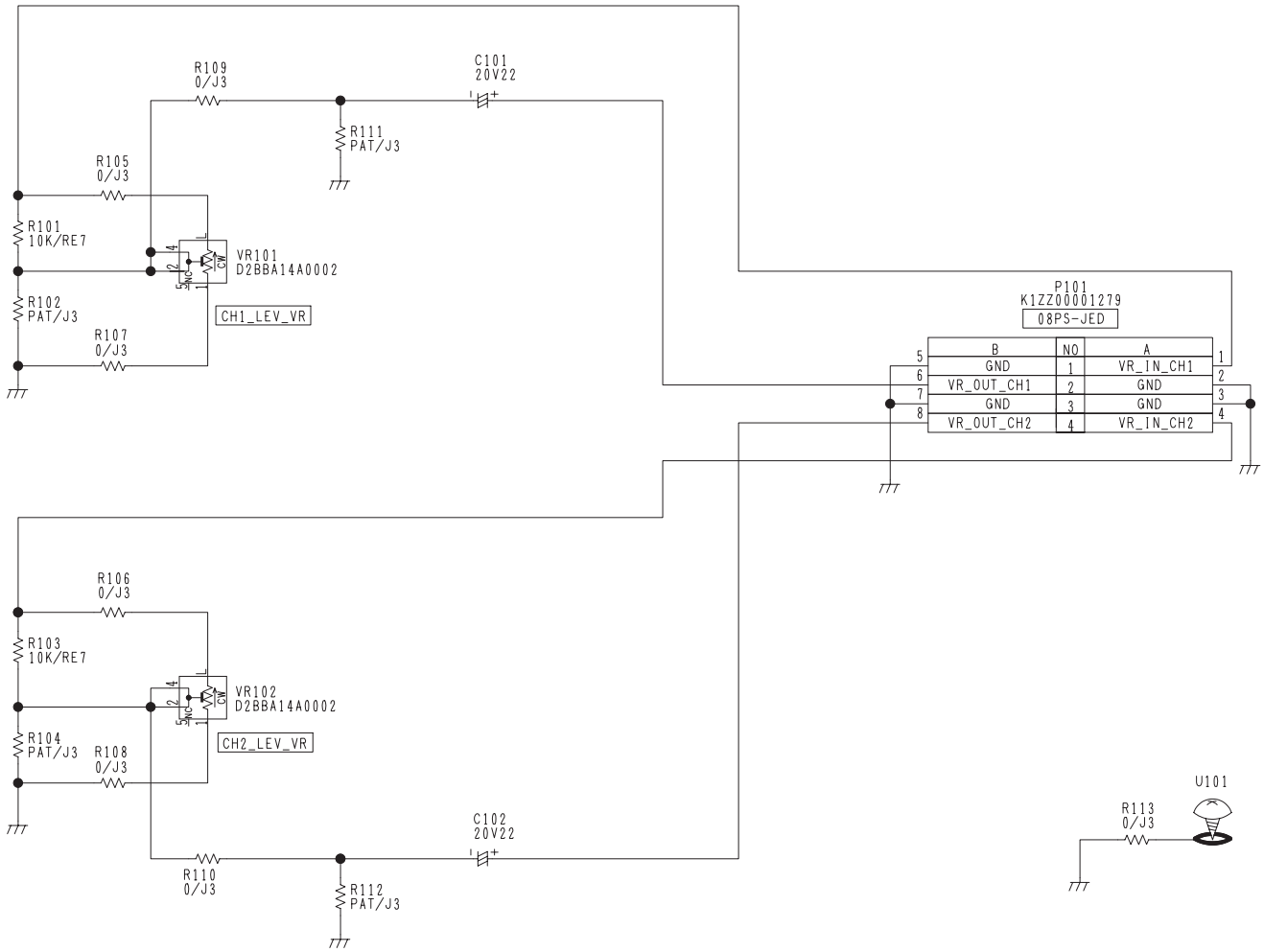


| COMPONENT NAME | VR | 01/01 |
|---|---|---|
| CIRCUIT BOARD NO. | | DRAWING NO. |
| VEP04871A | | KR4A0055 (1/1) |
| | | SCM043 |

# SECTION 7

# CIRCUIT BOARD DIAGRAMS

**NOTE:**
BE SURE TO MAKE YOUR ORDERS OF REPLACEMENT PARTS ACCORDING TO PARTS LIST, SECTION 8

**CAUTION**

THE ▭ MARK INDICATES THE PRIMARY CIRCUIT TO DISTINGUISH THE PRIMARY FROM THE SECONDARY CIRCUIT.
PAY ATTENTION NOT TO RECEIVE AN ELECTRIC SHOCK DURING REPAIR AND SERVICE OF THE PRODUCTS.

**IMPORTANT SAFETY NOTICE:**
COMPONENTS IDENTIFIED WITH THE MARK ⚠ HAVE THE SPECIAL CHARACTERISTICS FOR SAFETY.
WHEN REPLACING ANY OF THESE COMPONENTS, USE ONLY THE SAME TYPE.

## CONTENTS


VTR C.B.A. (NTSC model: VEP03G60A) (PAL model: VEP03G60B) (FOIL SIDE).....CBA-1
VTR C.B.A. (NTSC model: VEP03G60A) (PAL model: VEP03G60B) (COMPONENT SIDE) .....CBA-2
CAMERA C.B.A. (NTSC model: VEP23598A) (PAL model: VEP23598B) (FOIL SIDE) .....CBA-3
CAMERA C.B.A. (NTSC model: VEP23598A) (PAL model: VEP23598B) (COMPONENT SIDE).....CBA-4
POWER C.B.A. (VEP01952A) (FOIL SIDE).....CBA-5
POWER C.B.A. (VEP01952A) (COMPONENT SIDE) .....CBA-6

# VTR C.B.A. (NTSC model: VEP03G60A)
# (PAL model: VEP03G60B)

FOIL SIDE

| REF | LOC | REF | LOC | REF | LOC | REF | LOC | REF | LOC | REF | LOC | REF | LOC |
|---|---|---|---|---|---|---|---|---|---|---|---|---|---|
| IC2001 | B3 | IC3501 | C4 | IC601 | A2 | Q2007 | A4 | Q4003 | D1 | QR2002 | B4 | QR3501 | C5 |
| IC2011 | C3 | IC3502 | D4 | IC602 | A2 | Q3101 | C3 | Q4004 | D2 | QR2003 | C3 | QR3502 | C5 |
| IC2012 | B2 | IC3503 | C3 | P2210 | E5 | Q3102 | D3 | Q601 | A1 | QR2006 | A4 | QR604 | A1 |
| IC2013 | C3 | IC4002 | E1 | P2214 | D5 | Q3103 | D2 | Q602 | B1 | QR2007 | B4 | TP3001 | B4 |
| IC2014 | C3 | IC4003 | D1 | P2221 | A3 | Q3501 | C5 | Q603 | B1 | QR2011 | C3 | TP3002 | B4 |
| IC3002 | C2 | IC4004 | E1 | Q2001 | C3 | Q3503 | C4 | Q605 | A2 | QR2012 | C3 | | |
| IC3005 | C1 | IC4005 | D1 | Q2002 | A4 | Q3504 | C3 | Q608 | A1 | QR3101 | C3 | | |
| IC3201 | D4 | IC4008 | D2 | Q2003 | A4 | Q3505 | C3 | Q611 | A2 | QR3102 | C3 | | |
| IC3202 | B4 | IC5001 | E5 | Q2004 | C3 | Q3506 | C3 | QR2001 | B3 | QR3104 | D1 | | |

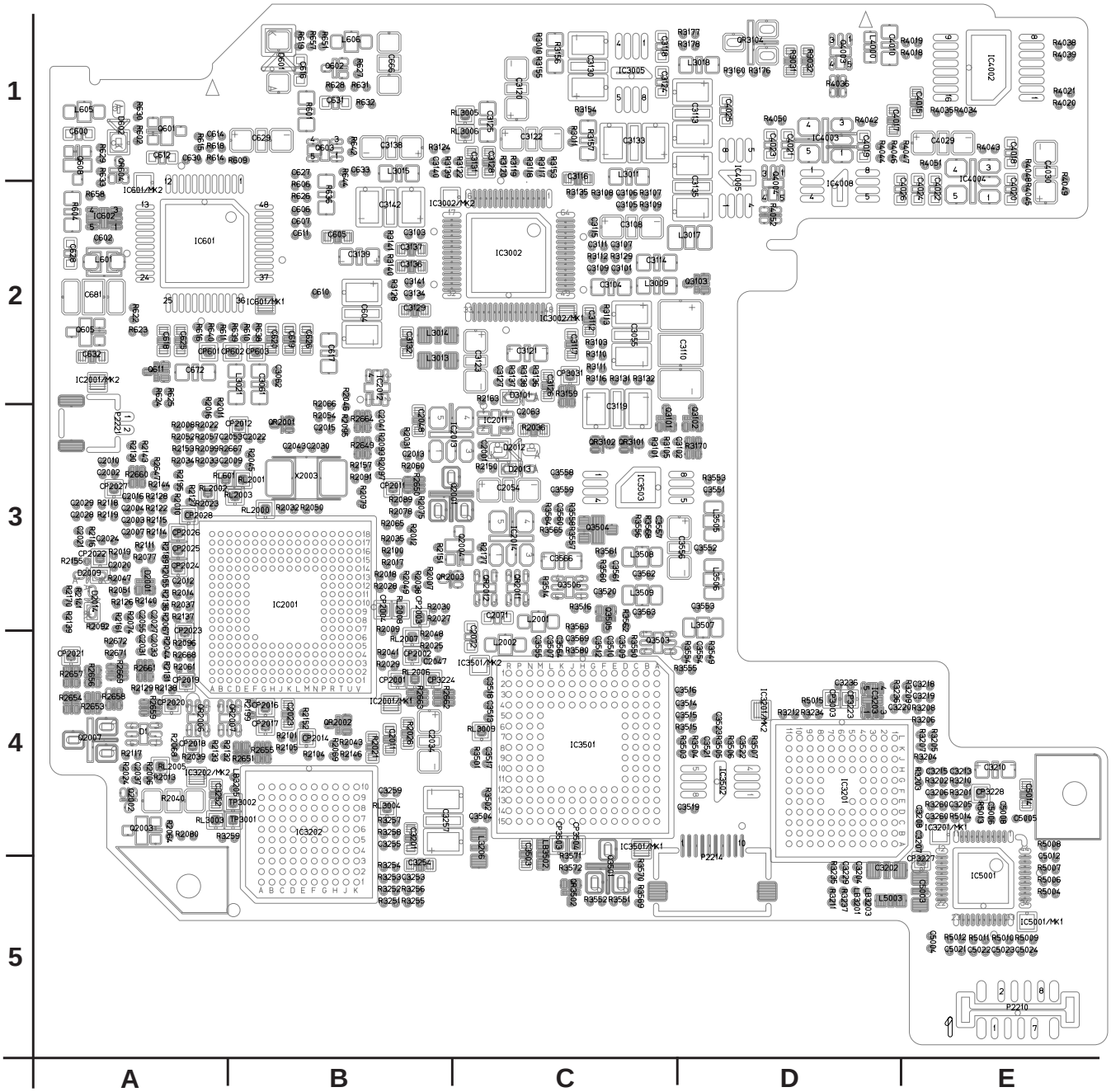


(FOIL SIDE)

# VTR C.B.A. (NTSC model: VEP03G60A)
# (PAL model: VEP03G60B)

COMPONENT SIDE

| REF | LOC | REF | LOC | REF | LOC | REF | LOC | REF | LOC |
|---|---|---|---|---|---|---|---|---|---|
| IC2005 | C3 | IC3007 | D2 | P2211 | B5 | P2220 | B4 | TP3013 | C3 |
| IC2007 | D3 | IC3008 | E2 | P2212 | C5 | P2222 | A1 | TP9001 | E4 |
| IC2008 | E3 | IC3009 | C3 | P2213 | D5 | P2224 | A5 | TG9040 | C3 |
| IC2201 | D4 | IC4000 | C1 | P2215 | B1 | Q4000 | B1 | TG9039 | D1 |
| IC3001 | D2 | IC4001 | B1 | P2216 | E4 | Q4001 | B2 | TPG | E4 |
| IC3004 | C2 | P2200 | E2 | P2217 | A1 | Q4002 | C1 | | |
| IC3006 | D2 | P2201 | B4 | P2219 | D1 | TP3012 | C3 | | |

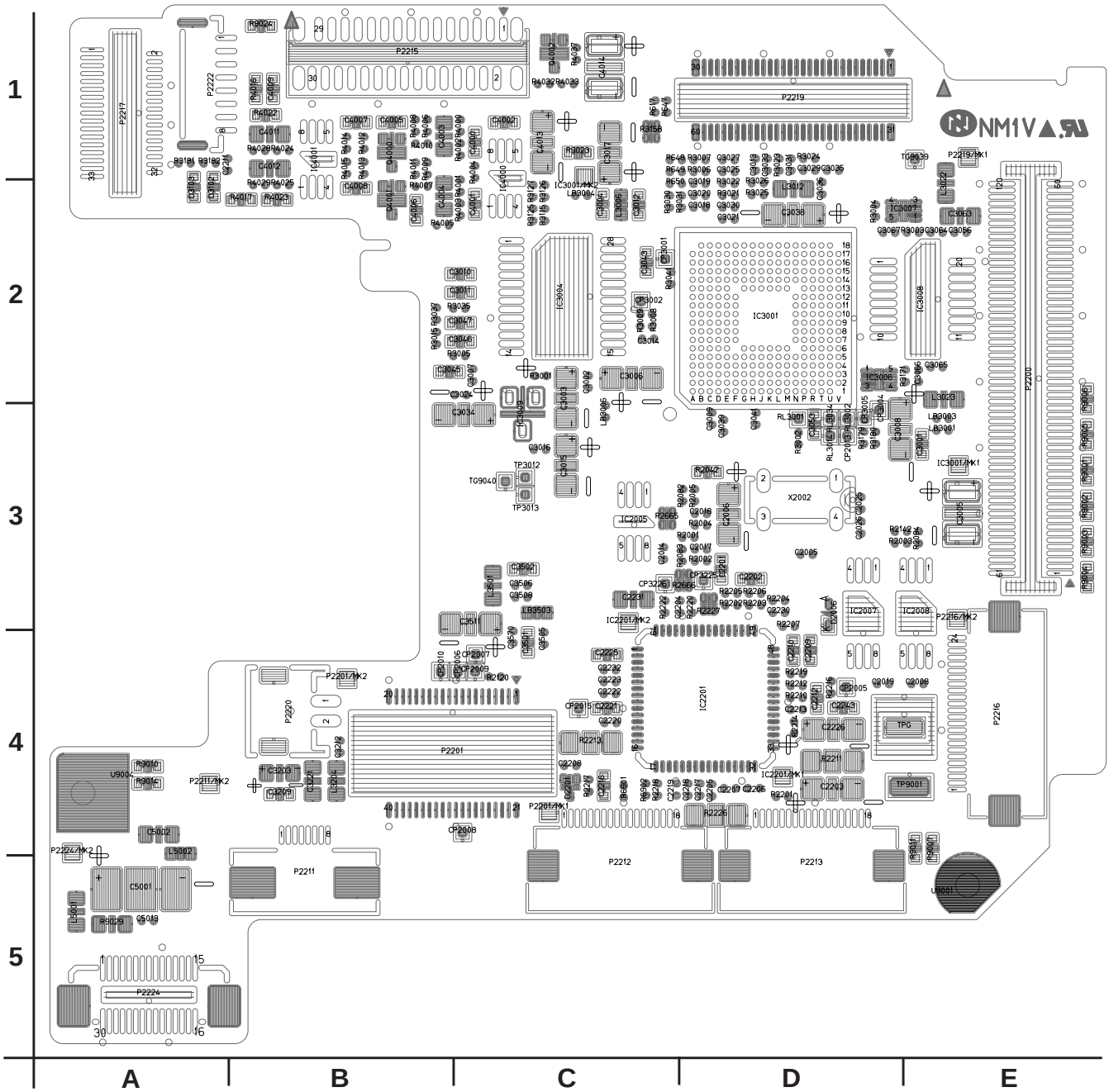


**(COMPONENT SIDE)**

# CAMERA C.B.A. (NTSC model: VEP23598A)
# (PAL model: VEP23598B)

FOIL SIDE

| REF | LOC | REF | LOC | REF | LOC | REF | LOC |
|---|---|---|---|---|---|---|---|
| IC1000 | B4 | IC3003 | C2 | Q3001 | B2 | TP1004 | B4 |
| IC1019 | A4 | IC3500 | B2 | Q927 | E5 | | |
| IC1022 | D3 | IC4105 | A2 | Q928 | E4 | | |
| IC1023 | D3 | IC701 | D5 | QR708 | A4 | | |
| IC104 | D1 | IC711 | A4 | QR709 | B4 | | |
| IC105 | C2 | IC717 | A4 | TP1000 | B4 | | |
| IC3000 | B5 | P2 | A2 | TP1001 | B4 | | |
| IC3001 | C5 | P3 | E5 | TP1002 | B4 | | |
| IC3002 | B2 | P6 | D4 | TP1003 | C3 | | |

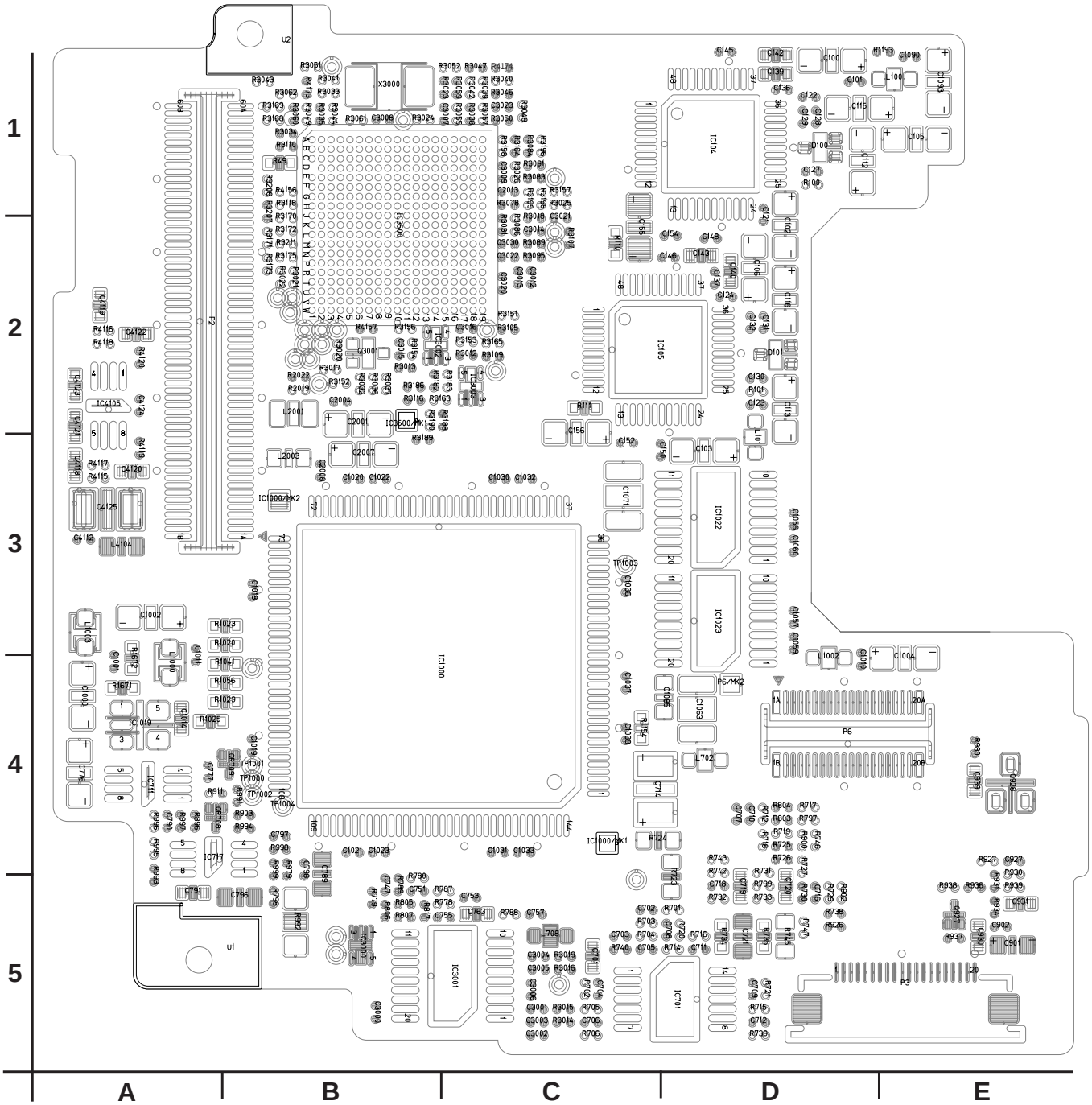


**(FOIL SIDE)**

# CAMERA C.B.A. (NTSC model: VEP23598A)
# (PAL model: VEP23598B)

COMPONENT SIDE

| REF | LOC | REF | LOC | REF | LOC | REF | LOC | REF | LOC | REF | LOC | REF | LOC |
|---|---|---|---|---|---|---|---|---|---|---|---|---|---|
| IC1 | D3 | IC1010 | B1 | IC106 | C2 | IC704 | C4 | P5 | E2 | Q1651 | E4 | QR1601 | E4 |
| IC1001 | C3 | IC1011 | A1 | IC2 | D3 | IC710 | D4 | P7 | A4 | Q1652 | D4 | QR1602 | D3 |
| IC1002 | C3 | IC1013 | B3 | IC2000 | E2 | IC713 | E4 | P8 | B5 | Q1653 | D4 | QR1651 | D4 |
| IC1003 | C3 | IC1014 | B3 | IC2002 | E2 | IC719 | E3 | Q1601 | E4 | Q1654 | D4 | QR3000 | D1 |
| IC1004 | B3 | IC1015 | B2 | IC2003 | C2 | IC927 | A5 | Q1602 | E3 | Q3000 | E1 | QR3001 | D1 |
| IC1005 | B2 | IC1016 | B2 | IC3005 | D1 | IC928 | B4 | Q1603 | E3 | Q701 | B5 | QR3002 | E1 |
| IC1006 | B3 | IC1024 | A1 | IC3006 | E1 | IC929 | A4 | Q1604 | E4 | Q702 | E2 | QR3003 | D1 |
| IC1007 | C3 | IC1025 | B3 | IC702 | B4 | P1 | B1 | Q1605 | D3 | Q708 | E3 | QR701 | E2 |
| IC1008 | C2 | IC1026 | C3 | IC703 | E4 | P4 | D5 | Q1606 | D3 | Q709 | B4 | QR705 | E3 |

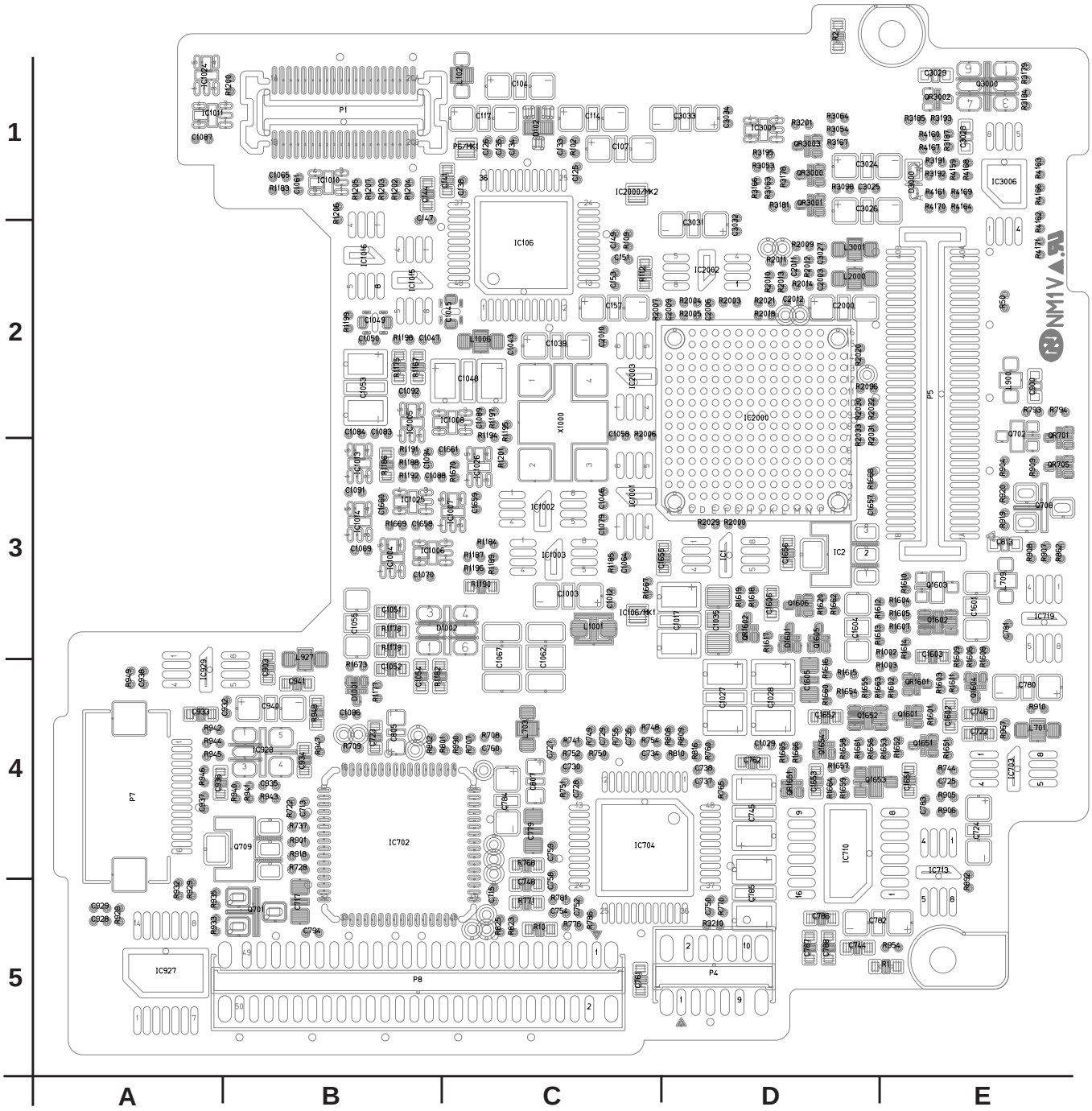


(COMPONENT SIDE)

# POWER C.B.A. (VEP01952A)

**IMPORTANT SAFETY NOTICE:**
COMPONENTS IDENTIFIED WITH THE MARK ⚠ HAVE THE SPECIAL CHARACTERISTICS FOR SAFETY.
WHEN REPLACING ANY OF THESE COMPONENTS, USE ONLY THE SAME TYPE.

⚠ 警 告

⚠ 印の部品は安全上重要な部品です。
交換するときは、安全上および性能維持のため
必ず指定の部品をご使用ください。

FOIL SIDE

| REF | LOC | REF | LOC |
|---|---|---|---|
| IC1001 | B3 | Q1062 | C4 |
| IC1321 | B3 | Q1603 | A3 |
| IC1601 | A3 | QR1101 | A4 |
| IC1602 | B2 | QR1102 | A4 |
| IC1923 | D1 | QR1601 | A3 |
| IP1003 | C3 | QR1602 | A3 |
| P1011 | B4 | QR1603 | A4 |
| Q1061 | C4 | QR1681 | B4 |

**(FOIL SIDE)**

# POWER C.B.A. (VEP01952A)

**IMPORTANT SAFETY NOTICE:**
COMPONENTS IDENTIFIED WITH THE MARK ⚠ HAVE THE SPECIAL CHARACTERISTICS FOR SAFETY.
WHEN REPLACING ANY OF THESE COMPONENTS, USE ONLY THE SAME TYPE.

⚠ 警 告

⚠ 印の部品は安全上重要な部品です。
交換するときは、安全上および性能維持のため
必ず指定の部品をご使用ください。

COMPONENT SIDE

| REF | LOC | REF | LOC |
|---|---|---|---|
| IC1901 | B1 | Q1042 | C3 |
| IC1922 | B1 | Q1051 | C2 |
| IP1001 | A3 | Q1322 | C4 |
| P1001 | A3 | Q1601 | D3 |
| Q1003 | A3 | Q1602 | D3 |
| Q1011 | B3 | Q1611 | D3 |
| Q1021 | B3 | Q1612 | D3 |
| Q1022 | B3 | QR1001 | B2 |
| Q1041 | C3 | TP1601 | B3 |

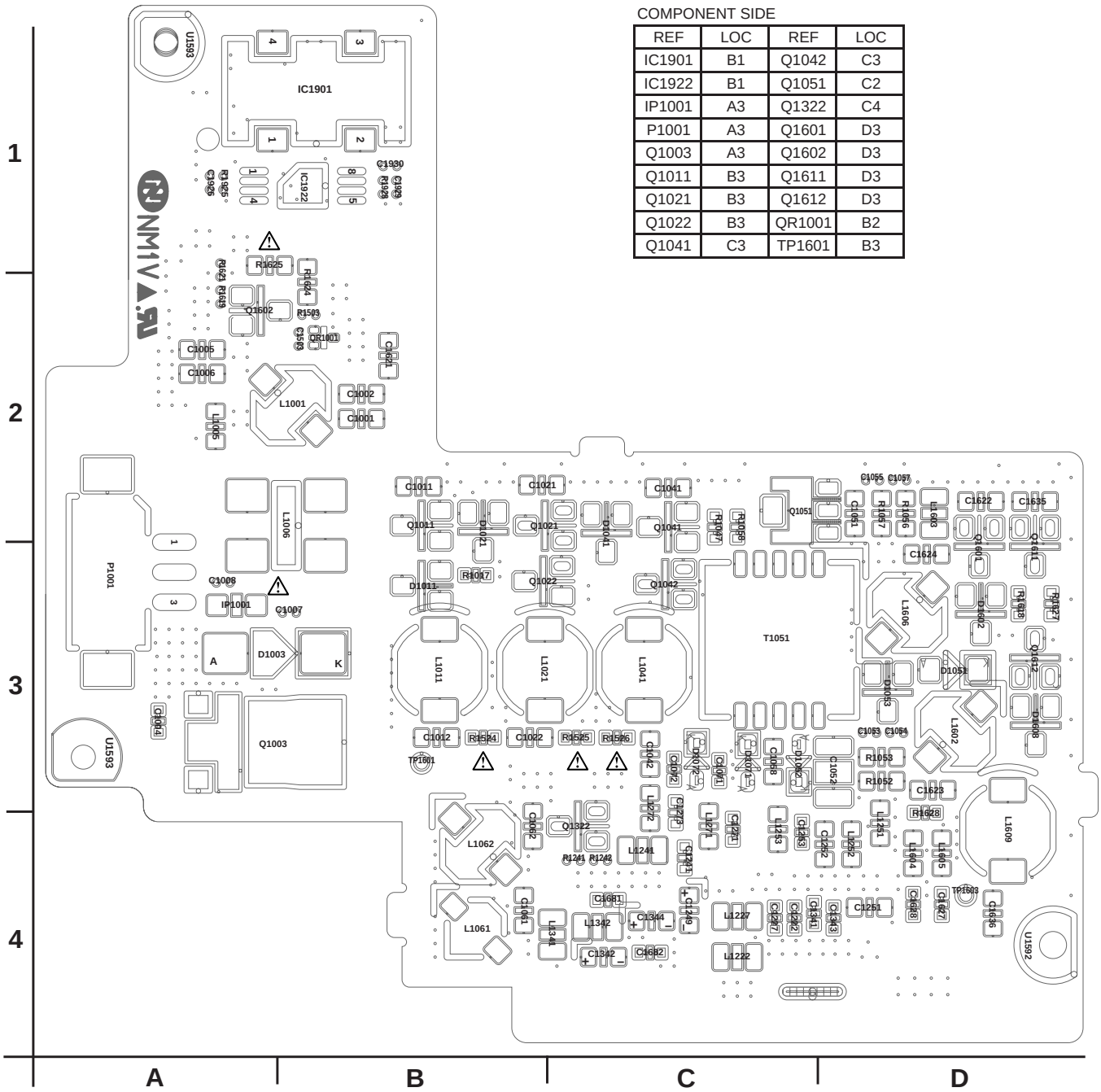


(COMPONENT SIDE)

# SECTION 8

# EXPLODED VIEWS
# &
# REPLACEMENT PARTS LIST

Note:

1. *Be sure to make your orders of replacement parts according to this list.
2. Unless otherwise specified, all resistors are in OHMS, K=1,000 OHMS, all capacitors are in MICROFARADS (μF), P=μμF.
3. The P.C. Board unit marked with "■" shown below the main assembled parts.
4. The parts marked with Ⓔ on the exploded view show the electric parts.
5. IMPORTANT SAFETY NOTICE
   Components identified with the mark ⚠ have the special characteristics for safety. When replacing any of these components, use only the same type.
6. The marking (RTL) indicates the retention time is limited for this item.
   After the discontinuation of this assembly in production, it will no longer be available.
7. "(M)" in Remark column indicates needed in the periodical maintenance.

## CONTENTS


SERVICING FIXTURES & TOOLS

FRAME & CASING PARTS ASSEMBLY (1).....MPL-1

FRAME & CASING PARTS ASSEMBLY (2).....MPL-3

LCD PARTS ASSEMBLY.....MPL-5

PACKING PARTS ASSEMBLY.....MPL-7

CABINET PARTS ASSEMBLY (AG-MYA30G).....MPL-9

PACKING PARTS ASSEMBLY (AG-MYA30G).....MPL-11

ELECTRICAL REPLACEMENT PARTS LIST (AG-DVC30P).....EPL-1

ELECTRICAL REPLACEMENT PARTS LIST (AG-DVC30E, DVC32EN, DVC33MC).....EPL-15

ELECTRICAL REPLACEMENT PARTS LIST (AG-MYA30G).....EPL-29

| AG-DVC30P | | | | AG-DVC30E, DVC32EN, DVC33MC | | | |
|---|---|---|---|---|---|---|---|
| **Ref. No.** | **Parts No.** | **C.B.A.** | **Page** | **Ref. No.** | **Parts No.** | **C.B.A.** | **Page** |
| E1 | VEP01952A | POWER | EPL-1 | E1 | VEP01952A | POWER | EPL-15 |
| E2 | VEP03G60A | VTR | EPL-3 | E2 | VEP03G60B | VTR | EPL-17 |
| E3 | VEP23598A | CAMERA | EPL-7 | E3 | VEP23598B | CAMERA | EPL-21 |
| E4 | VEP06F67A | FRONT | EPL-11 | E4 | VEP06F67A | FRONT | EPL-25 |
| E5 | VEP04861A | SIDE JACK FPC | EPL-11 | E5 | VEP04861A | SIDE JACK FPC | EPL-25 |
| E6 | VEP001G1A | SUB REC | EPL-11 | E6 | VEP001G1A | SUB REC | EPL-25 |
| E7 | VEP01957A | DC IN | EPL-11 | E7 | VEP01957A | DC IN | EPL-25 |
| E8 | VEP01953A | BATTERY | EPL-11 | E8 | VEP01953A | BATTERY | EPL-25 |
| E9 | VEP06F66A | ZOOM FPC | EPL-12 | E9 | VEP06F66A | ZOOM FPC | EPL-26 |
| E10 | VEP001E3A | ZOOM CON | EPL-12 | E10 | VEP001E3A | ZOOM CON | EPL-26 |
| E11 | VEP001E5A | CAS OPEN | EPL-12 | E11 | VEP001E5A | CAS OPEN | EPL-26 |
| E12 | VEP04863A | REAR JACK | EPL-12 | E12 | VEP04863A | REAR JACK | EPL-26 |
| E13 | VEP001E8A | R-SIDE FPC | EPL-12 | E13 | VEP001E8A | R-SIDE FPC | EPL-26 |
| E14 | VEP06F68A | R-SIDE | EPL-12 | E14 | VEP06F68A | R-SIDE | EPL-26 |
| E15 | VEP06F64A | CAMARA OP | EPL-12 | E15 | VEP06F64A | CAMARA OP | EPL-26 |
| E16 | VEP001E1A | LCD OPEN | EPL-12 | E16 | VEP001E1A | LCD OPEN | EPL-26 |
| E17 | VEP001E4A | TALLY | EPL-12 | E17 | VEP001E4A | TALLY | EPL-26 |
| E18 | VEP001E0A | EVF CON | EPL-12 | E18 | VEP001E0A | EVF CON | EPL-26 |
| E19 | VEP04828A | MIC U | EPL-13 | E19 | VEP04828A | MIC U | EPL-27 |
| E20 | VEP28272B | EVF A | EPL-13 | E20 | VEP28272B | EVF A | EPL-27 |
| E21 | VEP28275B | EVF B | EPL-13 | E21 | VEP28275B | EVF B | EPL-27 |
| E22 | VEP001G2A | MENU FPC | EPL-13 | E22 | VEP001G2A | MENU FPC | EPL-27 |
| E23 | VEP26257B | MONITOR | EPL-13 | E23 | VEP26257B | MONITOR | EPL-27 |

# SERVICING FIXTURES & TOOLS

| Ref.No. | Part No. | Part Name & Description | Pcs | Remarks |
|---|---|---|---|---|
| 1 | VFM3010EDS | DV ALIGNMENT TAPE (COLOR BAR) | 1 | NTSC MODEL ONLY |
| 2 | VFM3110EDS | DV ALIGNMENT TAPE (COLOR BAR) | 1 | PAL MODEL ONLY |
| 3 | VFM3000EDS | DV ALIGNMENT TAPE (LINEARITY) | 1 | |
| 4 | VFK1217 | TAPE END/BEG DETECT CASSETTE | 1 | |
| 8 | VFK1308P | MEASURING BOARD | 1 | |
| 9 | VFK1309A | EVR CONNECTOR BOARD | 1 | |
| 10 | VFK1763 | CONNECTOR ADAPTER | 1 | |
| 11 | VJA0941 | DC CABLE | 2 | K2GY2DZ00003 |
| 12 | VFK1317 | 30PIN FLAT CABLE | 2 | |
| 13 | VFK1164TAR43 | 43MM ATTACHMENT RING] | 1 | |
| 14 | VFK1164TCM01 | COLLIMATOR SET | 1 | (INFINITY LENS) |
| 15 | VFK1345 | CC FILTER HOLDER | 1 | |
| 16 | VFK1346 | STEP DOWN RING | 1 | |
| 17 | VFK1659 | STEP-UP RING | 1 | (43MM-49MM) |
| 18 | VFK1660 | STEP-UP RING | 1 | (49MM-62MM) |
| 19 | VFK1341 | CC FILTER (LB40) | 1 | NTSC MODEL ONLY |
| 20 | VFK1342 | CC FILTER (LB80) | 1 | PAL MODEL ONLY |
| 21 | VFK1347 | CC FILTER (LB120) | 1 | |
| 22 | VFK1884 | CC FILTER (LBA2) | 1 | |
| 23 | VFK1888 | CC FILTER (LBB6) | 1 | |
| 24 | VFK1885 | CC FILTER (LBB2) | 1 | NTSC MODEL ONLY |
| 25 | VFK1886 | CC FILTER (CC C10) | 1 | PAL MODEL ONLY |
| 26 | VFK1887 | CC FILTER (CC C20) | 1 | PAL MODEL ONLY |
| 27 | VFK1409A | MEASURING BOARD | 1 | |
| 28 | VFK1899 | POST DRIVER | 1 | |
| 29 | VFK1810 | LISTA MEASURING BOARD | 1 | |
| 30 | VFK1186 | LISTA CABLE | 1 | |
| 31 | VFK1300 | A/D CONVERTER BOARD | 1 | |

| Ref.No. | Part No. | Part Name & Description | Pcs | Remarks |
|---|---|---|---|---|

# FRAME & CASING PARTS ASSEMBLY (1)

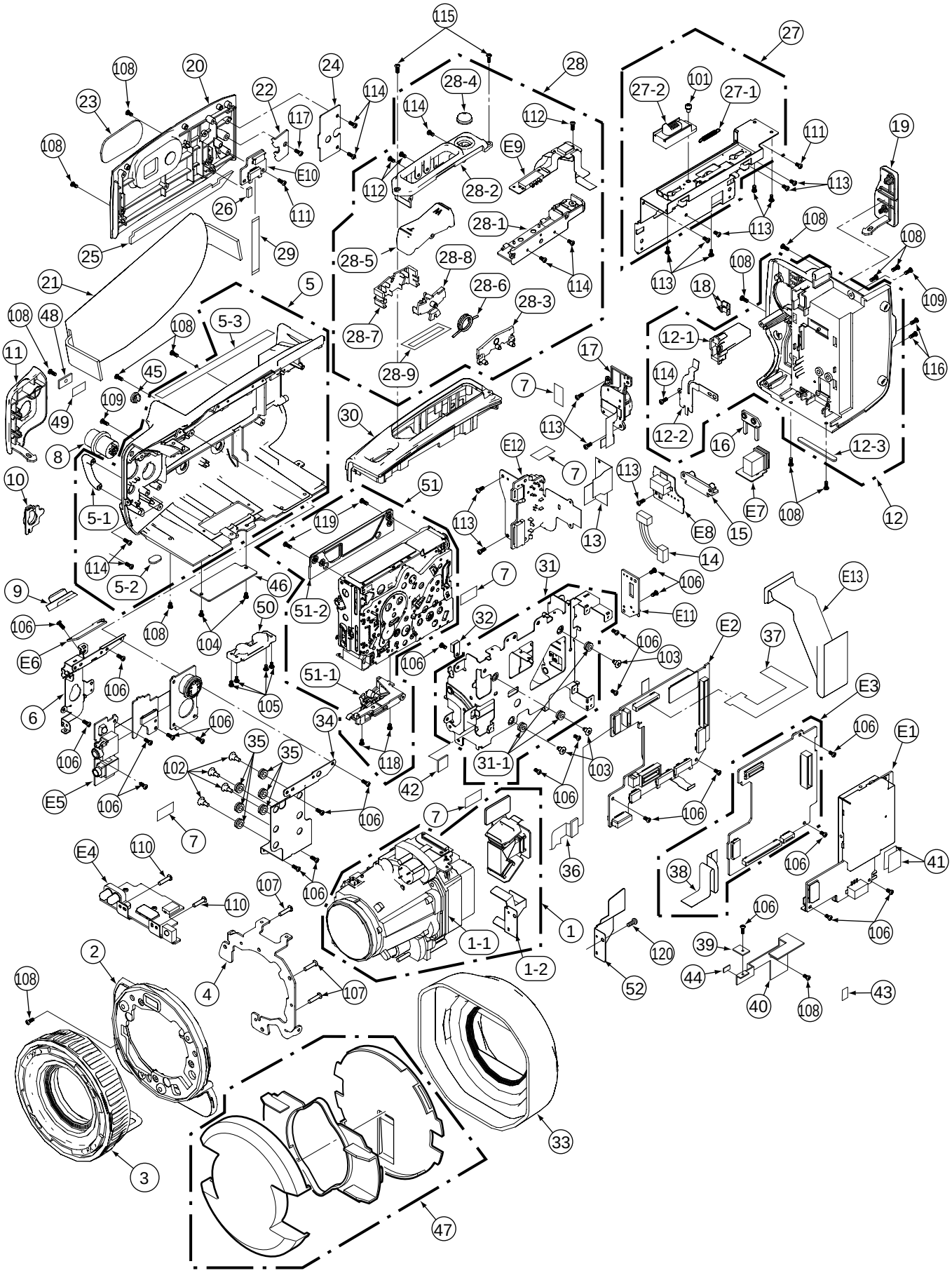

# FRAME & CASING PARTS ASSEMBLY (1)

| Ref.No. | Part No. | Part Name & Description | Pcs | Remarks |
|---|---|---|---|---|
| 1 | VXW0663/S | CAMERA LENS U | 1 | FOR AG-DVC30P |
| 1 | VXW0665/S | CAMERA LENS U | 1 | FOR AG-DVC30E/32EN/33MC |
| 1-1 | VXW0664 | LENS U | 1 | |
| 1-2 | VGQ7875 | HEAT SINK | 1 | |
| 2 | VYK1F22 | FRONT CASE 1 U | 1 | |
| 3 | VXP2362 | MF U | 1 | |
| 4 | VMP8012 | FRONT BASE | 1 | |
| 5 | VYK1F32 | SIDE CASE L 1 U | 1 | |
| 5-1 | VGQ6966 | GLIP BELT PIECE | 1 | |
| 5-2 | VKA0319 | GLIP DUSTPROOF RUBBER (F) | 1 | |
| 5-3 | VMT1609 | SIDE (L) GASKET | 1 | |
| 6 | VMP8002 | SIDE JACK FRAME | 1 | |
| 7 | VMZ3316 | MONITOR FPC PROTECT SHEET | 5 | |
| 8 | VEE0Z36 | MINI XLR HARNESS | 1 | |
| 9 | VGU9630 | S/S BUTTON | 1 | |
| 10 | VGQ7941 | MIC JACK COVER | 1 | |
| 11 | VJF1493 | SIDE JACK COVER | 1 | |
| 12 | VYK1F36 | REAR CASE 1 U | 1 | |
| 12-1 | VGU9617 | BATTERY LOCK BUTTON | 1 | |
| 12-2 | VMC1804 | BATTERY LOCK SPRING | 1 | |
| 12-3 | VKA0340 | GLIP DUSTPROOF RUBBER | 1 | |
| 13 | VWJ1715 | REAR FPC | 1 | |
| 14 | VEE0Z33 | BATTERY HARNESS | 1 | |
| 15 | K4ZZ04000032 | TERMINAL | 1 | |
| 16 | VMP7340 | DCIN ANGLE | 1 | |
| 17 | N9ZZ00000252 | S/S U | 1 | |
| 18 | VKW3222 | MODE PANEL LIGHT | 2 | |
| 19 | VJF1494 | REAR JACK COVER | 1 | |
| 20 | VGP6061 | CASETTE COVER (L) | 1 | |
| 21 | VFB0218 | HAND STRAP | 1 | |
| 22 | VMP8007 | GLIP BELT FIX ANGLE | 1 | |
| 23 | VGH4759 | CASSETTE COVER WINDOW | 1 | FOR AG-DVC30P |
| 23 | VGH4760 | CASSETTE COVER WINDOW | 1 | FOR AG-DVC30E/32EN/33MC |
| 24 | VGF0998 | BLIND PLATE | 1 | |
| 25 | VMT1574 | CASSETTE COVER GASKET | 1 | |
| 26 | VMT1610 | GYRO PCB CUSHION | 1 | |
| 27 | VXA7822 | CASSETE COVER ROCK U | 1 | |
| 27-1 | VMB3680 | EJECT LOCK BUTTON SPRING | 1 | |
| 27-2 | VGQ7943 | EJECT BUTTON | 1 | |
| 28 | VYQ3026 | ZOOM SW U | 1 | |
| 28-1 | VGQ7942 | ZOOM LEVER CASE (R) | 1 | |
| 28-2 | VGQ6904 | ZOON LEVER CASE (L) | 1 | |
| 28-3 | VGQ6928 | ZOOM SW HOLDER | 1 | |
| 28-4 | VGU9203 | REC CHECK RUBBER BUTTON | 1 | |
| 28-5 | VGU9215 | ZOOM LEVER | 1 | |
| 28-6 | VMB3663 | COIL SPRING ZOOM | 1 | |
| 28-7 | VGQ6996 | ZOOM HOLDER (R) | 1 | |
| 28-8 | VGQ6997 | ZOOM SPRING HOLDER PIECE | 1 | |
| 28-9 | VMZ3406 | ZOOM PCB BLIND SHEET | 1 | |
| 29 | VWJ1742 | ZOOM FFC | 1 | |
| 30 | VGP6060 | CASSETTE COVER (U) | 1 | |
| 31 | VXK1788 | MECHA ATTACH FRAME 1 U | 1 | |
| 31-1 | VMG1107 | MECH DUMPER RUBBER | 3 | |
| 32 | L2B000000001 | SENSOR UNIT | 1 | |
| 33 | VYF2982 | HOOD U | 1 | |
| 34 | VMP8001 | LENS FRAME | 1 | |
| 35 | VMG1463 | DUSTPROOF RUBBER | 6 | |
| 36 | VWJ1713 | SIDE JACK FPC | 1 | |
| 37 | VWJ1714 | EVF CN FPC | 1 | |
| 38 | VWJ16E5110L0 | FFC CABLE | 1 | |
| 39 | VSC5621 | CCD CON SHIELD | 1 | |
| 40 | VSC5622 | CCD CON STOPPER | 1 | |
| 41 | VGQ8091 | COOLING SHEET P | 2 | |
| 42 | VGQ8093 | COOLING SHEET M | 1 | |
| 43 | VGQ8094 | COOLING SHEET CR | 1 | |
| 44 | VMZ3465 | CD CON CUSHION | 1 | |
| 45 | VKF3415 | MECHA COVER (L) | 1 | |
| 46 | VGQ5988 | EVR COVER | 1 | |
| 47 | VYK0Z96 | LENS CAP U | 1 | |
| 48 | VGP6074 | MECHA COVER (R) | 1 | |
| 49 | VGF1009 | MECHA COVER SHEET | 1 | |
| 50 | VMD5058 | TRIPOD BASE | 1 | |
| 51 | VXY1843 | MECHA CHASSIS U | 1 | |
| 51-1 | VML3876 | CLEANING ROLLER U | 1 | |
| 51-2 | VGQ7971 | GARAGE COVER | 1 | |
| 52 | VMA0S43 | CONNECTION PLATE | 1 | |

| Ref.No. | Part No. | Part Name & Description | Pcs | Remarks |
|---|---|---|---|---|
| 101 | DXYN2+J4FNNT | SCREW | 1 | |
| 102 | VHD1132 | SCREW | 4 | |
| 103 | VHD1133 | SCREW | 3 | |
| 104 | VHD1451 | SCREW | 2 | |
| 105 | VHD1601 | SCREW | 4 | |
| 106 | XQN16+B3FN | SCREW | 25 | |
| 107 | XYN2+J8 | SCREW | 3 | |
| 108 | XQN16+B4FZ | SCREW | 14 | |
| 109 | XQN16+B5FZ | SCREW | 2 | |
| 110 | XQN16+BJ35FN | SCREW | 2 | |
| 111 | XQN16+BJ3FN | SCREW | 2 | |
| 112 | XQN16+BJ3FZ | SCREW | 3 | |
| 113 | XQN16+BJ4FN | SCREW | 13 | |
| 114 | XQN16+BJ4FZ | SCREW | 8 | |
| 115 | XQN16+BJ6FZ | SCREW | 2 | |
| 116 | XQN2+B4FZ | SCREW | 2 | |
| 117 | XTB26+6GFZ | SCREW | 1 | |
| 118 | XQN14+B25 | SCREW | 2 | |
| 119 | XQN16+B22FZ | SCREW | 2 | |
| 120 | XQN16+CJ4 | SCREW | 1 | |
| E1 | VEP01952A | POWER C.B.A. | 1 | |
| E2 | VEP03G60A | VTR C.B.A. | 1 | FOR AG-DVC30P |
| E2 | VEP03G60B | VTR C.B.A. | 1 | FOR AG-DVC30E/32EN/33MC |
| E3 | VEP23598A | CAMERA C.B.A. | 1 | FOR AG-DVC30P |
| E3 | VEP23598B | CAMERA C.B.A. | 1 | FOR AG-DVC30E/32EN/33MC |
| E4 | VEP06F67A | FRONT C.B.A. | 1 | |
| E5 | VEP04861A | SIDE JACK FLEX C.B.A. | 1 | |
| E6 | VEP001G1A | SUB REC C.B.A. | 1 | |
| E7 | VEP01957A | DC IN C.B.A. | 1 | |
| E8 | VEP01953A | BATTERY C.B.A. | 1 | |
| E9 | VEP06F66A | ZOOM FLEX C.B.A. | 1 | |
| E10 | VEP001E3A | ZOOM CON C.B.A. | 1 | |
| E11 | VEP001E5A | CAS OPEN C.B.A. | 1 | |
| E12 | VEP04863A | REAR JACK C.B.A. | 1 | |
| E13 | VEP001E8A | R-SIDE FLEX C.B.A. | 1 | |

# FRAME & CASING PARTS ASSEMBLY (2)

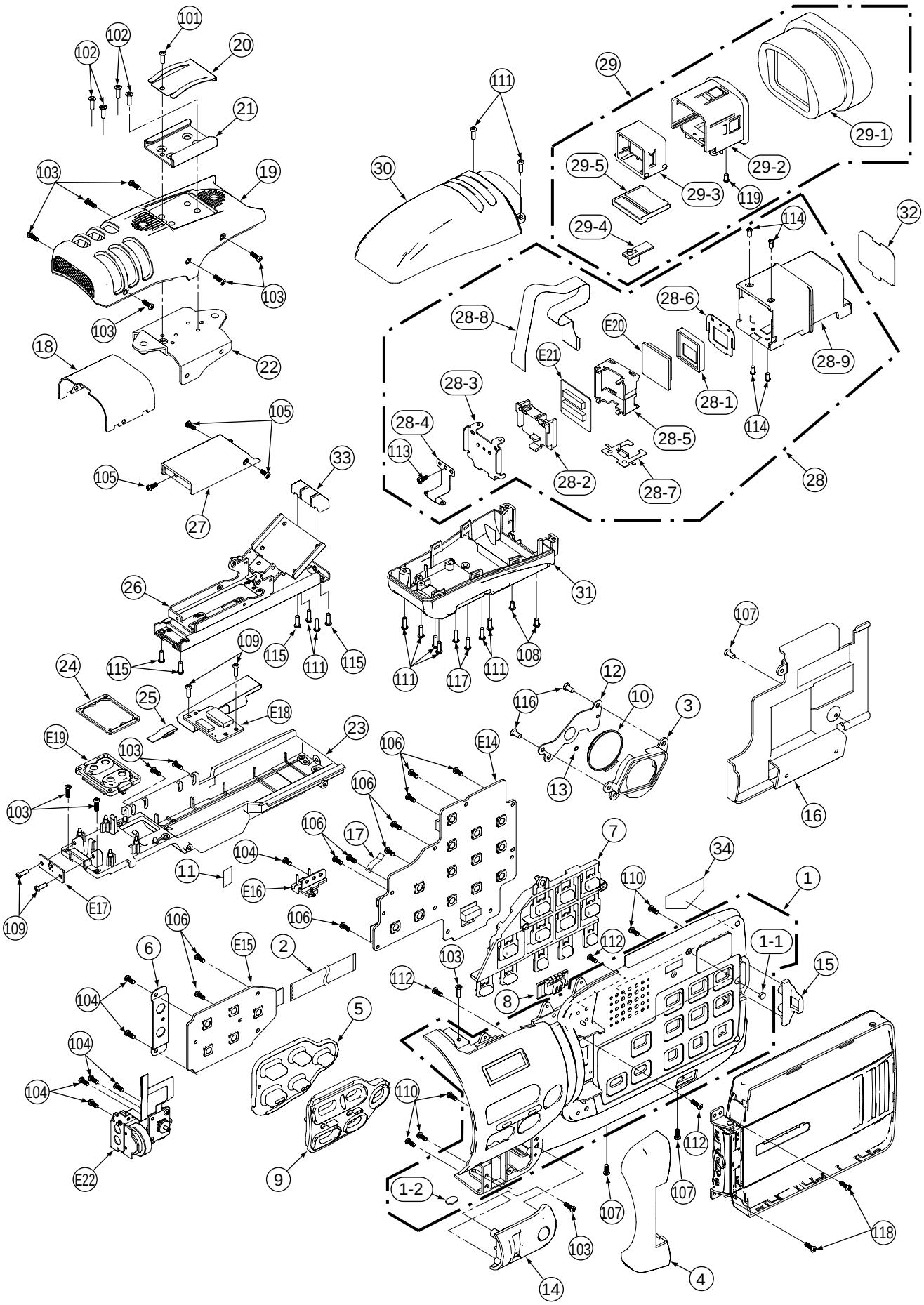

# FRAME & CASING PARTS ASSEMBLY (2)

| Ref.No. | Part No. | Part Name & Description | Pcs | Remarks |
|---|---|---|---|---|
| 1 | VYK1F30 | SIDE CASE R 1 U | 1 | |
| 1-1 | VMT1547 | LCD CUSHION | 1 | |
| 1-2 | VKA0319 | GLIP DUSTPROOF RUBBER (F) | 1 | |
| 2 | VWJ16E5080L0 | FLAT CABLE | 1 | |
| 3 | VGQ6897 | SPEAKER HOLDER | 1 | |
| 4 | VGP6064 | HINGE COVER | 1 | |
| 5 | VGU9618 | CAM BUTTON | 1 | |
| 6 | VMP8019 | CAMERA PCB FRAME | 1 | |
| 7 | VGU9619 | VTR BUTTON | 1 | |
| 8 | VGU9620 | A/M KNOB | 1 | |
| 9 | VGQ7939 | CAM BUTTON HOLDER | 1 | |
| 10 | VEK9842 | SPEAKER ASS'Y | 1 | |
| 11 | VMZ3316 | MONITOR FPC PROTECT SHEET | 1 | |
| 12 | VMP7330 | SPEAKER HOLDER ANGLE | 1 | |
| 13 | VMT1347 | SPEAKER HOLDER CUSHION | 1 | |
| 14 | VYP8947 | MENU PANEL U | 1 | |
| 15 | VGQ7940 | LCD LOCK BASE | 1 | |
| 16 | VSC5625 | HEAT SINK (SIDE R) | 1 | |
| 17 | VMC1936 | KNOB HOLD FRAME | 1 | |
| 18 | VYQ3027 | MIC NET U | 1 | |
| 19 | VYK1F42 | MIC CASE 1 U | 1 | |
| 20 | VMC1931 | SPRING | 1 | |
| 21 | VJF1504 | SHOE | 1 | |
| 22 | VMP8023 | SHOE HOLD ANGLE | 1 | |
| 23 | VYK1F34 | TOP CASE 1 U | 1 | |
| 24 | VGQ6352 | DUMPER HOLDER PIECE | 1 | |
| 25 | VWJ07E5030L0 | FFC CABLE | 1 | |
| 26 | VXA7804 | EVF SLIDE U | 1 | |
| 27 | VKF3890 | EVF SLIDE COVER | 1 | |
| 28 | VYQ3024 | EVF LCD HOLDER U | 1 | |
| 28-1 | L5BDDXE00001 | ACTIVE MATRIX LCD PANEL | 1 | |
| 28-2 | VGQ6927 | EVF COVER | 1 | |
| 28-3 | VMP7360 | EVF COVER ANGLE | 1 | |
| 28-4 | VMC1919 | EVF EARTH SPRING | 1 | |
| 28-5 | VMX2967 | PB SPACER | 1 | |
| 28-6 | VGQ7088 | LCD MASK | 1 | |
| 28-7 | VMC1612 | EVF EARTH SPRING | 1 | |
| 28-8 | VWJ1716 | EVF FPC | 1 | |
| 28-9 | VGQ7947 | EVF LCD CASE | 1 | |
| 29 | VYK8120 | EYE CAP HOLDER U | 1 | |
| 29-1 | VMG1100 | EYE CAP | 1 | |
| 29-2 | VGQ4586 | EYE CAP HOLDER | 1 | |
| 29-3 | VYQ1445 | LENS HOLDER | 1 | |
| 29-4 | VGU7612 | EYE SIGHT KNOB | 1 | |
| 29-5 | VGQ4588 | KNOB GUIDE | 1 | |
| 30 | VYK1F24 | EVF TOP CASE U | 1 | |
| 31 | VGP6063 | EVF CASE (UNDER) | 1 | |
| 32 | VGQ7948 | EVF LCD FILTER | 1 | |
| 33 | VGF1001 | TOP BLINDFOLD PIECE | 1 | |
| 34 | VGQ8092 | COOLING SHEET R | 1 | |
| 101 | DXSN2+4FCNT | SCREW | 1 | |
| 102 | DXSS2+5FZNT | SCREW | 4 | |
| 103 | XQN16+B5FZ | SCREW | 12 | |
| 104 | XQN16+B3FN | SCREW | 7 | |
| 105 | XQN16+B3FZ | SCREW | 3 | |
| 106 | XQN16+B4FN | SCREW | 10 | |
| 107 | XQN16+B4FZ | SCREW | 3 | |
| 108 | XQN16+BJ3FZ | SCREW | 2 | |
| 109 | XQN16+BJ4FN | SCREW | 4 | |
| 110 | XQN16+BJ4FZ | SCREW | 5 | |
| 111 | XQN16+BJ5FZ | SCREW | 10 | |
| 112 | XQN16+BJ6FZ | SCREW | 4 | |
| 113 | XQN16+C25FZ | SCREW | 1 | |
| 114 | XQN16+C3 | SCREW | 4 | |
| 115 | XQN2+A5FZ | SCREW | 4 | |
| 116 | XQN2+C5 | SCREW | 2 | |
| 117 | XQS16+AJ5FZ | SCREW | 2 | |
| 118 | XYN2+C5 | SCREW | 2 | |
| 119 | XQN16+BJ3FN | SCREW | 1 | |

| Ref.No. | Part No. | Part Name & Description | Pcs | Remarks |
|---|---|---|---|---|
| E14 | VEP06F68A | R-SIDE C.B.A. | 1 | |
| E15 | VEP06F64A | CAMERA OP C.B.A. | 1 | |
| E16 | VEP001E1A | LCD OPEN C.B.A. | 1 | |
| E17 | VEP001E4A | TALLY C.B.A. | 1 | |
| E18 | VEP001E0A | EVF CON C.B.A. | 1 | |
| E19 | VEP04828A | MIC C.B.A. | 1 | |
| E20 | VEP28272B | EVF A C.B.A. | 1 | |
| E21 | VEP28275B | EVF B C.B.A. | 1 | |
| E22 | VEP001G2A | MENU FLEX C.B.A. | 1 | |

# LCD PARTS ASSEMBLY

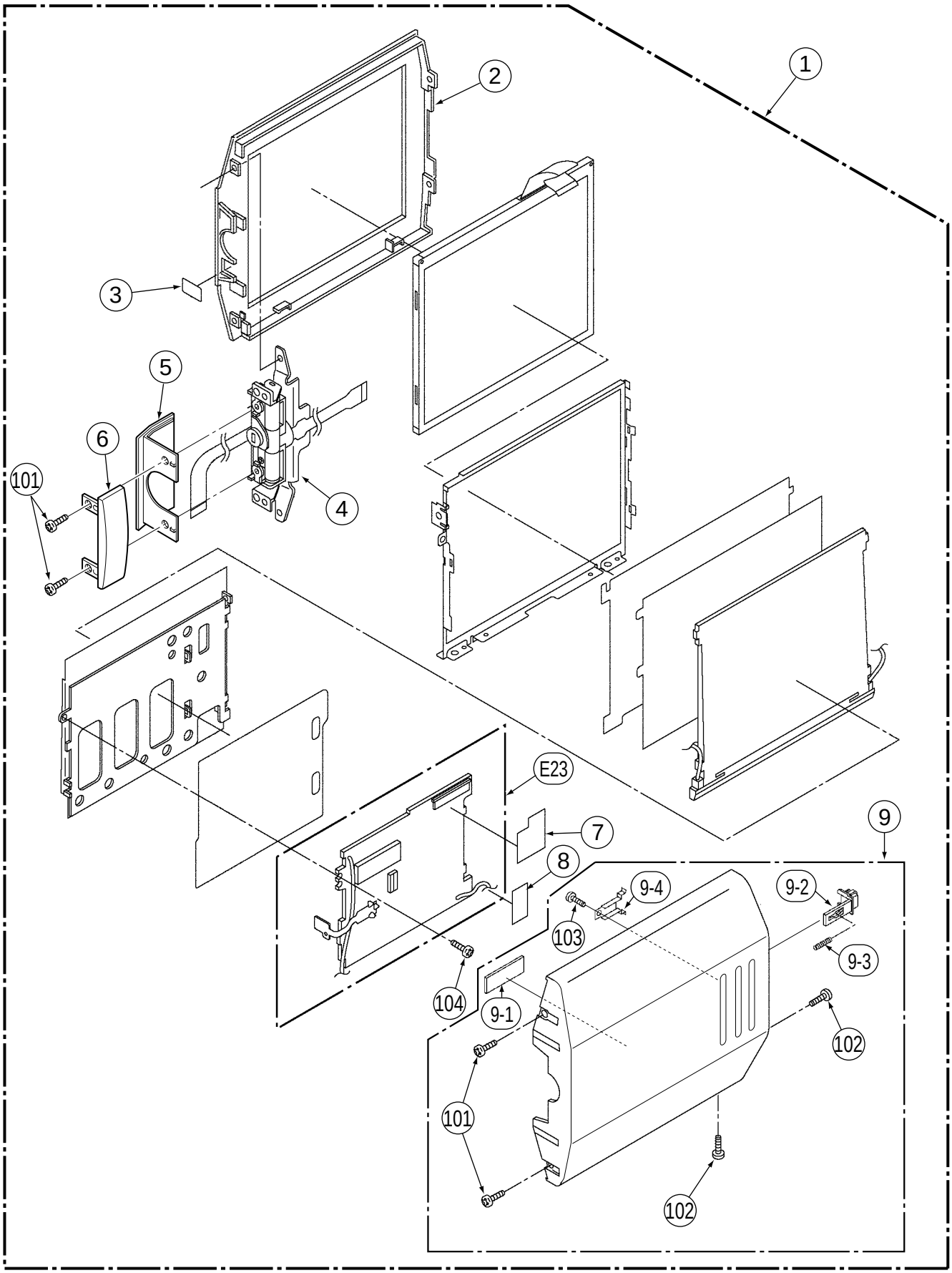

# LCD PARTS ASSEMBLY

| Ref.No. | Part No. | Part Name & Description | Pcs | Remarks |
|---|---|---|---|---|
| 1 | VYK1F09S | LCD U | 1 | FOR AG-DVC30P/E |
| 1 | VYK1J18 | LCD U | 1 | FOR AG-DVC32EN |
| 1 | VYK1F19S | LCD U | 1 | FOR AG-DVC33MC |
| 2 | VKM6484 | LCD CASE (BOTTOM) | 1 | |
| 3 | VGQ4758 | BLIND SHEET (A) | 1 | |
| 4 | VXD0424S | LCD HINGE U | 1 | |
| 5 | VGQ7950 | HINGE CASE (BOTTOM) | 1 | |
| 6 | VGQ7949 | HINGE CASE (TOP) | 1 | |
| 7 | VGQ6644 | BARRIER (LCD) | 1 | |
| 8 | VGQ6286 | LCD BARRIER | 1 | |
| 9 | VYK1F27S | LCD CASE (TOP) U | 1 | FOR AG-DVC30P/E |
| 9 | VYK1J19 | LCD CASE (TOP) U | 1 | FOR AG-DVC32EN |
| 9 | VYK1F28S | LCD CASE (TOP) U | 1 | FOR AG-DVC33MC |
| 9-1 | VGQ6290 | LCD CUSHION | 1 | |
| 9-2 | VGQ7951 | LCD LOCK PIECE | 1 | |
| 9-3 | VMB3217 | LCD LOCK SPRING | 1 | |
| 9-4 | VMP6292 | LOCK PIECE FIX ANGLE | 1 | |
| 101 | VHD1451 | SCREW | 4 | |
| 102 | XQN16+B25FN | SCREW | 2 | |
| 103 | XQS16+AJ3 | SCREW | 1 | |
| 104 | XQN16+B2FN | SCREW | 1 | |
| E23 | VEP26257B | MONITOR C.B.A. | 1 | |

# PACKING PARTS ASSEMBLY

Components identified with the mark ⚠ have the special characteristics for safety.
When replacing any of these components, use only the same type.

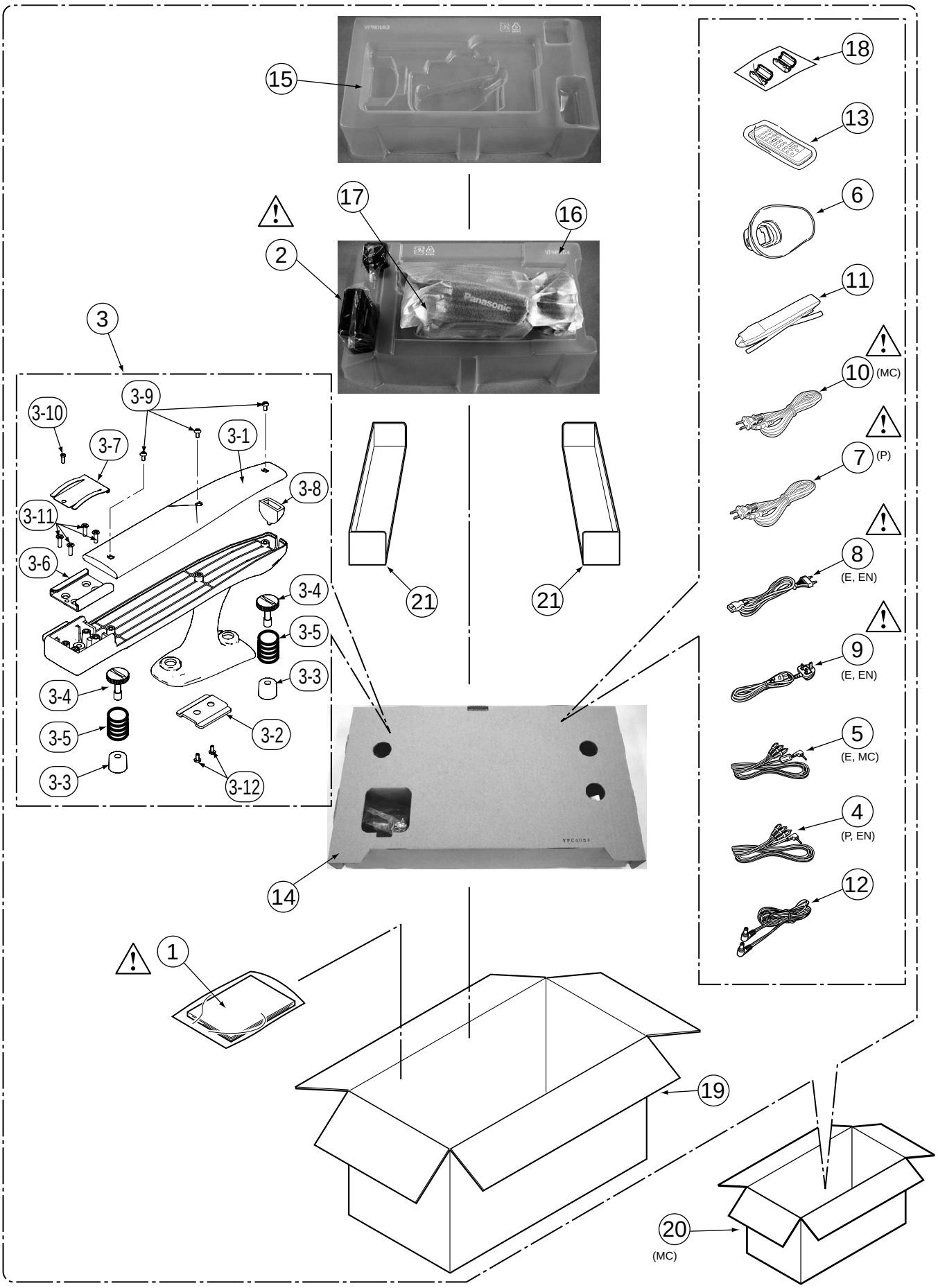

# PACKING PARTS ASSEMBLY

Components identified with the mark ⚠ have the special characterisitics for safety.
When replacing any of these components, use onlly the same type.

| Ref.No. | Part No. | Part Name & Description | Pcs | Remarks |
|---|---|---|---|---|
| ⚠ 1 | VQT0J25 | OPERATING INSTRUCTIONS | 1 | FOR AG-DVC30P |
| ⚠ 1 | VQT0J26 | OPERATING INSTRUCTIONS | 1 | FOR AG-DVC30E |
| ⚠ 1 | VQT0L09 | OPERATING INSTRUCTIONS | 1 | FOR AG-DVC32EN |
| ⚠ 1 | VQT0J27 | OPERATING INSTRUCTIONS | 1 | FOR AG-DVC33MC |
| ⚠ 2 | DE-852DB | AC ADAPTOR | 1 | FOR AG-DVC30P |
| ⚠ 2 | DE-811DB | AC ADAPTOR | 1 | FOR AG-DVC30E/32EN |
| ⚠ 2 | DE-811FB | AC ADAPTOR | 1 | FOR AG-DVC33MC |
| 3 | VYH0312 | HANDLE U | 1 | |
| 3-1 | VGQ7970 | HANDLE COVER | 1 | |
| 3-2 | VGM2084 | HANDLE SPACER | 1 | |
| 3-3 | VMG1627 | HANDLE HOLD RUBBER | 2 | |
| 3-4 | VHD1661 | HANDLE HOLD SCREW | 2 | |
| 3-5 | VMB3894 | HANDLE SCREW FLAT SPRING | 2 | |
| 3-6 | VJF1504 | SHOE | 1 | |
| 3-7 | VMC1931 | SPRING | 1 | |
| 3-8 | VMG1628 | HANDLE CUSHION RUBBER | 1 | |
| 3-9 | XQN2+A5FZ | SCREW | 3 | |
| 3-10 | DXSN2+4FCNT | SCREW | 1 | |
| 3-11 | DXSS2+4FZNT | SCREW | 4 | |
| 3-12 | DXSS3+6FZNT | SCREW | 2 | |
| 4 | K2KC4CB00009 | AV CABLE | 1 | FOR AG-DVC30P/32EN |
| 5 | VYC0922 | AV CABLE | 1 | FOR AG-DVC30E/33MC |
| 6 | VMG1370 | EYE CAP | 1 | |
| ⚠ 7 | K2CB2CB00006 | POWER CORD | 1 | FOR AG-DVC30P |
| ⚠ 8 | K2CR2DA00005 | POWER CORD | 1 | FOR AG-DVC30E/32EN |
| ⚠ 9 | K2CT3DA00001 | POWER CORD | 1 | FOR AG-DVC30E/32EN |
| ⚠ 10 | K2CA2DA00030 | POWER CORD | 1 | FOR AG-DVC33MC |
| 11 | VFC3891 | SHOULDER BELT | 1 | |
| 12 | K2GJ2DC00002 | DC CORD | 1 | |
| 13 | VFA0402 | WIRELESS REMOTE CONTROL | 1 | |
| 14 | VPG0Y21 | ACCESSORY BOX | 1 | |
| 15 | VPN6164 | CUSHION (B) | 1 | |
| 16 | VPN6163 | CUSHION (T) | 1 | |
| 17 | VPF1218 | PROTECTION BAG | 1 | |
| 18 | J0KG00000013 | CORE | 2 | FOR AG-DVC30E/32EN/33MC |
| 19 | VPG0Y08 | PACKING CASE (P) B | 1 | FOR AG-DVC30P |
| 19 | VPG0Y09 | PACKING CASE (P) B | 1 | FOR AG-DVC30E |
| 19 | VPG0Z57 | PACKING CASE (P) B | 1 | FOR AG-DVC32EN |
| 19 | VPG0Y11 | PACKING CASE (P) B (IN) | 1 | FOR AG-DVC33MC |
| 20 | VPG0Y10 | PACKING CASE (OUT) | 1 | FOR AG-DVC33MC |
| 21 | VPN6237 | PARTITION PLATE | 2 | |

# CABINET PARTS ASSEMBLY (AG-MYA30G)

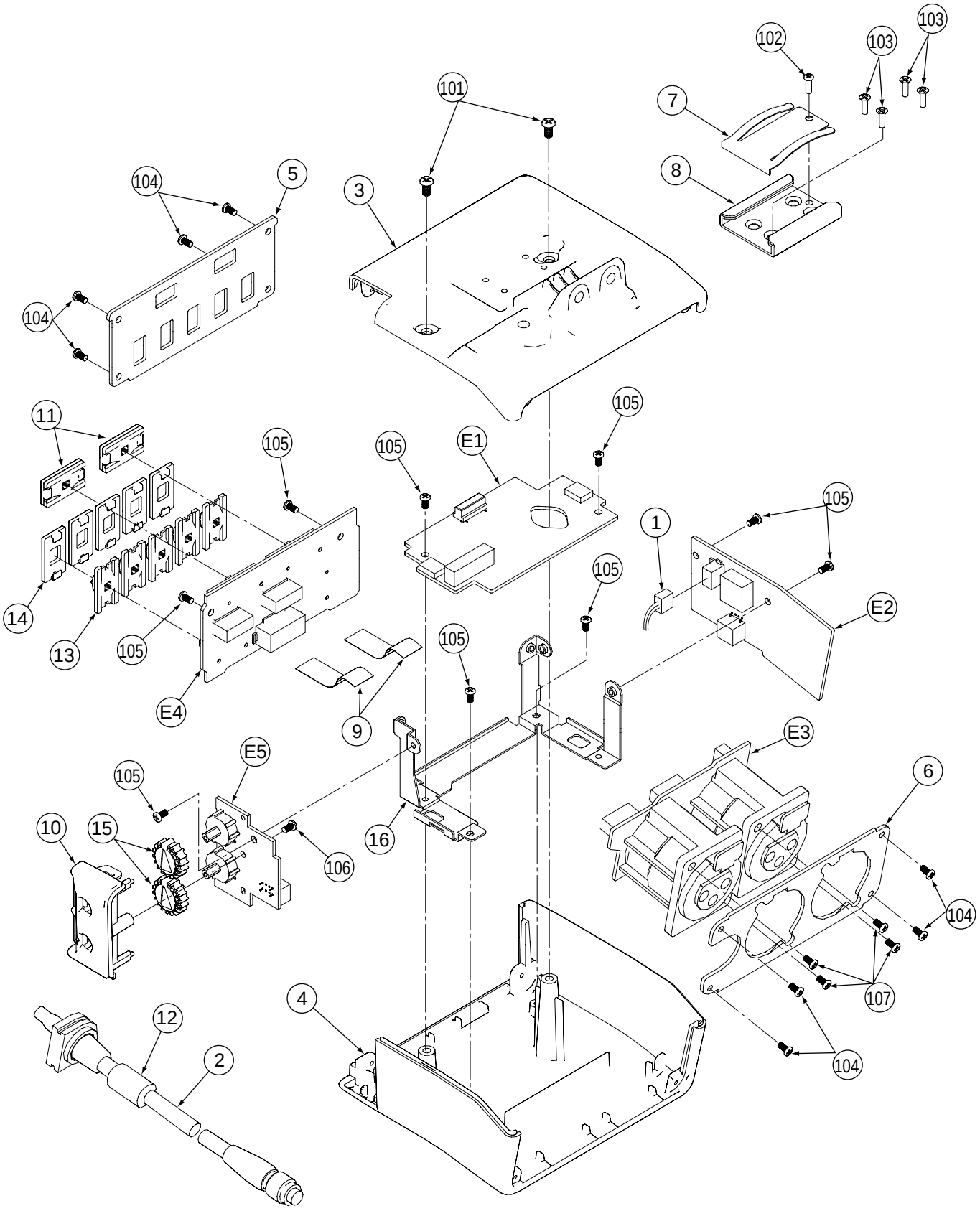

# CABINET PARTS ASSEMBLY (AG-MYA30G)

| Ref.No. | Part No. | Part Name & Description | Pcs | Remarks |
|---|---|---|---|---|
| 1 | VEE0Z45 | POWER CABLE | 1 | |
| 2 | VEC0993 | MINI XLR CABLE | 1 | |
| 3 | VGM2081 | XLR BOX TOP-CASE | 1 | |
| 4 | VGM2082 | XLR BOX BOTTOM CASE | 1 | |
| 5 | VMP8010 | SLIDE SW NAME PLATE | 1 | |
| 6 | VMP8011 | XLR NAME PLATE | 1 | |
| 7 | VMC1931 | SPRING | 1 | |
| 8 | VJF1504 | SHOE | 1 | |
| 9 | VWJ13E5045L0 | FLEXIBLE CABLE | 2 | |
| 10 | VGQ8088 | VR COVER | 1 | |
| 11 | VYQ3166 | SLIDE TSUMAMI (L)U | 2 | |
| 12 | J0KG00000046 | FERRITE CORE | 1 | |
| 13 | VGU9214 | SLIDE KNOB | 5 | |
| 14 | VMG1460 | SLIDE SW RUBBER COVER | 5 | |
| 15 | VGU9641 | AUDIO VR KNOB | 2 | |
| 16 | VMP8039 | BOX PCB ANGLE | 1 | |
| 101 | XQN26+A5FZ | SCREW | 2 | |
| 102 | XQN2+C2FN | SCREW | 1 | |
| 103 | XSS2+4FZ | SCREW | 4 | |
| 104 | XQN16+B3FZ | SCREW | 8 | |
| 105 | XQN16+B25FN | SCREW | 9 | |
| 106 | XQN16+BJ4FN | SCREW | 1 | |
| 107 | XYN26+A6FZ | SCREW | 4 | |
| E1 | VEP04875A | MAIN C.B.A. | 1 | |
| E2 | VEP01956A | POWER C.B.A. | 1 | |
| E3 | VEP04869A | XLR C.B.A. | 1 | |
| E4 | VEP04870A | SW C.B.A. | 1 | |
| E5 | VEP04871A | VR C.B.A. | 1 | |

# PACKING PARTS ASSEMBLY (AG-MYA30G)

Components identified with the mark ⚠ have the special characteristics for safety.
When replacing any of these components, use only the same type.

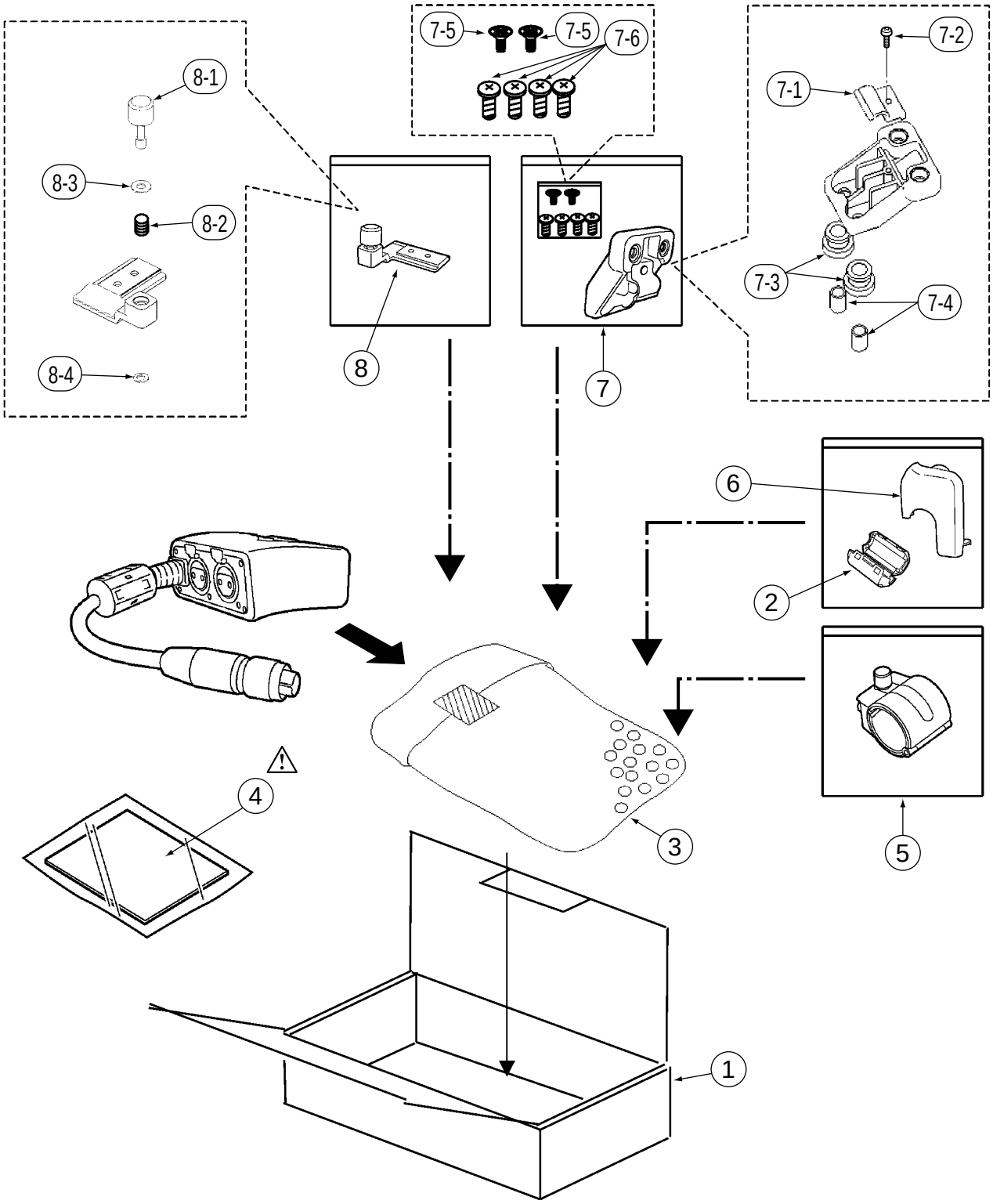

# PACKING PARTS ASSEMBLY (AG-MYA30G)

Components identified with the mark ⚠ have the special characterisitics for safety. When replacing any of these components, use onlly the same type.

| Ref.No. | Part No. | Part Name & Description | Pcs | Remarks |
|---|---|---|---|---|
| 1 | VPG0Z18 | PACING CASE | 1 | |
| 2 | J0KG00000046 | FERRITE CORE | 1 | |
| 3 | VPF1219 | CUSHION BAG | 1 | |
| ⚠ 4 | VQT0K50 | OPERATING INSTRUCTIONS | 1 | |
| 5 | VYC0870 | MIC HOLDER U | 1 | |
| 6 | VJF1497 | SIDE JACK COVER(XLR) | 1 | |
| 7 | VYC0920 | MIC ADAPTOR U | 1 | |
| 7-1 | VJF0804 | CABLE CLAMPER | 1 | |
| 7-2 | XQN2+CJ6FZ | SCREW | 1 | |
| 7-3 | VMG1189 | RUBBER BUSH | 2 | |
| 7-4 | VMX2835 | SPACER | 2 | |
| 7-5 | XSS3+6FZ | SCREW | 2 | |
| 7-6 | XSB4+12FXKS | SCREW | 4 | |
| 8 | VYQ3157 | BOX HOLD ANGLE U | 1 | |
| 8-1 | VHD1669 | BOX HOLD SCREW | 1 | |
| 8-2 | VMB3900 | BOX SCREW SPRING | 1 | |
| 8-3 | VMX3416 | HOLD ANGLE WASSYA UPEER | 1 | |
| 8-4 | VMX3417 | HOLD ANGLE WASSYA LOWER | 1 | |

Components identified with the mark ⚠ have special characteristics for safety.
When replacing any of these component, use only the same type.

# ELECTRICAL REPLACEMENT PARTS LIST
## AG-DVC30P

| Ref.No. | Part No. | Part Name & Description | Pcs | Remarks |
|---|---|---|---|---|
| ■ E1 | VEP01952A | POWER C.B.A. | 1 | (RTL) |
| ■ | VEP001G8A | GYRO SUB C.B.A. | 1 | (RTL)FOR VEP01952A |
| ■ E2 | VEP03G60A | VTR C.B.A. | 1 | (RTL) |
| ■ E3 | VEP23598A | CAMERA C.B.A. | 1 | (RTL) |
| ■ E4 | VEP06F67A | FRONT C.B.A. | 1 | (RTL) |
| ■ E5 | VEP04861A | SIDE JACK FPC C.B.A. | 1 | (RTL) |
| ■ E6 | VEP001G1A | SUB REC C.B.A. | 1 | (RTL) |
| ■ E7 | VEP01957A | DC IN C.B.A. | 1 | (RTL) |
| ■ E8 | VEP01953A | BATTERY C.B.A. | 1 | (RTL) |
| ■ E9 | VEP06F66A | ZOOM FPC C.B.A. | 1 | (RTL) |
| ■ E10 | VEP001E3A | ZOOM CON C.B.A. | 1 | (RTL) |
| ■ E11 | VEP001E5A | CAS OPEN C.B.A. | 1 | (RTL) |
| ■ E12 | VEP04863A | REAR JACK C.B.A. | 1 | (RTL) |
| ■ E13 | VEP001E8A | R-SIDE FPC C.B.A. | 1 | (RTL) |
| ■ E14 | VEP06F68A | R-SIDE C.B.A. | 1 | (RTL) |
| ■ E15 | VEP06F64A | CAMERA OP C.B.A. | 1 | (RTL) |
| ■ E16 | VEP001E1A | LCD OPEN C.B.A. | 1 | (RTL) |
| ■ E17 | VEP001E4A | TALLY C.B.A. | 1 | (RTL) |
| ■ E18 | VEP001E0A | EVF CON C.B.A. | 1 | (RTL) |
| ■ E19 | VEP04828A | MIC U C.B.A. | 1 | (RTL) |
| ■ E20 | VEP28272B | EVF A C.B.A. | 1 | (RTL) |
| ■ E21 | VEP28275B | EVF B C.B.A. | 1 | (RTL) |
| ■ E22 | VEP001G2A | MENU FPC C.B.A. | 1 | (RTL) |
| ■ E23 | VEP26257B | MONITOR C.B.A. | 1 | (RTL) |
| ■ | VEP06E80A | HALL SENSOR FLEX C.B.A. | 1 | (RTL)FOR VEP26257B |

| Ref.No. | Part No. | Part Name & Description | Pcs | Remarks |
|---|---|---|---|---|
| ■ E1 | VEP01952A | POWER C.B.A. | 1 | (RTL) |
| ■ | VEP001G8A | GYRO SUB C.B.A. | 1 | (RTL)FOR VEP01952A |
| C1001,02 | ECJ2FB1A475K | C.CAPACITOR CH 10V 4.7U | 2 | |
| C1004 | F1H1H104A783 | C.CAPACITOR CH 50V 0.1U | 1 | |
| C1005,06 | ECJ2FB1A475K | C.CAPACITOR CH 10V 4.7U | 2 | |
| C1007-09 | ECJ0EB1A104K | C.CAPACITOR CH 10V 0.1U | 3 | |
| C1011 | ECJ2YB1A105K | C.CAPACITOR CH 10V 1U | 1 | |
| C1012 | F1J0J106A014 | T.CAPACITOR CH6.3V 10U | 1 | |
| C1021 | ECJ2YB1A105K | C.CAPACITOR CH 10V 1U | 1 | |
| C1022 | F1J0J106A014 | T.CAPACITOR CH6.3V 10U | 1 | |
| C1041 | ECJ2YB1A105K | C.CAPACITOR CH 10V 1U | 1 | |
| C1042 | F1J0J106A014 | T.CAPACITOR CH6.3V 10U | 1 | |
| C1051 | ECJ2YB1A105K | C.CAPACITOR CH 10V 1U | 1 | |
| C1052 | F1L1E1060018 | C.CAPACITOR CH 25V 10U | 1 | |
| C1053-55 | F1G1H2210001 | C.CAPACITOR CH 50V 220P | 3 | |
| C1057 | F1G1H2210001 | C.CAPACITOR CH 50V 220P | 1 | |
| C1058 | ECJ2FB1E105K | C.CAPACITOR CH 25V 1U | 1 | |
| C1061,62 | F1J1A335A003 | C.CAPACITOR CH 10V 3.3U | 2 | |
| C1063,64 | ECJ0EB1A104K | C.CAPACITOR CH 10V 0.1U | 2 | |
| C1071,72 | ECJ1VB1C105K | C.CAPACITOR CH 16V 1U | 2 | |
| C1101 | ECJ0EB1A104K | C.CAPACITOR CH 10V 0.1U | 1 | |
| C1102 | ECJ0EC1H151J | C.CAPACITOR CH 50V 150P | 1 | |
| C1103 | ECJ0EB1A683K | C.CAPACITOR CH 10V 0.068U | 1 | |
| C1106 | ECJ1VB0J105K | C.CAPACITOR CH 35V 1M | 1 | |
| C1112 | ECJ0EB1A473K | C.CAPACITOR CH 10V 0.047U | 1 | |
| C1113 | F1G1C333A004 | C.CAPACITOR CH 16V 0.033U | 1 | |
| C1115 | ECJ0EB1E471K | C.CAPACITOR CH 25V 470P | 1 | |
| C1123 | ECJ0EB1A473K | C.CAPACITOR CH 10V 0.047U | 1 | |
| C1126 | ECJ0EB1E331K | C.CAPACITOR CH 25V 330P | 1 | |
| C1142 | ECJ0EB1A104K | C.CAPACITOR CH 10V 0.1U | 1 | |
| C1145 | ECJ0EB1E222K | C.CAPACITOR CH 25V 2200P | 1 | |
| C1146 | ECJ0EB1E331K | C.CAPACITOR CH 25V 330P | 1 | |
| C1151 | ECJ1ZB1H103K | C.CAPACITOR CH 50V 0.01U | 1 | |
| C1152 | ECUX1E473KBV | C.CAPACITOR CH 25V 0.047U | 1 | |
| C1154 | ECJ0WB1C103K | C.CAPACITOR CH 16V 0.01U | 1 | |
| C1157 | ECJ0WB1C103K | C.CAPACITOR CH 16V 0.01U | 1 | |
| C1211,12 | F1H1A105A028 | C.CAPACITOR CH 10V 1U | 2 | |
| C1221-24 | F1H1A105A028 | C.CAPACITOR CH 10V 1U | 4 | |
| C1226,27 | F1H1A105A028 | C.CAPACITOR CH 10V 1U | 2 | |
| C1228 | F3F1A1060001 | T.CAPACITOR CH 10V 10U | 1 | |
| C1241 | F1H1A105A028 | C.CAPACITOR CH 10V 1U | 1 | |
| C1249 | F3E0J106A005 | T.CAPACITOR CH6.3V 10U | 1 | |
| C1251,52 | ECJ2FB1E105K | C.CAPACITOR CH 25V 1U | 2 | |
| C1253 | F1H1E154A050 | C.CAPACITOR CH 25V 0.15U | 1 | |
| C1271 | ECJ1VB1C105K | C.CAPACITOR CH 16V 1U | 1 | |
| C1273 | ECJ1VB1C105K | C.CAPACITOR CH 16V 1U | 1 | |
| C1322,23 | F1H1A105A028 | C.CAPACITOR CH 10V 1U | 2 | |
| C1328 | F1J0J475A008 | C.CAPACITOR CH6.3V 4.7U | 1 | |
| C1341 | F1H1A105A028 | C.CAPACITOR CH 10V 1U | 1 | |
| C1342 | F3E0J106A005 | T.CAPACITOR CH6.3V 10U | 1 | |
| C1343 | F1H1A105A028 | C.CAPACITOR CH 10V 1U | 1 | |
| C1344 | F3E0J106A005 | T.CAPACITOR CH6.3V 10U | 1 | |
| C1503 | ECJ0WB1C103K | C.CAPACITOR CH 16V 0.01U | 1 | |
| C1603 | ECJ0WB1C103K | C.CAPACITOR CH 16V 0.01U | 1 | |
| C1604 | ECJ0EB1A104K | C.CAPACITOR CH 10V 0.1U | 1 | |
| C1605 | ECJ0EC1H101J | C.CAPACITOR CH 50V 100P | 1 | |
| C1606 | ECJ0EB1A683K | C.CAPACITOR CH 10V 0.068U | 1 | |
| C1608 | F1H1H104A783 | C.CAPACITOR CH 50V 0.1U | 1 | |
| C1610 | ECJ0EC1H390J | C.CAPACITOR CH 50V 39P | 1 | |
| C1615 | ECJ0EB1A104K | C.CAPACITOR CH 10V 0.1U | 1 | |
| C1616 | ECJ0WB1C103K | C.CAPACITOR CH 16V 0.01U | 1 | |
| C1619 | ECJ0EB1E222K | C.CAPACITOR CH 25V 2200P | 1 | |
| C1620 | ECJ0EB1E331K | C.CAPACITOR CH 25V 330P | 1 | |
| C1621 | ECJ2FB1A475K | C.CAPACITOR CH 10V 4.7U | 1 | |
| C1622 | ECJ2YB1A105K | C.CAPACITOR CH 10V 1U | 1 | |
| C1623 | F1J0J106A014 | T.CAPACITOR CH6.3V 10U | 1 | |
| C1627,28 | ECJ1VB0J105K | C.CAPACITOR CH 35V 1M | 2 | |
| C1635 | ECJ2YB1A105K | C.CAPACITOR CH 10V 1U | 1 | |
| C1636 | F1J0J106A014 | T.CAPACITOR CH6.3V 10U | 1 | |
| C1901 | F3F1A226A001 | T.CAPACITOR CH 10V 22U | 1 | |
| C1902 | ECST0JY226 | T.CAPACITOR CH6.3V 22U | 1 | |
| C1911,12 | F1J0J106A014 | T.CAPACITOR CH6.3V 10U | 2 | |

Components identified with the mark ⚠ have special characteristics for safety.
When replacing any of these component, use only the same type.

| Ref.No. | Part No. | Part Name & Description | Pcs | Remarks |
|---|---|---|---|---|
| C1925 | ECJ0EB1E471K | C.CAPACITOR CH 25V 470P | 1 | |
| C1927 | ECUX1A105KBV | C.CAPACITOR CH 10V 1U | 1 | |
| C1929 | ECJ0EB1E471K | C.CAPACITOR CH 25V 470P | 1 | |
| C1930 | ECJ0EB1A104K | C.CAPACITOR CH 10V 0.1U | 1 | |
| C1931 | F3G1C2260001 | T.CAPACITOR CH 16V 22U | 1 | |
| | | | | |
| D1003 | NSD03A20 | DIODE | 1 | |
| D1005 | MA8130-M | DIODE | 1 | |
| D1011 | B0JCMC000004 | DIODE | 1 | |
| D1021 | B0JCMC000004 | DIODE | 1 | |
| D1041 | B0JCMC000004 | DIODE | 1 | |
| D1051 | MA2YD1700L | DIODE | 1 | |
| D1052 | MA2Z00100L | DIODE | 1 | |
| D1071 | MA111 | DIODE | 1 | |
| D1072 | MA2Z00100L | DIODE | 1 | |
| D1101 | MA8100-M | DIODE | 1 | |
| D1102 | MA2S11100L | DIODE | 1 | |
| D1131 | MA2S11100L | DIODE | 1 | |
| D1251 | MAZ81800HL | DIODE | 1 | |
| D1252 | MA2S11100L | DIODE | 1 | |
| D1528 | MA2S11100L | DIODE | 1 | |
| D1602 | B0JCMC000004 | DIODE | 1 | |
| D1608 | B0JCMC000004 | DIODE | 1 | |
| D1610 | MA2S11100L | DIODE | 1 | |
| D1681 | B0ADDJ000011 | DIODE | 1 | |
| D1682 | MA2S11100L | DIODE | 1 | |
| D1683 | MAZ80620HL | DIODE | 1 | |
| D1684 | MA3S132E0L | DIODE | 1 | |
| D1685 | B0BC4R200013 | DIODE | 1 | |
| | | | | |
| IC1001 | C0DBAZZ00064 | IC | 1 | |
| IC1321 | C0CBCAC00061 | IC | 1 | |
| IC1601 | C0DBAZZ00064 | IC | 1 | |
| IC1901 | L2ES00000010 | SENSOR UNIT | 1 | FOR VEP001G8A |
| IC1922 | C0ABBA000077 | IC | 1 | |
| IC1923 | C0JBAS000063 | IC | 1 | |
| | | | | |
| ⚠ IP1001 | K5H3122A0022 | FUSE | 1 | |
| ⚠ IP1003 | K5H8011A0004 | FUSE | 1 | |
| | | | | |
| L1001 | G1C3R9MA0024 | COIL 3.9UH | 1 | |
| L1005 | J0JHC0000018 | FILTER | 1 | |
| L1006 | J0MAB0000060 | FILTER | 1 | |
| L1011 | G1C330MA0011 | COIL 33UH | 1 | |
| L1021 | G1C220MA0011 | COIL 22UH | 1 | |
| L1041 | G1C330MA0011 | COIL 33UH | 1 | |
| L1061 | G1C330MA0085 | COIL 33UH | 1 | |
| L1062 | G1C181MA0024 | COIL 180UH | 1 | |
| L1111 | J0JAC0000011 | FILTER | 1 | |
| L1121 | J0JAC0000011 | FILTER | 1 | |
| L1141 | J0JAC0000011 | FILTER | 1 | |
| L1151 | J0JAC0000011 | FILTER | 1 | |
| L1211,12 | G1C4R7MA0072 | COIL 4.7UH | 2 | |
| L1221 | G1C4R7MA0072 | COIL 4.7UH | 1 | |
| L1222 | G1C4R7MA0073 | COIL 4.7UH | 1 | |
| L1223,24 | G1C4R7MA0076 | COIL 4.7UH | 2 | |
| L1226,27 | G1C4R7MA0073 | COIL 4.7UH | 2 | |
| L1241 | G1C4R7MA0072 | COIL 4.7UH | 1 | |
| L1251-53 | G1C100KA0055 | COIL 10UH | 3 | |
| L1271,72 | G1C100KA0055 | COIL 10UH | 2 | |
| L1321,22 | G1C4R7MA0076 | COIL 4.7UH | 2 | |
| L1341,42 | G1C4R7MA0073 | COIL 4.7UH | 2 | |
| L1602 | G1C331M00006 | COIL 330UH | 1 | |
| L1604,05 | G1C4R7MA0076 | COIL 4.7UH | 2 | |
| L1609 | A921CY-470M | FILTER | 1 | |
| L1610 | J0JAC0000011 | FILTER | 1 | |
| L1612 | J0JAC0000011 | FILTER | 1 | |
| L1901 | G1C100K00019 | COIL 10UH | 1 | |
| L1922,23 | G1C100K00019 | COIL 10UH | 2 | |
| | | | | |
| P1001 | K1KA03A00462 | CONNECTOR (MALE) | 1 | |
| P1011 | K1KA80A00037 | CONNECTOR | 1 | |
| | | | | |
| Q1003 | B2ABGP000001 | THYRISTOR | 1 | |
| Q1011 | B1DHCC000035 | TRANSISTOR | 1 | |
| | | | | |
| | | | | |

| Ref.No. | Part No. | Part Name & Description | Pcs | Remarks |
|---|---|---|---|---|
| Q1021 | B1DHCC000035 | TRANSISTOR | 1 | |
| Q1022 | B1DFCD000012 | TRANSISTOR | 1 | |
| Q1041 | B1DHCC000035 | TRANSISTOR | 1 | |
| Q1042 | B1DFCD000012 | TRANSISTOR | 1 | |
| Q1051 | B1DFCG000011 | TRANSISTOR | 1 | |
| Q1061,62 | FP102 | TRANSISTOR | 2 | |
| Q1601,02 | B1DHCC000035 | TRANSISTOR | 2 | |
| Q1611 | B1DHCC000035 | TRANSISTOR | 1 | |
| Q1612 | B1DFCD000012 | TRANSISTOR | 1 | |
| | | | | |
| QR1001 | UNR9113J0L | TRANSISTOR | 1 | |
| QR1101 | UNR9214J0L | TRANSISTOR | 1 | |
| QR1102 | UNR911DJ0L | TRANSISTOR | 1 | |
| QR1601 | UNR9113J0L | TRANSISTOR | 1 | |
| QR1602,03 | UN9213 | TRANSISTOR-RESISTOR | 2 | |
| QR1681 | UN9115 | TRANSISTOR-RESISTOR | 1 | |
| | | | | |
| R1002 | ERJ6GEY0R00 | M.RESISTOR CH 1/10W 0 | 1 | D0YDR0000005 |
| R1005 | ERJ2GEJ471 | M.RESISTOR CH 1/16W 470 | 1 | |
| R1006 | ERJ2GEJ103 | M.RESISTOR CH 1/16W 10K | 1 | |
| R1017 | ERJ3GEY0R00 | M.RESISTOR CH 1/16W 0 | 1 | |
| R1047 | ERJ3GEY0R00 | M.RESISTOR CH 1/16W 0 | 1 | |
| R1052,53 | ERJ6GEYG271 | M.RESISTOR CH 1/10W 270 | 2 | |
| R1056,57 | ERJ6GEYG220 | M.RESISTOR CH 1/10W 22 | 2 | D0GD220JA003 |
| R1058 | ERJ3GEY0R00 | M.RESISTOR CH 1/16W 0 | 1 | |
| R1101 | ERJ3RBD103 | M.RESISTOR CH 1/16W 10K | 1 | |
| R1105 | ERJ2GEJ103 | M.RESISTOR CH 1/16W 10K | 1 | |
| R1106 | ERJ2GE0R00 | M.RESISTOR CH 1/16W 0 | 1 | |
| R1107 | ERJ6GEY0R00 | M.RESISTOR CH 1/10W 0 | 1 | D0YDR0000005 |
| R1108,09 | ERJ2RHD272 | M.RESISTOR CH 1/16W 2.7K | 2 | |
| R1111 | ERJ2RHD272 | M.RESISTOR CH 1/16W 2.7K | 1 | |
| R1115 | ERJ2RHD822 | M.RESISTOR CH 1/16W 8.2K | 1 | |
| R1116 | ERJ2RHD272 | M.RESISTOR CH 1/16W 2.7K | 1 | |
| R1117 | ERJ2RKD680 | M.RESISTOR CH 1/16W 68 | 1 | |
| R1119 | ERJ2GE0R00 | M.RESISTOR CH 1/16W 0 | 1 | |
| R1121 | ERJ2GEJ152 | M.RESISTOR CH 1/16W 1.5K | 1 | |
| R1125 | ERJ2RHD392 | M.RESISTOR CH 1/16W 3.9K | 1 | |
| R1126 | ERJ2RHD272 | M.RESISTOR CH 1/16W 2.7K | 1 | |
| R1127 | ERJ2RHD151 | M.RESISTOR CH 1/16W 150 | 1 | |
| R1128,29 | ERJ2GE0R00 | M.RESISTOR CH 1/16W 0 | 2 | |
| R1141 | ERJ2GEJ102 | M.RESISTOR CH 1/16W 1K | 1 | |
| R1145 | ERJ2RHD182 | M.RESISTOR CH 1/16W 1.8K | 1 | |
| R1146 | ERJ2RHD272 | M.RESISTOR CH 1/16W 2.7K | 1 | |
| R1147 | ERJ2RHD151 | M.RESISTOR CH 1/16W 150 | 1 | |
| R1148,49 | ERJ2GE0R00 | M.RESISTOR CH 1/16W 0 | 2 | |
| R1151 | ERJ2RHD153 | M.RESISTOR CH 1/16W 15K | 1 | |
| R1152 | ERJ2GEJ152 | M.RESISTOR CH 1/16W 1.5K | 1 | |
| R1153 | ERJ2RHD223 | M.RESISTOR CH 1/16W 22K | 1 | |
| R1154 | ERJ2GE0R00 | M.RESISTOR CH 1/16W 0 | 1 | |
| R1157 | ERJ2RHD333 | M.RESISTOR CH 1/16W 33K | 1 | |
| R1158 | ERJ2RHD272 | M.RESISTOR CH 1/16W 2.7K | 1 | |
| R1159 | ERJ2RHD101 | M.RESISTOR CH 1/16W 100 | 1 | |
| R1241 | ERJ2GE0R00 | M.RESISTOR CH 1/16W 0 | 1 | |
| R1251 | ERJ2GEJ103 | M.RESISTOR CH 1/16W 10K | 1 | |
| R1402 | ERJ2GEJ102 | M.RESISTOR CH 1/16W 1K | 1 | |
| R1501 | ERJ2RHD683 | M.RESISTOR CH 1/16W 68K | 1 | |
| R1503 | ERJ2GEJ222 | M.RESISTOR CH 1/16W 2.2K | 1 | |
| ⚠ R1524 | K5H6312A0008 | FUSE | 1 | |
| ⚠ R1525 | K5H1222A0008 | FUSE | 1 | |
| ⚠ R1526 | K5H6312A0008 | FUSE | 1 | |
| R1601 | ERJ2RHD472 | M.RESISTOR CH 1/16W 4.7K | 1 | |
| R1602 | ERJ2RHD151 | M.RESISTOR CH 1/16W 150 | 1 | |
| R1603 | ERJ2RHD272 | M.RESISTOR CH 1/16W 2.7K | 1 | |
| R1605 | ERJ2GE0R00 | M.RESISTOR CH 1/16W 0 | 1 | |
| R1607 | ERJ2GEJ562 | M.RESISTOR CH 1/16W 5.6K | 1 | |
| R1608 | ERJ3RBD243 | M.RESISTOR CH 1/16W 24K | 1 | |
| R1612 | ERJ2GEJ102 | M.RESISTOR CH 1/16W 1K | 1 | |
| R1618 | ERJ3GEY0R00 | M.RESISTOR CH 1/16W 0 | 1 | |
| R1619 | ERJ2GEJ473 | M.RESISTOR CH 1/16W 47K | 1 | |
| R1621 | ERJ2GEJ153 | M.RESISTOR CH 1/16W 15K | 1 | |
| ⚠ R1625 | K5H1021A0004 | IC | 1 | |
| R1627,28 | ERJ3GEY0R00 | M.RESISTOR CH 1/16W 0 | 2 | |
| R1630,31 | ERJ2GE0R00 | M.RESISTOR CH 1/16W 0 | 2 | |
| R1634 | ERJ6GEY0R00 | M.RESISTOR CH 1/10W 0 | 1 | D0YDR0000005 |
| R1635,36 | ERJ2GE0R00 | M.RESISTOR CH 1/16W 0 | 2 | |
| | | | | |
| | | | | |

Components identified with the mark ⚠ have special characteristics for safety.
When replacing any of these component, use only the same type.

| Ref.No. | Part No. | Part Name & Description | Pcs | Remarks |
|---|---|---|---|---|
| R1638 | ERJ2RHD821 | M.RESISTOR CH 1/16W 820 | 1 | |
| R1639 | ERJ2RHD271 | M.RESISTOR CH 1/16W 270 | 1 | |
| R1640 | ERJ2RHD272 | M.RESISTOR CH 1/16W 2.7K | 1 | |
| R1641 | ERJ2GE0R00 | M.RESISTOR CH 1/16W 0 | 1 | |
| R1643 | ERJ2GE0R00 | M.RESISTOR CH 1/16W 0 | 1 | |
| R1681 | ERJ2GEJ151 | M.RESISTOR CH 1/16W 150 | 1 | |
| R1682 | ERJ2GEJ222 | M.RESISTOR CH 1/16W 2.2K | 1 | |
| R1901 | ERJ2GEJ103 | M.RESISTOR CH 1/16W 10K | 1 | |
| R1912 | ERJ2GEJ474 | M.RESISTOR CH 1/16W 470K | 1 | |
| R1925 | ERJ2GEJ474 | M.RESISTOR CH 1/16W 470K | 1 | |
| R1926 | ERJ2GEJ472 | M.RESISTOR CH 1/16W 4.7K | 1 | |
| R1928 | ERJ2GEJ274 | M.RESISTOR CH 1/16W 270K | 1 | |
| R1929 | ERJ2GE0R00 | M.RESISTOR CH 1/16W 0 | 1 | |
| R1930 | ERJ2GEJ105 | M.RESISTOR CH 1/16W 1M | 1 | |
| | | | | |
| T1051 | G5D1A0000033 | TRANSFORMER | 1 | |
| | | | | |
| | | MISCELLANEOUS | | |
| | | | | |
| | VMP8005 | POWER PCB HOLDER | 1 | |
| | VSC5590 | POWER PCB SHIELD (L) | 1 | |
| | VSC5589 | POWER PCB SHIELD (U) | 1 | |
| | XQN16+B3FN | SCREW | 2 | |
| | VMX3424 | GYRO PCB SPACER | 1 | |
| | | | | |
| | | | | |
| | | | | |
| | | | | |
| | | | | |
| ■ E2 | VEP03G60A | VTR C.B.A. | 1 | (RTL) |
| | | | | |
| | | | | |
| C600 | ECJ1VB0J105K | C.CAPACITOR CH 35V 1M | 1 | |
| C602 | ECJ0EC1H680J | C.CAPACITOR CH 50V 68P | 1 | |
| C604 | F3G1A4760002 | T.CAPACITOR CH 10V 47U | 1 | |
| C605 | ECJ1VB0J105K | C.CAPACITOR CH 35V 1M | 1 | |
| C606,07 | ECJ0EB1A104K | C.CAPACITOR CH 10V 0.1U | 2 | |
| C610 | ECJ0WB1C103K | C.CAPACITOR CH 16V 0.01U | 1 | |
| C611 | ECJ0EB1A104K | C.CAPACITOR CH 10V 0.1U | 1 | |
| C612 | ECJ1VB0J105K | C.CAPACITOR CH 35V 1M | 1 | |
| C614 | ECJ0EB1E102K | C.CAPACITOR CH 25V 1000P | 1 | |
| C616 | ECJ1VB0J105K | C.CAPACITOR CH 35V 1M | 1 | |
| C617 | F1J1C105A091 | C.CAPACITOR CH 16V 1U | 1 | |
| C618-20 | F1H0J474A002 | C.CAPACITOR CH6.3V 0.47U | 3 | |
| C625 | F1H0J474A002 | C.CAPACITOR CH6.3V 0.47U | 1 | |
| C626 | ECJ1VB0J105K | C.CAPACITOR CH 35V 1M | 1 | |
| C627 | ECJ0EB1A104K | C.CAPACITOR CH 10V 0.1U | 1 | |
| C628 | ECJ1VB0J105K | C.CAPACITOR CH 35V 1M | 1 | |
| C629 | ECST0JY335Z | T.CAPACITOR CH6.3V 3.3U | 1 | |
| C630 | ECJ0EB1C682K | C.CAPACITOR CH 16V 6800P | 1 | |
| C631 | ECJ1VB1C104K | C.CAPACITOR CH 16V 0.1U | 1 | |
| C633 | ECJ0EB1A104K | C.CAPACITOR CH 10V 0.1U | 1 | |
| C666 | F1K1E225A047 | C.CAPACITOR CH 25V 2.2U | 1 | |
| C672 | ECJ2YB1A105K | C.CAPACITOR CH 10V 1U | 1 | |
| C2001 | ECJ0EB1A104K | C.CAPACITOR CH 10V 0.1U | 1 | |
| C2002 | ECJ0WB1C103K | C.CAPACITOR CH 16V 0.01U | 1 | |
| C2003 | ECJ0EB1A104K | C.CAPACITOR CH 10V 0.1U | 1 | |
| C2004,05 | ECJ0WB1C103K | C.CAPACITOR CH 16V 0.01U | 2 | |
| C2006 | F3F1A1060001 | T.CAPACITOR CH 10V 10U | 1 | |
| C2007,08 | ECJ0EB1A104K | C.CAPACITOR CH 10V 0.1U | 2 | |
| C2009,10 | ECJ0WB1C103K | C.CAPACITOR CH 16V 0.01U | 2 | |
| C2011 | ECJ1VB0J105K | C.CAPACITOR CH 35V 1M | 1 | |
| C2012 | ECJ0WB1C103K | C.CAPACITOR CH 16V 0.01U | 1 | |
| C2013-15 | ECJ0EB1A104K | C.CAPACITOR CH 10V 0.1U | 3 | |
| C2016 | ECJ0WB1C103K | C.CAPACITOR CH 16V 0.01U | 1 | |
| C2019 | ECJ0EB1A104K | C.CAPACITOR CH 10V 0.1U | 1 | |
| C2020,21 | ECJ0WB1C103K | C.CAPACITOR CH 16V 0.01U | 2 | |
| C2024 | ECJ0EB1A104K | C.CAPACITOR CH 10V 0.1U | 1 | |
| C2025 | ECJ0EC1H050C | C.CAPACITOR CH 50V 5P | 1 | |
| C2028 | ECJ0WB1C103K | C.CAPACITOR CH 16V 0.01U | 1 | |
| C2029 | ECJ0EB1A104K | C.CAPACITOR CH 10V 0.1U | 1 | |
| C2030 | F1G1H100A448 | C.CAPACITOR CH 50V 10P | 1 | |
| C2031 | ECJ0EB1E102K | C.CAPACITOR CH 25V 1000P | 1 | |
| C2033 | ECJ0EB1E102K | C.CAPACITOR CH 25V 1000P | 1 | |
| C2034 | F3F1A1060001 | T.CAPACITOR CH 10V 10U | 1 | |
| | | | | |
| | | | | |

| Ref.No. | Part No. | Part Name & Description | Pcs | Remarks |
|---|---|---|---|---|
| C2037 | ECJ0EB1A473K | C.CAPACITOR CH 10V 0.047U | 1 | |
| C2041 | ECJ0WB1C103K | C.CAPACITOR CH 16V 0.01U | 1 | |
| C2043 | F1G1H100A448 | C.CAPACITOR CH 50V 10P | 1 | |
| C2047 | ECJ0WB1C103K | C.CAPACITOR CH 16V 0.01U | 1 | |
| C2048 | ECJ1VB0J105K | C.CAPACITOR CH 35V 1M | 1 | |
| C2053 | ECJ0WB1C103K | C.CAPACITOR CH 16V 0.01U | 1 | |
| C2054 | F3F1A1060001 | T.CAPACITOR CH 10V 10U | 1 | |
| C2055 | ECJ0WB1C103K | C.CAPACITOR CH 16V 0.01U | 1 | |
| C2063 | ECJ0EB1A104K | C.CAPACITOR CH 10V 0.1U | 1 | |
| C2072 | ECJ1VB0J105K | C.CAPACITOR CH 35V 1M | 1 | |
| C2201,02 | ECJ1VB0J105K | C.CAPACITOR CH 35V 1M | 2 | |
| C2203 | F3F1A1060001 | T.CAPACITOR CH 10V 10U | 1 | |
| C2204 | ECJ0EC1H470J | C.CAPACITOR CH 50V 47P | 1 | |
| C2205-08 | ECJ0EB1A104K | C.CAPACITOR CH 10V 0.1U | 4 | |
| C2209 | ECJ1VB1C104K | C.CAPACITOR CH 16V 0.1U | 1 | |
| C2212 | ECJ1VB0J105K | C.CAPACITOR CH 35V 1M | 1 | |
| C2213 | ECJ0WB1C103K | C.CAPACITOR CH 16V 0.01U | 1 | |
| C2216 | ECJ1VB0J105K | C.CAPACITOR CH 35V 1M | 1 | |
| C2217-20 | ECJ0EB1A104K | C.CAPACITOR CH 10V 0.1U | 4 | |
| C2221 | ECJ1VB0J105K | C.CAPACITOR CH 35V 1M | 1 | |
| C2222,23 | ECJ0EB1E472K | C.CAPACITOR CH 25V 4700P | 2 | |
| C2225 | ECJ1VB0J105K | C.CAPACITOR CH 35V 1M | 1 | |
| C2226 | F3F1A1060001 | T.CAPACITOR CH 10V 10U | 1 | |
| C2230 | ECJ0EC1H101J | C.CAPACITOR CH 50V 100P | 1 | |
| C2231 | F1J1C105A091 | C.CAPACITOR CH 16V 1U | 1 | |
| C2232 | ECJ0WB1C103K | C.CAPACITOR CH 16V 0.01U | 1 | |
| C2243 | ECJ1VB1C104K | C.CAPACITOR CH 16V 0.1U | 1 | |
| C3001 | ECJ1VB0J105K | C.CAPACITOR CH 35V 1M | 1 | |
| C3002 | ECJ0EB1A104K | C.CAPACITOR CH 10V 0.1U | 1 | |
| C3003 | F3F1A1060001 | T.CAPACITOR CH 10V 10U | 1 | |
| C3004 | ECJ1VB0J105K | C.CAPACITOR CH 35V 1M | 1 | |
| C3005 | F3G1A4760001 | T.CAPACITOR CH 10V 47U | 1 | |
| C3006 | F3F1A1060001 | T.CAPACITOR CH 10V 10U | 1 | |
| C3007 | ECJ0EB1A104K | C.CAPACITOR CH 10V 0.1U | 1 | |
| C3008 | F3F1A1060001 | T.CAPACITOR CH 10V 10U | 1 | |
| C3009 | ECJ0EB1A104K | C.CAPACITOR CH 10V 0.1U | 1 | |
| C3010-12 | ECJ1VB0J105K | C.CAPACITOR CH 35V 1M | 3 | |
| C3013 | ECJ0WB1C103K | C.CAPACITOR CH 16V 0.01U | 1 | |
| C3014 | ECJ0EB1A104K | C.CAPACITOR CH 10V 0.1U | 1 | |
| C3015 | F3F1A1060001 | T.CAPACITOR CH 10V 10U | 1 | |
| C3016 | ECJ0EB1A104K | C.CAPACITOR CH 10V 0.1U | 1 | |
| C3017 | F3F1A1060001 | T.CAPACITOR CH 10V 10U | 1 | |
| C3018 | ECJ0EB1A104K | C.CAPACITOR CH 10V 0.1U | 1 | |
| C3019 | ECJ0WB1C103K | C.CAPACITOR CH 16V 0.01U | 1 | |
| C3020,21 | ECJ0EB1A104K | C.CAPACITOR CH 10V 0.1U | 2 | |
| C3024,25 | ECJ0EB1A104K | C.CAPACITOR CH 10V 0.1U | 2 | |
| C3027 | ECJ0EB1A104K | C.CAPACITOR CH 10V 0.1U | 1 | |
| C3029 | ECJ0EB1A104K | C.CAPACITOR CH 10V 0.1U | 1 | |
| C3030 | ECJ0WB1C103K | C.CAPACITOR CH 16V 0.01U | 1 | |
| C3031 | ECJ0EB1A104K | C.CAPACITOR CH 10V 0.1U | 1 | |
| C3033 | ECJ0WB1C103K | C.CAPACITOR CH 16V 0.01U | 1 | |
| C3034 | F3F1A1060001 | T.CAPACITOR CH 10V 10U | 1 | |
| C3035,36 | ECJ0EB1A104K | C.CAPACITOR CH 10V 0.1U | 2 | |
| C3038 | F3F1A226A001 | T.CAPACITOR CH 10V 22U | 1 | |
| C3039 | ECJ0EB1A104K | C.CAPACITOR CH 10V 0.1U | 1 | |
| C3041 | ECJ0EB1A104K | C.CAPACITOR CH 10V 0.1U | 1 | |
| C3043 | ECJ1VB0J105K | C.CAPACITOR CH 35V 1M | 1 | |
| C3045 | ECJ1VB0J225K | C.CAPACITOR CH6.3V 2.2U | 1 | |
| C3046,47 | ECJ1VB0J105K | C.CAPACITOR CH 35V 1M | 2 | |
| C3053 | ECJ1VB0J105K | C.CAPACITOR CH 35V 1M | 1 | |
| C3055 | F3G1A4760002 | T.CAPACITOR CH 10V 47U | 1 | |
| C3056 | ECJ0EB1A104K | C.CAPACITOR CH 10V 0.1U | 1 | |
| C3061 | F1J0J475A008 | C.CAPACITOR CH6.3V 4.7U | 1 | |
| C3062 | ECJ0EB1A104K | C.CAPACITOR CH 10V 0.1U | 1 | |
| C3063 | F1J0J475A008 | C.CAPACITOR CH6.3V 4.7U | 1 | |
| C3064-67 | ECJ0EB1A104K | C.CAPACITOR CH 10V 0.1U | 4 | |
| C3101 | ECJ0EB1A104K | C.CAPACITOR CH 10V 0.1U | 1 | |
| C3102,03 | ECJ0WB1C103K | C.CAPACITOR CH 16V 0.01U | 2 | |
| C3104 | F1J0J475A008 | C.CAPACITOR CH6.3V 4.7U | 1 | |
| C3105,06 | ECJ0WB1C103K | C.CAPACITOR CH 16V 0.01U | 2 | |
| C3107 | ECJ0EB1A104K | C.CAPACITOR CH 10V 0.1U | 1 | |
| C3108 | F3F1A226A001 | T.CAPACITOR CH 10V 22U | 1 | |
| C3109 | ECJ0WB1C103K | C.CAPACITOR CH 16V 0.01U | 1 | |
| C3110 | F3H1A1070006 | T.CAPACITOR CH 10V 100U | 1 | |
| C3111 | ECJ0WB1C103K | C.CAPACITOR CH 16V 0.01U | 1 | |
| | | | | |
| | | | | |

Components identified with the mark ⚠ have special characteristics for safety.
When replacing any of these component, use only the same type.

| Ref.No. | Part No. | Part Name & Description | Pcs | Remarks |
|---|---|---|---|---|
| C3112 | ECJ1VB0J225K | C.CAPACITOR CH6.3V 2.2U | 1 | |
| C3113 | F3G1C2260001 | T.CAPACITOR CH 16V 22U | 1 | |
| C3114 | F1J0J475A008 | C.CAPACITOR CH6.3V 4.7U | 1 | |
| C3115 | ECJ0EB1A104K | C.CAPACITOR CH 10V 0.1U | 1 | |
| C3116,17 | ECJ1VB0J225K | C.CAPACITOR CH6.3V 2.2U | 2 | |
| C3118 | ECJ1VB0J105K | C.CAPACITOR CH 35V 1M | 1 | |
| C3119 | F3H0J1070005 | T.CAPACITOR CH6.3V 100U | 1 | |
| C3120 | F3F0J226A007 | T.CAPACITOR CH6.3V 22U | 1 | |
| C3121 | F3E0G1060002 | T.CAPACITOR CH 4V 10U | 1 | |
| C3122 | F3F0J226A007 | T.CAPACITOR CH6.3V 22U | 1 | |
| C3123 | F3F1A1060001 | T.CAPACITOR CH 10V 10U | 1 | |
| C3124 | ECJ1VB0J105K | C.CAPACITOR CH 35V 1M | 1 | |
| C3125 | F1J0J475A008 | C.CAPACITOR CH6.3V 4.7U | 1 | |
| C3126 | ECJ1VB1C104K | C.CAPACITOR CH 16V 0.1U | 1 | |
| C3127 | ECJ0WB1C103K | C.CAPACITOR CH 16V 0.01U | 1 | |
| C3128 | ECJ1VB0J225K | C.CAPACITOR CH6.3V 2.2U | 1 | |
| C3129 | ECJ1VB0J105K | C.CAPACITOR CH 35V 1M | 1 | |
| C3130 | F3G1A4760002 | T.CAPACITOR CH 10V 47U | 1 | |
| C3131,32 | ECJ1VB0J225K | C.CAPACITOR CH6.3V 2.2U | 2 | |
| C3133 | F3G1A4760002 | T.CAPACITOR CH 10V 47U | 1 | |
| C3134 | ECJ0WB1C103K | C.CAPACITOR CH 16V 0.01U | 1 | |
| C3135 | F3G1A4760002 | T.CAPACITOR CH 10V 47U | 1 | |
| C3136,37 | ECJ1VB0J105K | C.CAPACITOR CH 35V 1M | 2 | |
| C3138 | F3F1A1060001 | T.CAPACITOR CH 10V 10U | 1 | |
| C3139 | F3E0J106A005 | T.CAPACITOR CH6.3V 10U | 1 | |
| C3140,41 | ECJ0EB1A104K | C.CAPACITOR CH 10V 0.1U | 2 | |
| C3142 | F3G1A4760002 | T.CAPACITOR CH 10V 47U | 1 | |
| C3201 | ECJ1VB0J105K | C.CAPACITOR CH 35V 1M | 1 | |
| C3202 | F1J0J475A008 | C.CAPACITOR CH6.3V 4.7U | 1 | |
| C3203 | F3E0J106A005 | T.CAPACITOR CH6.3V 10U | 1 | |
| C3204-08 | ECJ0EB1A104K | C.CAPACITOR CH 10V 0.1U | 5 | |
| C3210 | F3E0J106A005 | T.CAPACITOR CH6.3V 10U | 1 | |
| C3212,13 | ECJ0EB1A104K | C.CAPACITOR CH 10V 0.1U | 2 | |
| C3215 | ECJ0EB1A104K | C.CAPACITOR CH 10V 0.1U | 1 | |
| C3218-20 | ECJ0EB1A104K | C.CAPACITOR CH 10V 0.1U | 3 | |
| C3221 | F1J0J475A008 | C.CAPACITOR CH6.3V 4.7U | 1 | |
| C3229 | ECJ0EB1A104K | C.CAPACITOR CH 10V 0.1U | 1 | |
| C3252 | ECJ1VB0J105K | C.CAPACITOR CH 35V 1M | 1 | |
| C3253 | ECJ0EC1H221J | C.CAPACITOR CH 50V 220P | 1 | |
| C3254 | ECJ1VB0J105K | C.CAPACITOR CH 35V 1M | 1 | |
| C3255 | ECJ0EB1A104K | C.CAPACITOR CH 10V 0.1U | 1 | |
| C3257 | F3G1A4760002 | T.CAPACITOR CH 10V 47U | 1 | |
| C3259 | ECJ0EB1A104K | C.CAPACITOR CH 10V 0.1U | 1 | |
| C3260 | ECJ0EC1H220J | C.CAPACITOR CH 50V 22P | 1 | |
| C3501-03 | ECJ1VB0J105K | C.CAPACITOR CH 35V 1M | 3 | |
| C3504,05 | ECJ0WB1C103K | C.CAPACITOR CH 16V 0.01U | 2 | |
| C3506 | ECJ0EB1A104K | C.CAPACITOR CH 10V 0.1U | 1 | |
| C3507,08 | ECJ0WB1C103K | C.CAPACITOR CH 16V 0.01U | 2 | |
| C3509,10 | ECJ0EB1A104K | C.CAPACITOR CH 10V 0.1U | 2 | |
| C3511 | F3F1A1060001 | T.CAPACITOR CH 10V 10U | 1 | |
| C3512,13 | ECJ0EB1A104K | C.CAPACITOR CH 10V 0.1U | 2 | |
| C3514,15 | ECJ0EB1E102K | C.CAPACITOR CH 25V 1000P | 2 | |
| C3516 | ECJ0EB1A104K | C.CAPACITOR CH 10V 0.1U | 1 | |
| C3517,18 | ECJ0WB1C103K | C.CAPACITOR CH 16V 0.01U | 2 | |
| C3519 | ECJ0EB1A104K | C.CAPACITOR CH 10V 0.1U | 1 | |
| C3520 | ECJ0WB1C103K | C.CAPACITOR CH 16V 0.01U | 1 | |
| C3521-23 | ECJ0EB1A104K | C.CAPACITOR CH 10V 0.1U | 3 | |
| C3551 | ECJ0EC1H220J | C.CAPACITOR CH 50V 22P | 1 | |
| C3552,53 | ECJ0EC1H560J | C.CAPACITOR CH 50V 56P | 2 | |
| C3554 | ECJ0EC1H220J | C.CAPACITOR CH 50V 22P | 1 | |
| C3555 | ECJ0EB1E102K | C.CAPACITOR CH 25V 1000P | 1 | |
| C3556 | F3F1C1060002 | T.CAPACITOR CH 16V 10U | 1 | |
| C3557 | ECJ0EB1A104K | C.CAPACITOR CH 10V 0.1U | 1 | |
| C3558-60 | ECJ0WB1C103K | C.CAPACITOR CH 16V 0.01U | 3 | |
| C3561 | ECJ0EC1H220J | C.CAPACITOR CH 50V 22P | 1 | |
| C3562 | ECJ0EC1H560J | C.CAPACITOR CH 50V 56P | 1 | |
| C3563 | ECJ0EC1H390J | C.CAPACITOR CH 50V 39P | 1 | |
| C3564 | ECJ0EB1E102K | C.CAPACITOR CH 25V 1000P | 1 | |
| C3566 | F3E0J106A005 | T.CAPACITOR CH6.3V 10U | 1 | |
| C3569 | ECJ0WB1C103K | C.CAPACITOR CH 16V 0.01U | 1 | |
| C3570 | ECJ0EB1A104K | C.CAPACITOR CH 10V 0.1U | 1 | |
| C4000,01 | ECJ1VC1H330J | C.CAPACITOR CH 50V 33P | 2 | |
| C4002 | ECJ1VB1C104K | C.CAPACITOR CH 16V 0.1U | 1 | |
| C4003,04 | ECUM1E823KBN | C.CAPACITOR CH 25V 0.082U | 2 | |
| C4005,06 | ECJ1VB1E223K | C.CAPACITOR CH 25V 0.022U | 2 | |

| Ref.No. | Part No. | Part Name & Description | Pcs | Remarks |
|---|---|---|---|---|
| C4007,08 | ECUX1A105KBV | C.CAPACITOR CH 10V 1U | 2 | |
| C4009 | ECJ1VB1C104K | C.CAPACITOR CH 16V 0.1U | 1 | |
| C4010 | F1J0J475A008 | C.CAPACITOR CH6.3V 4.7U | 1 | |
| C4011,12 | F1J1A335A003 | C.CAPACITOR CH 10V 3.3U | 2 | |
| C4013 | F3F1A226A008 | T.CAPACITOR CH 10V 22U | 1 | |
| C4014 | F3G1C2260001 | T.CAPACITOR CH 16V 22U | 1 | |
| C4015 | ECJ1VB1C104K | C.CAPACITOR CH 16V 0.1U | 1 | |
| C4017-20 | ECUX1C273KBV | C.CAPACITOR CH 16V 0.027U | 4 | |
| C4021,22 | ECJ1VB1C104K | C.CAPACITOR CH 16V 0.1U | 2 | |
| C4025,26 | ECJ1VB1C104K | C.CAPACITOR CH 16V 0.1U | 2 | |
| C4029,30 | F3F1A226A008 | T.CAPACITOR CH 10V 22U | 2 | |
| C5001 | F3H1C4760008 | T.CAPACITOR CH 16V 47U | 1 | |
| C5002,03 | F1J0J475A008 | C.CAPACITOR CH6.3V 4.7U | 2 | |
| C5005 | ECJ0EB1E681K | C.CAPACITOR CH 25V 680P | 1 | |
| C5008 | ECJ0WB1C103K | C.CAPACITOR CH 16V 0.01U | 1 | |
| C5012 | ECJ0EB1A104K | C.CAPACITOR CH 10V 0.1U | 1 | |
| C5013 | ECJ0WB1C103K | C.CAPACITOR CH 16V 0.01U | 1 | |
| C5014 | ECJ1VC1H470J | C.CAPACITOR CH 50V 47P | 1 | |
| C5021-24 | ECJ0EC1H080C | C.CAPACITOR CH 50V 8P | 4 | |
| | | | | |
| D1 | B0JDAD000001 | DIODE | 1 | |
| D601 | MA338 | DIODE | 1 | MA2X338 |
| D602 | MA111 | DIODE | 1 | |
| D2001 | MA133 | DIODE | 1 | |
| D2006 | MA2SD2400L | DIODE | 1 | |
| D2009 | MA2SD2400L | DIODE | 1 | |
| D2012 | MA111 | DIODE | 1 | |
| D2013 | MA2SD2400L | DIODE | 1 | |
| D2014 | MA2S11100L | DIODE | 1 | |
| D2201 | MA133 | DIODE | 1 | |
| D3102,03 | D4ED1220A006 | VARISTOR | 2 | |
| | | | | |
| IC601 | C0HBA0000094 | IC | 1 | |
| IC602 | C0JBAA000115 | IC | 1 | |
| IC2001 | C2DBLK000004 | IC | 1 | |
| IC2005 | C0ABAA000046 | IC | 1 | |
| IC2007 | C1ZBZ0002226 | IC | 1 | |
| IC2008 | C3EBGG000015 | IC | 1 | |
| IC2011 | C0CBAAA00016 | IC | 1 | |
| IC2012 | C0EBD0000171 | IC | 1 | |
| IC2013 | C0CBCAC00082 | IC | 1 | |
| IC2014 | C0CBABC00137 | IC | 1 | |
| IC2201 | C1AB00001752 | IC | 1 | |
| IC3001 | C1AB00001797 | IC | 1 | |
| IC3002 | AN2903FJQ-V | IC | 1 | |
| IC3004 | C0FBZJ000005 | IC | 1 | |
| IC3005 | C1BB00000820 | IC | 1 | |
| IC3006 | C0JBAA000246 | IC | 1 | |
| IC3007 | C0JBAC000265 | IC | 1 | |
| IC3008 | C0ZBZ0000830 | IC | 1 | |
| IC3009 | C0CBAAE00016 | IC | 1 | |
| IC3201 | C1AB00001695 | IC | 1 | |
| IC3202 | C1AB00001612 | IC | 1 | |
| IC3501 | C1AB00001280 | IC | 1 | |
| IC3502 | C0ABAA000046 | IC | 1 | |
| IC3503 | C1AB00000647 | IC | 1 | |
| IC4000,01 | TA75W01FU | IC | 2 | |
| IC4002 | C0ZBZ0000043 | IC | 1 | |
| IC4003,04 | TA75S01F | IC | 2 | |
| IC4005 | TC4W53FU | IC | 1 | |
| IC4008 | TC4W53FU | IC | 1 | |
| IC5001 | AN3732FJMEFV | IC | 1 | |
| | | | | |
| L601 | VLQ0426J3R3 | COIL 3.3UH | 1 | G1C3R3J00009 |
| L605,06 | VLQ0807K220 | COIL 22UH | 2 | G1C220K00016 |
| L2002 | VLQ0807K220 | COIL 22UH | 1 | G1C220K00016 |
| L3006 | G1C100MA0060 | COIL 10UH | 1 | |
| L3009 | G1C100KA0055 | COIL 10UH | 1 | |
| L3011-14 | G1C100KA0055 | COIL 10UH | 4 | |
| L3015 | G1C101KA0055 | COIL 100UH | 1 | |
| L3017 | G1C470MA0072 | COIL 47UH | 1 | |
| L3018 | G1C100K00019 | COIL 10UH | 1 | |
| L3021-23 | G1C100KA0055 | COIL 10UH | 3 | |
| L3204 | G1C101KA0055 | COIL 100UH | 1 | |
| L3206 | G1C100KA0055 | COIL 10UH | 1 | |

Components identified with the mark ⚠ have special characteristics for safety.
When replacing any of these component, use only the same type.

| Ref.No. | Part No. | Part Name & Description | Pcs | Remarks |
|---|---|---|---|---|
| L3501 | G1C100KA0055 | COIL 10UH | 1 | |
| L3505-09 | G1C330K00017 | COIL 33UH | 5 | |
| L4000 | G1C100MA0060 | COIL 10UH | 1 | |
| L5001 | G1C101KA0055 | COIL 100UH | 1 | |
| L5002,03 | G1C100MA0060 | COIL 10UH | 2 | |
| | | | | |
| LB3001 | J0JAC0000014 | FILTER | 1 | |
| LB3003,04 | J0JAC0000014 | FILTER | 2 | |
| LB3006 | J0JAC0000014 | FILTER | 1 | |
| LB3201 | J0JAC0000014 | FILTER | 1 | |
| LB3203 | J0JAC0000014 | FILTER | 1 | |
| LB3205 | J0JAC0000014 | FILTER | 1 | |
| LB3502,03 | J0JBC0000012 | FILTER | 2 | |
| | | | | |
| P2200 | K1KBC0A00028 | CONNECTOR (FEMALE) | 1 | |
| P2201 | K1KB40A00131 | CONNECTOR (FEMALE) | 1 | |
| P2210 | K1MN08A00032 | CONNECTOR | 1 | |
| P2211 | K1MN08B00040 | CONNECTOR | 1 | |
| P2212,13 | K1MN18B00049 | CONNECTOR | 2 | |
| P2214 | K1MN10B00062 | CONNECTOR | 1 | |
| P2215 | VJS3826C030 | CONNECTOR (FEMALE) | 1 | |
| P2216 | VJS3791D024 | CONNECTOR (FEMALE) | 1 | K1MN24B00012 |
| P2217 | K1MN33B00023 | CONNECTOR | 1 | |
| P2219 | K1KB60A00122 | CONNECTOR (FEMALE) | 1 | |
| P2220 | VJP3172D002 | CONNECTOR (MALE) | 1 | K1KA02B00051 |
| P2221 | K1KA02B00053 | CONNECTOR (MALE) | 1 | |
| P2222 | K1KA08A00267 | CONNECTOR (MALE) | 1 | |
| P2224 | K1KB30B00014 | CONNECTOR (FEMALE) | 1 | |
| | | | | |
| Q601 | B1ADGD000005 | TRANSISTOR | 1 | |
| Q602 | B1ADBE000001 | TRANSISTOR | 1 | |
| Q603 | XP1501 | TRANSISTOR-RESISTOR | 1 | |
| Q605 | B1ADGD000005 | TRANSISTOR | 1 | |
| Q608 | B1ADGD000005 | TRANSISTOR | 1 | |
| Q611 | 2SD2216J0L | TRANSISTOR | 1 | |
| Q2001 | 2SB0970X0L | TRANSISTOR | 1 | |
| Q2002 | 2SA202100L | TRANSISTOR | 1 | |
| Q2003 | 2SD182000L | TRANSISTOR | 1 | |
| Q2004 | B1CHHD000003 | TRANSISTOR | 1 | |
| Q2007 | B1ACGD000006 | TRANSISTOR | 1 | |
| Q3101-03 | B1ABBE000002 | TRANSISTOR | 3 | |
| Q3501 | B1ACGD000006 | TRANSISTOR | 1 | |
| Q3503 | XP0460100L | TRANSISTOR | 1 | |
| Q3504 | 2SB1218AHL | TRANSISTOR | 1 | |
| Q3505 | B1ABBE000002 | TRANSISTOR | 1 | |
| Q3506 | XP0460100L | TRANSISTOR | 1 | |
| Q4000,01 | 2SD1819A-R | TRANSISTOR | 2 | |
| Q4002 | 2SD1824 | TRANSISTOR | 1 | |
| Q4003,04 | XP0121300L | TRANSISTOR | 2 | |
| | | | | |
| QR604 | B1GBCFLL0022 | TRANSISTOR | 1 | |
| QR2001 | UNR321F00L | TRANSISTOR | 1 | |
| QR2003 | UNR321F00L | TRANSISTOR | 1 | |
| QR2006,07 | XP0411500L | TRANSISTOR | 2 | |
| QR2012 | XP0431N00L | TRANSISTOR | 1 | |
| QR3104 | UNR221300L | TRANSISTOR | 1 | |
| QR3502 | B1GBBEKK0001 | TRANSISTOR | 1 | |
| | | | | |
| R601 | ERJ6GEYJ4R7 | M.RESISTOR CH 1/10W 4.7K | 1 | |
| R602 | ERJ2GEJ223 | M.RESISTOR CH 1/16W 22K | 1 | |
| R604 | ERJ6GEY0R00 | M.RESISTOR CH 1/10W 0 | 1 | D0YDR0000005 |
| R606 | ERJ2GEJ102 | M.RESISTOR CH 1/16W 1K | 1 | |
| R609 | ERJ2GEJ102 | M.RESISTOR CH 1/16W 1K | 1 | |
| R610,11 | ERJ2GEJ101 | M.RESISTOR CH 1/16W 100 | 2 | |
| R614 | ERJ2GEJ102 | M.RESISTOR CH 1/16W 1K | 1 | |
| R615 | ERJ2GEJ333 | M.RESISTOR CH 1/16W 33K | 1 | |
| R616 | ERJ2GEJ101 | M.RESISTOR CH 1/16W 100 | 1 | |
| R617 | ERJ2GEJ102 | M.RESISTOR CH 1/16W 1K | 1 | |
| R618,19 | ERJ2GEJ103 | M.RESISTOR CH 1/16W 10K | 2 | |
| R622 | ERJ2GEJ223 | M.RESISTOR CH 1/16W 22K | 1 | |
| R623 | ERJ2GEJ273 | M.RESISTOR CH 1/16W 27K | 1 | |
| R624,25 | ERJ2GEJ104 | M.RESISTOR CH 1/16W 100K | 2 | |
| R626 | ERJ2GEJ102 | M.RESISTOR CH 1/16W 1K | 1 | |
| R627 | ERJ2GEJ473 | M.RESISTOR CH 1/16W 47K | 1 | |
| R628 | ERJ2RHD473 | M.RESISTOR CH 1/16W 47K | 1 | |

| Ref.No. | Part No. | Part Name & Description | Pcs | Remarks |
|---|---|---|---|---|
| R629 | ERJ2GEJ153 | M.RESISTOR CH 1/16W 15K | 1 | |
| R630 | ERJ2GEJ222 | M.RESISTOR CH 1/16W 2.2K | 1 | |
| R631 | ERJ2RHD113 | M.RESISTOR CH 1/16W 11K | 1 | |
| R632 | ERJ2RHD183 | M.RESISTOR CH 1/16W 18K | 1 | |
| R633 | ERJ2GEJ223 | M.RESISTOR CH 1/16W 22K | 1 | |
| R636 | ERJ6GEY0R00 | M.RESISTOR CH 1/10W 0 | 1 | D0YDR0000005 |
| R638-40 | ERJ2GEJ101 | M.RESISTOR CH 1/16W 100 | 3 | |
| R642 | ERJ2GEJ153 | M.RESISTOR CH 1/16W 15K | 1 | |
| R644 | ERJ2GEJ332 | M.RESISTOR CH 1/16W 3.3K | 1 | |
| R647 | ERJ2GEJ102 | M.RESISTOR CH 1/16W 1K | 1 | |
| R648-50 | ERJ2GEJ101 | M.RESISTOR CH 1/16W 100 | 3 | |
| R651 | ERJ2GEJ104 | M.RESISTOR CH 1/16W 100K | 1 | |
| R657 | ERJ2GEJ394 | M.RESISTOR CH 1/16W 390K | 1 | |
| R658 | ERJ2RMJ331 | M.RESISTOR CH 1/16W 330 | 1 | |
| R2001,02 | ERJ2GEJ103 | M.RESISTOR CH 1/16W 10K | 2 | |
| R2003 | ERJ2GE0R00 | M.RESISTOR CH 1/16W 0 | 1 | |
| R2004,05 | ERJ2GEJ103 | M.RESISTOR CH 1/16W 10K | 2 | |
| R2006 | ERJ2GEJ472 | M.RESISTOR CH 1/16W 4.7K | 1 | |
| R2008 | ERJ2GEJ473 | M.RESISTOR CH 1/16W 47K | 1 | |
| R2009 | ERJ2GE0R00 | M.RESISTOR CH 1/16W 0 | 1 | |
| R2010 | ERJ2GEJ104 | M.RESISTOR CH 1/16W 100K | 1 | |
| R2011 | ERJ2GEJ473 | M.RESISTOR CH 1/16W 47K | 1 | |
| R2012 | ERJ2GEJ152 | M.RESISTOR CH 1/16W 1.5K | 1 | |
| R2013 | ERJ2GEJ223 | M.RESISTOR CH 1/16W 22K | 1 | |
| R2014 | ERJ2GEJ273 | M.RESISTOR CH 1/16W 27K | 1 | |
| R2016,17 | ERJ2GEJ473 | M.RESISTOR CH 1/16W 47K | 2 | |
| R2019 | ERJ2RHD223 | M.RESISTOR CH 1/16W 22K | 1 | |
| R2021 | ERJ3GEY0R00 | M.RESISTOR CH 1/16W 0 | 1 | |
| R2022-24 | ERJ2GEJ101 | M.RESISTOR CH 1/16W 100 | 3 | |
| R2025 | ERJ2GEJ102 | M.RESISTOR CH 1/16W 1K | 1 | |
| R2026 | ERJ3GEY0R00 | M.RESISTOR CH 1/16W 0 | 1 | |
| R2027 | ERJ2GEJ473 | M.RESISTOR CH 1/16W 47K | 1 | |
| R2029 | ERJ2GEJ473 | M.RESISTOR CH 1/16W 47K | 1 | |
| R2030 | ERJ2GEJ273 | M.RESISTOR CH 1/16W 27K | 1 | |
| R2031 | ERJ2GEJ152 | M.RESISTOR CH 1/16W 1.5K | 1 | |
| R2032 | ERJ2GEJ331 | M.RESISTOR CH 1/16W 330 | 1 | |
| R2033 | ERJ2GEJ102 | M.RESISTOR CH 1/16W 1K | 1 | |
| R2034 | ERJ2GEJ473 | M.RESISTOR CH 1/16W 47K | 1 | |
| R2036 | ERJ3GEY0R00 | M.RESISTOR CH 1/16W 0 | 1 | |
| R2037 | ERJ2GEJ103 | M.RESISTOR CH 1/16W 10K | 1 | |
| R2039 | ERJ2GEJ471 | M.RESISTOR CH 1/16W 470 | 1 | |
| R2040 | ERJ8GEYG680 | M.RESISTOR CH 1/8W 68 | 1 | |
| R2041 | ERJ2GEJ102 | M.RESISTOR CH 1/16W 1K | 1 | |
| R2042 | ERJ3GEY0R00 | M.RESISTOR CH 1/16W 0 | 1 | |
| R2045 | ERJ2GE0R00 | M.RESISTOR CH 1/16W 0 | 1 | |
| R2047,48 | ERJ2GEJ473 | M.RESISTOR CH 1/16W 47K | 2 | |
| R2050 | ERJ2GEJ105 | M.RESISTOR CH 1/16W 1M | 1 | |
| R2051 | ERJ2GEJ102 | M.RESISTOR CH 1/16W 1K | 1 | |
| R2052 | ERJ2GEJ473 | M.RESISTOR CH 1/16W 47K | 1 | |
| R2054 | ERJ2GEJ103 | M.RESISTOR CH 1/16W 10K | 1 | |
| R2055 | ERJ2GEJ223 | M.RESISTOR CH 1/16W 22K | 1 | |
| R2057 | ERJ2GEJ102 | M.RESISTOR CH 1/16W 1K | 1 | |
| R2060 | ERJ2GEJ103 | M.RESISTOR CH 1/16W 10K | 1 | |
| R2061 | ERJ2GEJ473 | M.RESISTOR CH 1/16W 47K | 1 | |
| R2065 | ERJ2GEJ821 | M.RESISTOR CH 1/16W 820 | 1 | |
| R2066 | ERJ2GEJ103 | M.RESISTOR CH 1/16W 10K | 1 | |
| R2067 | ERJ2GEJ394 | M.RESISTOR CH 1/16W 390K | 1 | |
| R2068 | ERJ2GEJ271 | M.RESISTOR CH 1/16W 270 | 1 | |
| R2069 | ERJ2GEJ102 | M.RESISTOR CH 1/16W 1K | 1 | |
| R2074 | ERJ2GEJ102 | M.RESISTOR CH 1/16W 1K | 1 | |
| R2075 | ERJ2GEJ473 | M.RESISTOR CH 1/16W 47K | 1 | |
| R2078 | ERJ2GEJ473 | M.RESISTOR CH 1/16W 47K | 1 | |
| R2080 | ERJ2GEJ223 | M.RESISTOR CH 1/16W 22K | 1 | |
| R2082 | ERJ2GEJ563 | M.RESISTOR CH 1/16W 56K | 1 | |
| R2083 | ERJ2GEJ393 | M.RESISTOR CH 1/16W 39K | 1 | |
| R2089 | ERJ2GEJ473 | M.RESISTOR CH 1/16W 47K | 1 | |
| R2091 | ERJ2GEJ103 | M.RESISTOR CH 1/16W 10K | 1 | |
| R2092 | ERJ2GEJ332 | M.RESISTOR CH 1/16W 3.3K | 1 | |
| R2093 | ERJ2GEJ102 | M.RESISTOR CH 1/16W 1K | 1 | |
| R2094 | ERJ2GEJ472 | M.RESISTOR CH 1/16W 4.7K | 1 | |
| R2095 | ERJ2GE0R00 | M.RESISTOR CH 1/16W 0 | 1 | |
| R2096 | ERJ2RHD223 | M.RESISTOR CH 1/16W 22K | 1 | |
| R2097 | ERJ2GEJ392 | M.RESISTOR CH 1/16W 3.9K | 1 | |
| R2099,00 | ERJ2GE0R00 | M.RESISTOR CH 1/16W 0 | 2 | |
| R2101 | ERJ2GEJ102 | M.RESISTOR CH 1/16W 1K | 1 | |

Components identified with the mark ⚠ have special characteristics for safety.
When replacing any of these component, use only the same type.

| Ref.No. | Part No. | Part Name & Description | Pcs | Remarks |
|---|---|---|---|---|
| R2104 | ERJ2GEJ103 | M.RESISTOR CH 1/16W 10K | 1 | |
| R2105 | ERJ2GEJ473 | M.RESISTOR CH 1/16W 47K | 1 | |
| R2111 | ERJ2GE0R00 | M.RESISTOR CH 1/16W 0 | 1 | |
| R2114,15 | ERJ2GEJ103 | M.RESISTOR CH 1/16W 10K | 2 | |
| R2116 | ERJ2GEJ105 | M.RESISTOR CH 1/16W 1M | 1 | |
| R2117 | ERJ2GEJ222 | M.RESISTOR CH 1/16W 2.2K | 1 | |
| R2118,19 | ERJ2GEJ103 | M.RESISTOR CH 1/16W 10K | 2 | |
| R2120 | ERJ2GE0R00 | M.RESISTOR CH 1/16W 0 | 1 | |
| R2122 | ERJ2GEJ102 | M.RESISTOR CH 1/16W 1K | 1 | |
| R2126,27 | ERJ2GEJ331 | M.RESISTOR CH 1/16W 330 | 2 | |
| R2128 | ERJ2GEJ104 | M.RESISTOR CH 1/16W 100K | 1 | |
| R2129 | ERJ2RHD273 | M.RESISTOR CH 1/16W 27K | 1 | |
| R2130 | ERJ2GEJ104 | M.RESISTOR CH 1/16W 100K | 1 | |
| R2131 | ERJ2GEJ473 | M.RESISTOR CH 1/16W 47K | 1 | |
| R2132 | ERJ2RHD103 | M.RESISTOR CH 1/16W 10K | 1 | |
| R2133 | ERJ2RHD273 | M.RESISTOR CH 1/16W 27K | 1 | |
| R2136,37 | ERJ2RHD273 | M.RESISTOR CH 1/16W 27K | 2 | |
| R2138 | ERJ2RHD103 | M.RESISTOR CH 1/16W 10K | 1 | |
| R2139 | ERJ2GEJ332 | M.RESISTOR CH 1/16W 3.3K | 1 | |
| R2140 | ERJ2GEJ102 | M.RESISTOR CH 1/16W 1K | 1 | |
| R2141 | ERJ2GEJ473 | M.RESISTOR CH 1/16W 47K | 1 | |
| R2142 | ERJ2GEJ472 | M.RESISTOR CH 1/16W 4.7K | 1 | |
| R2143 | ERJ2GEJ104 | M.RESISTOR CH 1/16W 100K | 1 | |
| R2144 | ERJ2GEJ183 | M.RESISTOR CH 1/16W 18K | 1 | |
| R2146 | ERJ2GEJ152 | M.RESISTOR CH 1/16W 1.5K | 1 | |
| R2151 | ERJ2GEJ222 | M.RESISTOR CH 1/16W 2.2K | 1 | |
| R2153 | ERJ2GEJ152 | M.RESISTOR CH 1/16W 1.5K | 1 | |
| R2155 | ERJ2GEJ102 | M.RESISTOR CH 1/16W 1K | 1 | |
| R2161 | ERJ2GEJ223 | M.RESISTOR CH 1/16W 22K | 1 | |
| R2163 | ERJ2GEJ682 | M.RESISTOR CH 1/16W 6.8K | 1 | |
| R2170 | ERJ2GEJ822 | M.RESISTOR CH 1/16W 8.2K | 1 | |
| R2177 | ERJ2GEJ104 | M.RESISTOR CH 1/16W 100K | 1 | |
| R2189 | ERJ2GE0R00 | M.RESISTOR CH 1/16W 0 | 1 | |
| R2195 | ERJ2GEJ332 | M.RESISTOR CH 1/16W 3.3K | 1 | |
| R2199 | ERJ2GEJ101 | M.RESISTOR CH 1/16W 100 | 1 | |
| R2201 | ERJ2GEJ101 | M.RESISTOR CH 1/16W 100 | 1 | |
| R2202 | ERJ2GEJ473 | M.RESISTOR CH 1/16W 47K | 1 | |
| R2203 | ERJ2GEJ823 | M.RESISTOR CH 1/16W 82K | 1 | |
| R2204 | ERJ2GEJ104 | M.RESISTOR CH 1/16W 100K | 1 | |
| R2205,06 | ERJ2GEJ102 | M.RESISTOR CH 1/16W 1K | 2 | |
| R2207 | ERJ2GEJ103 | M.RESISTOR CH 1/16W 10K | 1 | |
| R2210 | ERJ2GEJ222 | M.RESISTOR CH 1/16W 2.2K | 1 | |
| R2211 | ERJ8RQJR27 | M.RESISTOR CH 1/8W 0.27 | 1 | |
| R2212 | ERJ2GEJ122 | M.RESISTOR CH 1/16W 1.2K | 1 | |
| R2213 | ERJ8RQJR27 | M.RESISTOR CH 1/8W 0.27 | 1 | |
| R2214 | ERJ2GEJ273 | M.RESISTOR CH 1/16W 27K | 1 | |
| R2217 | ERJ2GEJ223 | M.RESISTOR CH 1/16W 22K | 1 | |
| R2218 | ERJ2GEJ103 | M.RESISTOR CH 1/16W 10K | 1 | |
| R2219 | ERJ2RHD273 | M.RESISTOR CH 1/16W 27K | 1 | |
| R2220 | ERJ2GEJ102 | M.RESISTOR CH 1/16W 1K | 1 | |
| R2222 | ERJ2GEJ102 | M.RESISTOR CH 1/16W 1K | 1 | |
| R2226 | ERJ8GEYJR68 | M.RESISTOR CH 1/8W 0.68 | 1 | |
| R2227 | EXB24V102J | COMBI.R-R 1K | 1 | |
| R2647 | ERJ2GEJ102 | M.RESISTOR CH 1/16W 1K | 1 | |
| R2649-51 | EXB24V473J | COMBI.R-R 47K | 3 | |
| R2653,54 | EXB24V473J | COMBI.R-R 47K | 2 | |
| R2655-61 | EXB24V102J | COMBI.R-R 1K | 7 | |
| R2662 | EXB24V473J | COMBI.R-R 47K | 1 | |
| R2663-66 | EXB24V102J | COMBI.R-R 1K | 4 | |
| R2667 | ERJ2GEJ473 | M.RESISTOR CH 1/16W 47K | 1 | |
| R2668 | ERJ2GEJ102 | M.RESISTOR CH 1/16W 1K | 1 | |
| R2669 | EXB24V473J | COMBI.R-R 47K | 1 | |
| R2671,72 | ERJ2GEJ103 | M.RESISTOR CH 1/16W 10K | 2 | |
| R3001 | ERJ2GEJ100 | M.RESISTOR CH 1/16W 10 | 1 | |
| R3002 | ERJ2GEJ104 | M.RESISTOR CH 1/16W 100K | 1 | |
| R3003,04 | ERJ2GE0R00 | M.RESISTOR CH 1/16W 0 | 2 | |
| R3005 | ERJ2GEJ223 | M.RESISTOR CH 1/16W 22K | 1 | |
| R3006 | ERJ2GEJ153 | M.RESISTOR CH 1/16W 15K | 1 | |
| R3007 | ERJ2GEJ103 | M.RESISTOR CH 1/16W 10K | 1 | |
| R3008 | ERJ2GE0R00 | M.RESISTOR CH 1/16W 0 | 1 | |
| R3010,11 | ERJ2GEJ473 | M.RESISTOR CH 1/16W 47K | 2 | |
| R3015 | ERJ2GEJ273 | M.RESISTOR CH 1/16W 27K | 1 | |
| R3021 | ERJ2GEJ183 | M.RESISTOR CH 1/16W 18K | 1 | |
| R3022-25 | ERJ2GEJ103 | M.RESISTOR CH 1/16W 10K | 4 | |
| R3026 | ERJ2GEJ153 | M.RESISTOR CH 1/16W 15K | 1 | |

| Ref.No. | Part No. | Part Name & Description | Pcs | Remarks |
|---|---|---|---|---|
| R3030,31 | ERJ2GE0R00 | M.RESISTOR CH 1/16W 0 | 2 | |
| R3035 | ERJ2GEJ223 | M.RESISTOR CH 1/16W 22K | 1 | |
| R3037 | ERJ2GEJ273 | M.RESISTOR CH 1/16W 27K | 1 | |
| R3041 | ERJ2GEJ103 | M.RESISTOR CH 1/16W 10K | 1 | |
| R3101 | ERJ2GEJ221 | M.RESISTOR CH 1/16W 220 | 1 | |
| R3103 | ERJ2GEJ391 | M.RESISTOR CH 1/16W 390 | 1 | |
| R3105 | ERJ2GEJ102 | M.RESISTOR CH 1/16W 1K | 1 | |
| R3107 | ERJ2GEJ100 | M.RESISTOR CH 1/16W 10 | 1 | |
| R3108 | ERJ2GEJ472 | M.RESISTOR CH 1/16W 4.7K | 1 | |
| R3109 | ERJ2GEJ100 | M.RESISTOR CH 1/16W 10 | 1 | |
| R3110 | ERJ2GEJ182 | M.RESISTOR CH 1/16W 1.8K | 1 | |
| R3111 | ERJ2GEJ391 | M.RESISTOR CH 1/16W 390 | 1 | |
| R3112 | ERJ2GEJ103 | M.RESISTOR CH 1/16W 10K | 1 | |
| R3113 | ERJ2GEJ394 | M.RESISTOR CH 1/16W 390K | 1 | |
| R3115 | ERJ2GEJ102 | M.RESISTOR CH 1/16W 1K | 1 | |
| R3116 | ERJ2GEJ182 | M.RESISTOR CH 1/16W 1.8K | 1 | |
| R3118,19 | ERJ2GEJ101 | M.RESISTOR CH 1/16W 100 | 2 | |
| R3120 | ERJ2GEJ102 | M.RESISTOR CH 1/16W 1K | 1 | |
| R3122 | ERJ2GEJ102 | M.RESISTOR CH 1/16W 1K | 1 | |
| R3124 | ERJ2GEJ472 | M.RESISTOR CH 1/16W 4.7K | 1 | |
| R3125 | ERJ2GEJ102 | M.RESISTOR CH 1/16W 1K | 1 | |
| R3126,27 | ERJ2GEJ103 | M.RESISTOR CH 1/16W 10K | 2 | |
| R3128 | ERJ2RMJ473 | M.RESISTOR CH 1/16W 47K | 1 | |
| R3129 | ERJ2GEJ680 | M.RESISTOR CH 1/16W 68 | 1 | |
| R3131 | ERJ2GEJ750 | M.RESISTOR CH 1/16W 75 | 1 | |
| R3132 | ERJ2GEJ680 | M.RESISTOR CH 1/16W 68 | 1 | |
| R3135 | ERJ2GEJ473 | M.RESISTOR CH 1/16W 47K | 1 | |
| R3138 | ERJ2GEJ392 | M.RESISTOR CH 1/16W 3.9K | 1 | |
| R3139 | ERJ2GEJ473 | M.RESISTOR CH 1/16W 47K | 1 | |
| R3140,41 | ERJ2GEJ224 | M.RESISTOR CH 1/16W 220K | 2 | |
| R3156,57 | ERJ6GEY0R00 | M.RESISTOR CH 1/10W 0 | 2 | D0YDR0000005 |
| R3158,59 | EXB24V473J | COMBI.R-R 47K | 2 | |
| R3170 | EXB24V102J | COMBI.R-R 1K | 1 | |
| R3171 | ERJ2GE0R00 | M.RESISTOR CH 1/16W 0 | 1 | |
| R3176 | ERJ2GEJ473 | M.RESISTOR CH 1/16W 47K | 1 | |
| R3177 | ERJ2GEJ104 | M.RESISTOR CH 1/16W 100K | 1 | |
| R3178 | ERJ2GEJ473 | M.RESISTOR CH 1/16W 47K | 1 | |
| R3179,80 | ERJ2GEJ102 | M.RESISTOR CH 1/16W 1K | 2 | |
| R3181,82 | ERJ2GE0R00 | M.RESISTOR CH 1/16W 0 | 2 | |
| R3201 | ERJ2RHD182 | M.RESISTOR CH 1/16W 1.8K | 1 | |
| R3202 | ERJ2GEJ271 | M.RESISTOR CH 1/16W 270 | 1 | |
| R3203 | ERJ2GEJ221 | M.RESISTOR CH 1/16W 220 | 1 | |
| R3204 | ERJ2GEJ272 | M.RESISTOR CH 1/16W 2.7K | 1 | |
| R3205 | ERJ2GEJ221 | M.RESISTOR CH 1/16W 220 | 1 | |
| R3206 | ERJ2GEJ222 | M.RESISTOR CH 1/16W 2.2K | 1 | |
| R3207 | ERJ2GEJ332 | M.RESISTOR CH 1/16W 3.3K | 1 | |
| R3208,09 | ERJ2GEJ103 | M.RESISTOR CH 1/16W 10K | 2 | |
| R3210 | ERJ2GEJ1R0 | M.RESISTOR CH 1/16W 1 | 1 | |
| R3211,12 | ERJ2GEJ102 | M.RESISTOR CH 1/16W 1K | 2 | |
| R3234 | ERJ2GEJ472 | M.RESISTOR CH 1/16W 4.7K | 1 | |
| R3236 | ERJ2GE0R00 | M.RESISTOR CH 1/16W 0 | 1 | |
| R3251-54 | ERJ2RKD560 | M.RESISTOR CH 1/16W 56 | 4 | |
| R3255,56 | ERJ2GEJ103 | M.RESISTOR CH 1/16W 10K | 2 | |
| R3257 | ERJ2RHD622 | M.RESISTOR CH 1/16W 6.2K | 1 | |
| R3258 | ERJ2RHD181 | M.RESISTOR CH 1/16W 180 | 1 | |
| R3259 | ERJ2GEJ473 | M.RESISTOR CH 1/16W 47K | 1 | |
| R3260 | ERJ2GEJ100 | M.RESISTOR CH 1/16W 10 | 1 | |
| R3501 | ERJ2GEJ102 | M.RESISTOR CH 1/16W 1K | 1 | |
| R3503 | ERJ2RHD332 | M.RESISTOR CH 1/16W 3.3K | 1 | |
| R3504 | ERJ2RHD181 | M.RESISTOR CH 1/16W 180 | 1 | |
| R3505,06 | ERJ2RHD102 | M.RESISTOR CH 1/16W 1K | 2 | |
| R3507 | ERJ2RHD392 | M.RESISTOR CH 1/16W 3.9K | 1 | |
| R3514 | ERJ2GEJ223 | M.RESISTOR CH 1/16W 22K | 1 | |
| R3515 | ERJ2GEJ331 | M.RESISTOR CH 1/16W 330 | 1 | |
| R3516 | ERJ2GEJ103 | M.RESISTOR CH 1/16W 10K | 1 | |
| R3549 | ERJ2GEJ272 | M.RESISTOR CH 1/16W 2.7K | 1 | |
| R3550 | ERJ2GEJ152 | M.RESISTOR CH 1/16W 1.5K | 1 | |
| R3551 | ERJ2GEJ473 | M.RESISTOR CH 1/16W 47K | 1 | |
| R3552 | ERJ2GEJ472 | M.RESISTOR CH 1/16W 4.7K | 1 | |
| R3553 | ERJ2GEJ102 | M.RESISTOR CH 1/16W 1K | 1 | |
| R3554 | ERJ2GEJ182 | M.RESISTOR CH 1/16W 1.8K | 1 | |
| R3555 | ERJ2GEJ152 | M.RESISTOR CH 1/16W 1.5K | 1 | |
| R3556 | ERJ2GEJ103 | M.RESISTOR CH 1/16W 10K | 1 | |
| R3557,58 | ERJ2GEJ333 | M.RESISTOR CH 1/16W 33K | 2 | |
| R3560 | ERJ2GEJ222 | M.RESISTOR CH 1/16W 2.2K | 1 | |

Components identified with the mark ⚠ have special characteristics for safety.
When replacing any of these component, use only the same type.

| Ref.No. | Part No. | Part Name & Description | Pcs | Remarks |
|---|---|---|---|---|
| R3561,62 | ERJ2GEJ102 | M.RESISTOR CH 1/16W 1K | 2 | |
| R3563 | ERJ2GEJ222 | M.RESISTOR CH 1/16W 2.2K | 1 | |
| R3564 | ERJ2GEJ563 | M.RESISTOR CH 1/16W 56K | 1 | |
| R3565 | ERJ2GEJ473 | M.RESISTOR CH 1/16W 47K | 1 | |
| R3568 | ERJ2GEJ183 | M.RESISTOR CH 1/16W 18K | 1 | |
| R3570 | ERJ2GE0R00 | M.RESISTOR CH 1/16W 0 | 1 | |
| R3572 | ERJ2GE0R00 | M.RESISTOR CH 1/16W 0 | 1 | |
| R3580 | ERJ2GEJ473 | M.RESISTOR CH 1/16W 47K | 1 | |
| R4000-03 | ERJ2GEJ223 | M.RESISTOR CH 1/16W 22K | 4 | |
| R4004,05 | ERJ2GEJ332 | M.RESISTOR CH 1/16W 3.3K | 2 | |
| R4006-09 | ERJ2GEJ472 | M.RESISTOR CH 1/16W 4.7K | 4 | |
| R4010,11 | ERJ2GEJ104 | M.RESISTOR CH 1/16W 100K | 2 | |
| R4012,13 | ERJ2GEJ472 | M.RESISTOR CH 1/16W 4.7K | 2 | |
| R4014,15 | ERJ2GEJ183 | M.RESISTOR CH 1/16W 18K | 2 | |
| R4016,17 | ERJ3RBD133 | M.RESISTOR CH 1/16W 13K | 2 | |
| R4018-21 | ERJ2RHD223 | M.RESISTOR CH 1/16W 22K | 4 | |
| R4022,23 | ERJ3RBD623 | M.RESISTOR CH 1/16W 62K | 2 | |
| R4024,25 | ERJ2GEJ332 | M.RESISTOR CH 1/16W 3.3K | 2 | |
| R4032 | ERJ2GEJ333 | M.RESISTOR CH 1/16W 33K | 1 | |
| R4033 | ERJ2GEJ223 | M.RESISTOR CH 1/16W 22K | 1 | |
| R4034,35 | ERJ2RHD223 | M.RESISTOR CH 1/16W 22K | 2 | |
| R4036 | EXB24V473J | COMBI.R-R 47K | 1 | |
| R4037 | ERJ2GEJ472 | M.RESISTOR CH 1/16W 4.7K | 1 | |
| R4038,39 | ERJ2RHD223 | M.RESISTOR CH 1/16W 22K | 2 | |
| R4042,43 | ERJ2RHD153 | M.RESISTOR CH 1/16W 15K | 2 | |
| R4044,45 | ERJ2RHD273 | M.RESISTOR CH 1/16W 27K | 2 | |
| R4046-49 | ERJ2RHD223 | M.RESISTOR CH 1/16W 22K | 4 | |
| R4050,51 | ERJ2GE0R00 | M.RESISTOR CH 1/16W 0 | 2 | |
| R4052 | EXB24V473J | COMBI.R-R 47K | 1 | |
| R5004 | ERJ2GEJ182 | M.RESISTOR CH 1/16W 1.8K | 1 | |
| R5006 | ERJ2GEJ222 | M.RESISTOR CH 1/16W 2.2K | 1 | |
| R5009-12 | ERJ2GEJ103 | M.RESISTOR CH 1/16W 10K | 4 | |
| R5013,14 | ERJ2GE0R00 | M.RESISTOR CH 1/16W 0 | 2 | |
| R5015 | ERJ2GEJ102 | M.RESISTOR CH 1/16W 1K | 1 | |
| R6901,02 | ERJ2GEJ330 | M.RESISTOR CH 1/16W 33 | 2 | |
| R9007 | ERJ3GEY0R00 | M.RESISTOR CH 1/16W 0 | 1 | |
| R9010,11 | ERJ3GEY0R00 | M.RESISTOR CH 1/16W 0 | 2 | |
| R9014 | ERJ3GEY0R00 | M.RESISTOR CH 1/16W 0 | 1 | |
| R9023 | ERJ3GEY0R00 | M.RESISTOR CH 1/16W 0 | 1 | |
| R9029 | ERJ6GEYG330 | M.RESISTOR CH 1/10W 33 | 1 | |
| R9031 | ERJ3GEY0R00 | M.RESISTOR CH 1/16W 0 | 1 | |
| | | | | |
| TP9001 | EYF6CU | TEST POINT | 1 | |
| | | | | |
| X2002 | H0J327200051 | CRYSTAL OSCILLATOR | 1 | |
| X2003 | H0J270500024 | CRYSTAL OSCILLATOR | 1 | |
| | | | | |
| | | MISCELLANEOUS | | |
| | | | | |
| | EYF6CU | TEST POINT | 2 | |
| | | | | |
| | | | | |
| | | | | |
| | | | | |
| | | | | |
| ■ E3 | VEP23598A | CAMERA C.B.A. | 1 | (RTL) |
| | | | | |
| | | | | |
| C100 | ECST1AY106Z | T.CAPACITOR CH 10V 10U | 1 | |
| C101 | ECJ0EB1A104K | C.CAPACITOR CH 10V 0.1U | 1 | |
| C102-07 | ECST1AY106Z | T.CAPACITOR CH 10V 10U | 6 | |
| C112-14 | ECST1VY684Z | T.CAPACITOR CH 35V 0.68U | 3 | |
| C115-17 | ECST1EY155 | T.CAPACITOR CH 25V 1.5U | 3 | |
| C121-26 | ECJ0EB1A104K | C.CAPACITOR CH 10V 0.1U | 6 | |
| C127 | ECUX1E471KBQ | C.CAPACITOR CH 25V 470P | 1 | |
| C128 | ECJ0EB1A104K | C.CAPACITOR CH 10V 0.1U | 1 | |
| C129,30 | ECUX1E471KBQ | C.CAPACITOR CH 25V 470P | 2 | |
| C131 | ECJ0EB1A104K | C.CAPACITOR CH 10V 0.1U | 1 | |
| C132,33 | ECUX1E471KBQ | C.CAPACITOR CH 25V 470P | 2 | |
| C134 | ECJ0EB1A104K | C.CAPACITOR CH 10V 0.1U | 1 | |
| C135 | ECUX1E471KBQ | C.CAPACITOR CH 25V 470P | 1 | |
| C136-38 | ECJ0EB1A104K | C.CAPACITOR CH 10V 0.1U | 3 | |
| C139-44 | ECUX1A105KBV | C.CAPACITOR CH 10V 1U | 6 | |
| C145-50 | ECJ0EB1A104K | C.CAPACITOR CH 10V 0.1U | 6 | |
| C152-54 | ECJ0EB1A104K | C.CAPACITOR CH 10V 0.1U | 3 | |
| | | | | |
| | | | | |

| Ref.No. | Part No. | Part Name & Description | Pcs | Remarks |
|---|---|---|---|---|
| C155-57 | ECST1AY106Z | T.CAPACITOR CH 10V 10U | 3 | |
| C701 | ECUX1A105KBV | C.CAPACITOR CH 10V 1U | 1 | |
| C702 | ECJ0EB1E102K | C.CAPACITOR CH 25V 1000P | 1 | |
| C703 | F1G1C822A040 | C.CAPACITOR CH 16V 8200P | 1 | |
| C704 | ECJ0EB1E222K | C.CAPACITOR CH 25V 2200P | 1 | |
| C705 | ECJ0EC1H390J | C.CAPACITOR CH 50V 39P | 1 | |
| C706,07 | ECJ0EB1C103K | C.CAPACITOR CH 16V 0.01U | 2 | |
| C708 | ECJ0EB1E272K | C.CAPACITOR CH 25V 2700P | 1 | |
| C709 | ECJ0EB1E222K | C.CAPACITOR CH 25V 2200P | 1 | |
| C710 | ECJ0EB1E472K | C.CAPACITOR CH 25V 4700P | 1 | |
| C711,12 | ECJ0EB1C103K | C.CAPACITOR CH 16V 0.01U | 2 | |
| C713 | ECUX1E471KBQ | C.CAPACITOR CH 25V 470P | 1 | |
| C714 | F3G1A4760002 | T.CAPACITOR CH 10V 47U | 1 | |
| C715 | ECJ0EB1A104K | C.CAPACITOR CH 10V 0.1U | 1 | |
| C716 | ECJ0EB1E102K | C.CAPACITOR CH 25V 1000P | 1 | |
| C717 | ECUM1E224KBN | C.CAPACITOR CH 25V 0.22U | 1 | |
| C718 | ECJ0EC1H151J | C.CAPACITOR CH 50V 150P | 1 | |
| C719 | ECUX1A224KBV | C.CAPACITOR CH 10V 0.22U | 1 | |
| C720 | ECUX1A105KBV | C.CAPACITOR CH 10V 1U | 1 | |
| C721 | ECUX1A105KBN | C.CAPACITOR CH 10V 1U | 1 | |
| C722,23 | ECUX1A105KBV | C.CAPACITOR CH 10V 1U | 2 | |
| C724 | F3F1D4750002 | T.CAPACITOR CH 20V 4.7U | 1 | |
| C725 | ECJ0EB1A104K | C.CAPACITOR CH 10V 0.1U | 1 | |
| C727,28 | ECJ0EB1A104K | C.CAPACITOR CH 10V 0.1U | 2 | |
| C729 | ECJ0EB1A473K | C.CAPACITOR CH 10V 0.047U | 1 | |
| C730 | F1G1E392A056 | C.CAPACITOR CH 25V 3900P | 1 | |
| C734 | ECUX1E471KBQ | C.CAPACITOR CH 25V 470P | 1 | |
| C735 | ECJ0EB1C103K | C.CAPACITOR CH 16V 0.01U | 1 | |
| C737 | ECJ0EB1E472K | C.CAPACITOR CH 25V 4700P | 1 | |
| C738 | ECJ0EB1C103K | C.CAPACITOR CH 16V 0.01U | 1 | |
| C744 | ECUX1A105KBV | C.CAPACITOR CH 10V 1U | 1 | |
| C745 | F3G1A4760002 | T.CAPACITOR CH 10V 47U | 1 | |
| C746 | ECUX1A105KBV | C.CAPACITOR CH 10V 1U | 1 | |
| C747 | ECJ0EB1C103K | C.CAPACITOR CH 16V 0.01U | 1 | |
| C748 | ECUX1A105KBV | C.CAPACITOR CH 10V 1U | 1 | |
| C750 | ECJ0EB1E472K | C.CAPACITOR CH 25V 4700P | 1 | |
| C751 | ECUX1E471KBQ | C.CAPACITOR CH 25V 470P | 1 | |
| C752 | F1G1E392A056 | C.CAPACITOR CH 25V 3900P | 1 | |
| C753 | ECJ0EB1C103K | C.CAPACITOR CH 16V 0.01U | 1 | |
| C754 | ECJ0EB1A104K | C.CAPACITOR CH 10V 0.1U | 1 | |
| C755 | ECJ0EB1A473K | C.CAPACITOR CH 10V 0.047U | 1 | |
| C757-59 | ECJ0EB1A104K | C.CAPACITOR CH 10V 0.1U | 3 | |
| C763 | ECUX1A105KBV | C.CAPACITOR CH 10V 1U | 1 | |
| C776 | F3F1D4750002 | T.CAPACITOR CH 20V 4.7U | 1 | |
| C777 | ECJ0EB1A104K | C.CAPACITOR CH 10V 0.1U | 1 | |
| C779 | ECUX1A105KBN | C.CAPACITOR CH 10V 1U | 1 | |
| C780 | F3F1C1060002 | T.CAPACITOR CH 16V 10U | 1 | |
| C781 | ECJ0EB1A104K | C.CAPACITOR CH 10V 0.1U | 1 | |
| C782 | F3F1C1060002 | T.CAPACITOR CH 16V 10U | 1 | |
| C783 | ECJ0EB1A104K | C.CAPACITOR CH 10V 0.1U | 1 | |
| C784 | F3F1C1060002 | T.CAPACITOR CH 16V 10U | 1 | |
| C785 | F3G1A4760002 | T.CAPACITOR CH 10V 47U | 1 | |
| C786-88 | ECUX1C104KBV | C.CAPACITOR CH 16V 0.1U | 3 | |
| C789 | ECUX1C105KBN | C.CAPACITOR CH 10V 1U | 1 | |
| C790 | ECJ0EB1C103K | C.CAPACITOR CH 16V 0.01U | 1 | |
| C791 | ECUX1C104KBV | C.CAPACITOR CH 16V 0.1U | 1 | |
| C794 | ECJ0EB1A104K | C.CAPACITOR CH 10V 0.1U | 1 | |
| C796 | ECUX1C274KBN | C.CAPACITOR CH 16V 0.27U | 1 | |
| C797 | ECJ0EB1C103K | C.CAPACITOR CH 16V 0.01U | 1 | |
| C798 | ECJ0EB1A104K | C.CAPACITOR CH 10V 0.1U | 1 | |
| C805 | F3E0J106A005 | T.CAPACITOR CH6.3V 10U | 1 | |
| C807 | F3E0J106A005 | T.CAPACITOR CH6.3V 10U | 1 | |
| C813 | ECUX1A105KBV | C.CAPACITOR CH 10V 1U | 1 | |
| C900 | ECUX1A105KBV | C.CAPACITOR CH 10V 1U | 1 | |
| C901 | F3E0J106A005 | T.CAPACITOR CH6.3V 10U | 1 | |
| C902 | ECJ0EB1A104K | C.CAPACITOR CH 10V 0.1U | 1 | |
| C903 | ECUX1A105KBV | C.CAPACITOR CH 10V 1U | 1 | |
| C927 | ECJ0EB1E102K | C.CAPACITOR CH 25V 1000P | 1 | |
| C928 | ECJ0EB1E472K | C.CAPACITOR CH 25V 4700P | 1 | |
| C929 | ECJ0EB1C103K | C.CAPACITOR CH 16V 0.01U | 1 | |
| C930 | ECUX1A105KBV | C.CAPACITOR CH 10V 1U | 1 | |
| C932 | ECJ0EB1A104K | C.CAPACITOR CH 10V 0.1U | 1 | |
| C933 | ECUX1A105KBV | C.CAPACITOR CH 10V 1U | 1 | |
| C934 | ECUX1A224KBV | C.CAPACITOR CH 10V 0.22U | 1 | |
| C935 | ECJ0EB1E102K | C.CAPACITOR CH 25V 1000P | 1 | |
| | | | | |
| | | | | |

Components identified with the mark ⚠ have special characteristics for safety.
When replacing any of these component, use only the same type.

| Ref.No. | Part No. | Part Name & Description | Pcs | Remarks |
|---|---|---|---|---|
| C936 | ECUX1A224KBV | C.CAPACITOR CH 10V 0.22U | 1 | |
| C937 | ECJ0EC1H151J | C.CAPACITOR CH 50V 150P | 1 | |
| C938 | ECJ0EB1A104K | C.CAPACITOR CH 10V 0.1U | 1 | |
| C940 | F3F1C1060002 | T.CAPACITOR CH 16V 10U | 1 | |
| C941 | ECUX1A105KBV | C.CAPACITOR CH 10V 1U | 1 | |
| C1000 | ECST1AY106Z | T.CAPACITOR CH 10V 10U | 1 | |
| C1001 | ECJ0EB1A104K | C.CAPACITOR CH 10V 0.1U | 1 | |
| C1002,03 | F3F1A226A001 | T.CAPACITOR CH 10V 22U | 2 | |
| C1004 | ECST1AY106Z | T.CAPACITOR CH 10V 10U | 1 | |
| C1010-12 | ECJ0EB1A104K | C.CAPACITOR CH 10V 0.1U | 3 | |
| C1017 | F3G1A4760002 | T.CAPACITOR CH 10V 47U | 1 | |
| C1018-23 | ECJ0EB1A104K | C.CAPACITOR CH 10V 0.1U | 6 | |
| C1027,28 | ECST1EX475 | T.CAPACITOR CH 25V 4.7U | 2 | |
| C1029 | ECJ0EF1C104Z | C.CAPACITOR CH 16V 0.1U | 1 | |
| C1030-33 | ECJ0EB1A104K | C.CAPACITOR CH 10V 0.1U | 4 | |
| C1035 | ECUX1E105KBM | C.CAPACITOR CH 25V 1U | 1 | |
| C1036-38 | ECJ0EB1A104K | C.CAPACITOR CH 10V 0.1U | 3 | |
| C1039 | ECST1AY106Z | T.CAPACITOR CH 10V 10U | 1 | |
| C1043 | ECJ0EB1A104K | C.CAPACITOR CH 10V 0.1U | 1 | |
| C1045 | F1H0J1050022 | C.CAPACITOR CH6.3V 1U | 1 | |
| C1046 | ECJ0EB1A104K | C.CAPACITOR CH 10V 0.1U | 1 | |
| C1048 | F3G1A4760002 | T.CAPACITOR CH 10V 47U | 1 | |
| C1049 | F1H0J1050022 | C.CAPACITOR CH6.3V 1U | 1 | |
| C1051,52 | F1H1H104A783 | C.CAPACITOR CH 50V 0.1U | 2 | |
| C1053 | F3G1A4760002 | T.CAPACITOR CH 10V 47U | 1 | |
| C1054 | F1H1H104A783 | C.CAPACITOR CH 50V 0.1U | 1 | |
| C1055 | F1K1H1050002 | C.CAPACITOR CH 50V 1U | 1 | |
| C1056-61 | ECJ0EB1A104K | C.CAPACITOR CH 10V 0.1U | 6 | |
| C1062,63 | F1L1E1060018 | C.CAPACITOR CH 25V 10U | 2 | |
| C1064,65 | ECJ0EC1H220J | C.CAPACITOR CH 50V 22P | 2 | |
| C1067 | F1L1E1060018 | C.CAPACITOR CH 25V 10U | 1 | |
| C1069,70 | ECJ0EB1A104K | C.CAPACITOR CH 10V 0.1U | 2 | |
| C1071 | F1L1E1060018 | C.CAPACITOR CH 25V 10U | 1 | |
| C1079 | ECJ0EB1A104K | C.CAPACITOR CH 10V 0.1U | 1 | |
| C1084 | ECJ0EB1A104K | C.CAPACITOR CH 10V 0.1U | 1 | |
| C1085 | ECUM1H103KBN | C.CAPACITOR CH 50V 0.01U | 1 | F1J1H103A010 |
| C1086-88 | ECJ0EB1A104K | C.CAPACITOR CH 10V 0.1U | 3 | |
| C1089 | ECJ0EC1H220J | C.CAPACITOR CH 50V 22P | 1 | |
| C1090-92 | ECJ0EB1A104K | C.CAPACITOR CH 10V 0.1U | 3 | |
| C1093 | ECST1AY106Z | T.CAPACITOR CH 10V 10U | 1 | |
| C1094 | ECJ0EB1A104K | C.CAPACITOR CH 10V 0.1U | 1 | |
| C1601 | ECUX1E105KBM | C.CAPACITOR CH 25V 1U | 1 | |
| C1602 | ECUX1A105KBV | C.CAPACITOR CH 10V 1U | 1 | |
| C1603 | ECUX1H472KBV | C.CAPACITOR CH 50V 4700P | 1 | |
| C1604 | ECUX1E105KBM | C.CAPACITOR CH 25V 1U | 1 | |
| C1605 | F1J0J475A008 | C.CAPACITOR CH6.3V 4.7U | 1 | |
| C1606 | ECUX1A105KBV | C.CAPACITOR CH 10V 1U | 1 | |
| C1651 | ECUX1A105KBV | C.CAPACITOR CH 10V 1U | 1 | |
| C1652 | ECUX1H472KBV | C.CAPACITOR CH 50V 4700P | 1 | |
| C1653 | ECUX1A105KBV | C.CAPACITOR CH 10V 1U | 1 | |
| C1655 | F1H1H104A783 | C.CAPACITOR CH 50V 0.1U | 1 | |
| C1656 | ECUX1A105KBV | C.CAPACITOR CH 10V 1U | 1 | |
| C1657 | ECJ0EB1E102K | C.CAPACITOR CH 25V 1000P | 1 | |
| C1660,61 | ECJ0EB1A104K | C.CAPACITOR CH 10V 0.1U | 2 | |
| C2000 | ECST1AY106Z | T.CAPACITOR CH 10V 10U | 1 | |
| C2001 | ECST0JY106R | T.CAPACITOR CH6.3V 10U | 1 | |
| C2003,04 | ECJ0EB1A104K | C.CAPACITOR CH 10V 0.1U | 2 | |
| C2006 | ECJ0EB1A104K | C.CAPACITOR CH 10V 0.1U | 1 | |
| C2007 | ECST0JY106R | T.CAPACITOR CH6.3V 10U | 1 | |
| C2008-10 | ECJ0EB1A104K | C.CAPACITOR CH 10V 0.1U | 3 | |
| C2011,12 | ECJ0EB1C153K | C.CAPACITOR CH 16V 0.015U | 2 | |
| C2013 | ECJ0EB1A104K | C.CAPACITOR CH 10V 0.1U | 1 | |
| C3000 | ECJ0EB1A104K | C.CAPACITOR CH 10V 0.1U | 1 | |
| C3001 | ECJ0EB1C103K | C.CAPACITOR CH 16V 0.01U | 1 | |
| C3002 | ECJ0EB1A104K | C.CAPACITOR CH 10V 0.1U | 1 | |
| C3003 | ECJ0EB1C103K | C.CAPACITOR CH 16V 0.01U | 1 | |
| C3004-06 | ECJ0EB1A104K | C.CAPACITOR CH 10V 0.1U | 3 | |
| C3007 | F1G1H5R00004 | C.CAPACITOR CH 50V 5P | 1 | |
| C3008 | F1G1H8R00003 | C.CAPACITOR CH 50V 8P | 1 | |
| C3009 | ECJ0EB1A104K | C.CAPACITOR CH 10V 0.1U | 1 | |
| C3014 | ECJ0EB1A104K | C.CAPACITOR CH 10V 0.1U | 1 | |
| C3020 | ECJ0EB1A104K | C.CAPACITOR CH 10V 0.1U | 1 | |
| C3021 | ECJ0EB1C153K | C.CAPACITOR CH 16V 0.015U | 1 | |
| C3022 | ECJ0EB1A104K | C.CAPACITOR CH 10V 0.1U | 1 | |
| C3023 | ECJ0EB1C153K | C.CAPACITOR CH 16V 0.015U | 1 | |

| Ref.No. | Part No. | Part Name & Description | Pcs | Remarks |
|---|---|---|---|---|
| C3024 | ECST1AY106Z | T.CAPACITOR CH 10V 10U | 1 | |
| C3025 | ECJ0EB1A104K | C.CAPACITOR CH 10V 0.1U | 1 | |
| C3026 | ECST1AY106Z | T.CAPACITOR CH 10V 10U | 1 | |
| C3027 | ECJ0EB1A104K | C.CAPACITOR CH 10V 0.1U | 1 | |
| C3029 | ECUX1A105KBV | C.CAPACITOR CH 10V 1U | 1 | |
| C3030 | ECJ0EB1A104K | C.CAPACITOR CH 10V 0.1U | 1 | |
| C3031 | ECST1AY106Z | T.CAPACITOR CH 10V 10U | 1 | |
| C3032 | ECJ0EB1A104K | C.CAPACITOR CH 10V 0.1U | 1 | |
| C3033 | ECST1AY106Z | T.CAPACITOR CH 10V 10U | 1 | |
| C3034 | ECJ0EB1A104K | C.CAPACITOR CH 10V 0.1U | 1 | |
| C4112 | ECJ0EB1A104K | C.CAPACITOR CH 10V 0.1U | 1 | |
| C4120 | ECJ1VB1H103K | C.CAPACITOR CH 50V 0.01U | 1 | |
| C4121 | ECUX1H222KBV | C.CAPACITOR CH 50V 2200P | 1 | |
| C4122 | ECJ1VB1H103K | C.CAPACITOR CH 50V 0.01U | 1 | |
| C4123 | ECUX1H222KBV | C.CAPACITOR CH 50V 2200P | 1 | |
| C4124 | ECJ0EB1A104K | C.CAPACITOR CH 10V 0.1U | 1 | |
| C4125 | F3G1C2260001 | T.CAPACITOR CH 16V 22U | 1 | |
| | | | | |
| D1001 | MA3S132A0L | DIODE | 1 | |
| D1601 | MA3S132E0L | DIODE | 1 | |
| D3000 | B0JCDD000002 | DIODE | 1 | |
| | | | | |
| IC1 | C0CBABC00094 | IC | 1 | |
| IC2 | NJM431U | IC | 1 | C0DBEZC00003 |
| IC104-06 | C1AB00001677 | IC | 3 | |
| IC701 | C0ABCA000053 | IC | 1 | |
| IC702 | C1AB00001159 | IC | 1 | |
| IC703 | C0CBAEC00006 | IC | 1 | |
| IC704 | C1AB00001262 | IC | 1 | |
| IC710 | C0GBG0000028 | IC | 1 | |
| IC711 | C0CBADC00034 | IC | 1 | |
| IC713 | C0CBADC00034 | IC | 1 | |
| IC717 | TC75W54FU | IC | 1 | |
| IC719 | C0CBADC00034 | IC | 1 | |
| IC927 | C0ABCA000053 | IC | 1 | |
| IC928 | C0ABAA000043 | IC | 1 | |
| IC929 | C0CBADC00034 | IC | 1 | |
| IC1000 | C1ZBZ0002385 | PLD | 1 | |
| IC1001 | C0JBAB000004 | IC | 1 | |
| IC1002 | C0JBAF000162 | IC | 1 | |
| IC1003 | C0JBAB000003 | IC | 1 | |
| IC1004-06 | TC7SH32FU | IC | 3 | |
| IC1007 | C0JBAE000140 | IC | 1 | |
| IC1008 | C0JBAA000102 | IC | 1 | |
| IC1010 | TC7SH04FU | IC | 1 | |
| IC1011 | C0JBAA000102 | IC | 1 | |
| IC1013 | C0JBAD000071 | IC | 1 | |
| IC1014 | TC7SH32FU | IC | 1 | |
| IC1015,16 | C0JBAB000543 | IC | 2 | |
| IC1022,23 | UPD16510GR | IC | 2 | |
| IC1024 | C0JBAA000182 | IC | 1 | |
| IC1025 | C0JBAE000140 | IC | 1 | |
| IC2000 | MN7GD02B5DB | IC | 1 | |
| IC2002 | TC7W74FU | IC | 1 | |
| IC2003 | C0JBAF000162 | IC | 1 | |
| IC3000 | TC7SH04FU | IC | 1 | |
| IC3001 | C0FBAF000029 | IC | 1 | |
| IC3002,03 | TC7SH14FU | IC | 2 | |
| IC3005 | C0JBAA000102 | IC | 1 | |
| IC3006 | C3EBHC000015 | IC | 1 | |
| IC3500 | MN103S33NSA | IC | 1 | |
| IC4105 | C0ABAA000046 | IC | 1 | |
| | | | | |
| L100-02 | VLQ0807K100 | COIL 10UH | 3 | G1C100K00024 |
| L701 | VLQ0807K100 | COIL 10UH | 1 | G1C100K00024 |
| L702 | VLQ0807K220 | COIL 22UH | 1 | G1C220K00016 |
| L703 | VLQ0807K100 | COIL 10UH | 1 | G1C100K00024 |
| L708,09 | VLQ0807K100 | COIL 10UH | 2 | G1C100K00024 |
| L900 | VLQ0807K100 | COIL 10UH | 1 | G1C100K00024 |
| L927 | VLQ0807K100 | COIL 10UH | 1 | G1C100K00024 |
| L1000,01 | G1C100K00025 | COIL 10UH | 2 | |
| L1002 | VLQ0807K100 | COIL 10UH | 1 | G1C100K00024 |
| L1003 | G1C100KA0004 | COIL 10UH | 1 | |
| L1006 | VLQ0807K100 | COIL 10UH | 1 | G1C100K00024 |
| L2000 | VLQ0807K100 | COIL 10UH | 1 | G1C100K00024 |

Components identified with the mark ⚠ have special characteristics for safety.
When replacing any of these component, use only the same type.

| Ref.No. | Part No. | Part Name & Description | Pcs | Remarks |
|---|---|---|---|---|
| L2001 | G1C4R7MA0031 | COIL 4.7UH | 1 | |
| L2003 | G1C100K00019 | COIL 10UH | 1 | |
| L3001 | VLQ0807K100 | COIL 10UH | 1 | G1C100K00024 |
| L4104 | G1C100K00019 | COIL 10UH | 1 | |
| | | | | |
| P1 | K1KA40A00217 | CONNECTOR (MALE) | 1 | |
| P2 | K1KAC0A00023 | CONNECTOR (MALE) | 1 | |
| P3 | K1MN20B00028 | CONNECTOR | 1 | |
| P4 | K1MN10A00045 | CONNECTOR | 1 | |
| P5 | VJP3949A080H | CONNECTOR (MALE) | 1 | |
| P6 | K1KA40A00216 | CONNECTOR (MALE) | 1 | |
| P7 | VJS3791D016 | CONNECTOR (FEMALE) | 1 | |
| P8 | VJS3826C050 | CONNECTOR (FEMALE) | 1 | |
| | | | | |
| Q701 | 2SB0970X0L | TRANSISTOR | 1 | |
| Q702 | B1ADGD000005 | TRANSISTOR | 1 | |
| Q708 | 2SB0970X0L | TRANSISTOR | 1 | |
| Q927 | 2SD2216J0L | TRANSISTOR | 1 | |
| Q928 | 2SD0601A0L | TRANSISTOR | 1 | |
| Q1601 | 2SB1462J0L | TRANSISTOR | 1 | |
| Q1602 | XP1501 | TRANSISTOR-RESISTOR | 1 | |
| Q1603 | 2SD1819A-R | TRANSISTOR | 1 | |
| Q1604 | 2SB1462J0L | TRANSISTOR | 1 | |
| Q1605 | 2SD2216J0L | TRANSISTOR | 1 | |
| Q1606 | 2SB1462J0L | TRANSISTOR | 1 | |
| Q1651 | 2SD2216J0L | TRANSISTOR | 1 | |
| Q1652 | XP1401 | TRANSISTOR-RESISTOR | 1 | |
| Q1653 | 2SB1218A-R | TRANSISTOR | 1 | |
| Q1654 | 2SD2216J0L | TRANSISTOR | 1 | |
| Q3000 | XN0460100L | TRANSISTOR-RESISTOR | 1 | |
| Q3001 | 2SD1979 | TRANSISTOR | 1 | |
| | | | | |
| QR701 | UN9211 | TRANSISTOR-RESISTOR | 1 | |
| QR705 | UN9211 | TRANSISTOR-RESISTOR | 1 | |
| QR708,09 | UN9213 | TRANSISTOR-RESISTOR | 2 | |
| QR1601 | UNR9113J0L | TRANSISTOR | 1 | |
| QR1602 | UNR9111J0L | TRANSISTOR | 1 | |
| QR1651 | UN9213 | TRANSISTOR-RESISTOR | 1 | |
| QR3000,01 | UNR9215J0L | TRANSISTOR | 2 | |
| QR3002 | B1GDBEJG0002 | TRANSISTOR | 1 | |
| | | | | |
| R1,R2 | ERJ3GEY0R00 | M.RESISTOR CH 1/16W 0 | 2 | |
| R49 | ERJ3GEY0R00 | M.RESISTOR CH 1/16W 0 | 1 | |
| R50 | ERJ2GE0R00 | M.RESISTOR CH 1/16W 0 | 1 | |
| R100-02 | ERJ2GE0R00 | M.RESISTOR CH 1/16W 0 | 3 | |
| R110-12 | ERJ3GEY0R00 | M.RESISTOR CH 1/16W 0 | 3 | |
| R701 | ERJ2GEJ272 | M.RESISTOR CH 1/16W 2.7K | 1 | |
| R702 | ERJ2GEJ473 | M.RESISTOR CH 1/16W 47K | 1 | |
| R703,04 | ERJ2GEJ272 | M.RESISTOR CH 1/16W 2.7K | 2 | |
| R705 | ERJ2GEJ473 | M.RESISTOR CH 1/16W 47K | 1 | |
| R706 | ERJ2GEJ472 | M.RESISTOR CH 1/16W 4.7K | 1 | |
| R707 | ERJ2GEJ104 | M.RESISTOR CH 1/16W 100K | 1 | |
| R708 | ERJ2GEJ103 | M.RESISTOR CH 1/16W 10K | 1 | |
| R709 | ERJ2GE0R00 | M.RESISTOR CH 1/16W 0 | 1 | |
| R714 | ERJ2GEJ333 | M.RESISTOR CH 1/16W 33K | 1 | |
| R715 | ERJ2GEJ473 | M.RESISTOR CH 1/16W 47K | 1 | |
| R716 | ERJ2GEJ472 | M.RESISTOR CH 1/16W 4.7K | 1 | |
| R718 | ERJ2GEJ472 | M.RESISTOR CH 1/16W 4.7K | 1 | |
| R719 | ERJ2GEJ274 | M.RESISTOR CH 1/16W 270K | 1 | |
| R720 | ERJ2GEJ333 | M.RESISTOR CH 1/16W 33K | 1 | |
| R721 | ERJ2GEJ473 | M.RESISTOR CH 1/16W 47K | 1 | |
| R722 | ERJ2GEJ224 | M.RESISTOR CH 1/16W 220K | 1 | |
| R723,24 | ERJ6RBB472 | M.RESISTOR CH 1/10W 4.7K | 2 | |
| R725,26 | ERJ2GEJ103 | M.RESISTOR CH 1/16W 10K | 2 | |
| R727 | ERJ2GEJ224 | M.RESISTOR CH 1/16W 220K | 1 | |
| R728 | ERJ2GEJ473 | M.RESISTOR CH 1/16W 47K | 1 | |
| R729 | ERJ2GEJ472 | M.RESISTOR CH 1/16W 4.7K | 1 | |
| R730 | ERJ2GEJ103 | M.RESISTOR CH 1/16W 10K | 1 | |
| R731 | ERJ2GEJ124 | M.RESISTOR CH 1/16W 120K | 1 | |
| R732 | ERJ2GEJ333 | M.RESISTOR CH 1/16W 33K | 1 | |
| R733 | ERJ2GEJ563 | M.RESISTOR CH 1/16W 56K | 1 | |
| R734,35 | ERJ3GEYJ2R2 | M.RESISTOR CH 1/16W 2.2 | 2 | |
| R737 | ERJ2GEJ102 | M.RESISTOR CH 1/16W 1K | 1 | |
| R738 | ERJ2GE0R00 | M.RESISTOR CH 1/16W 0 | 1 | |
| R739 | ERJ2GEJ472 | M.RESISTOR CH 1/16W 4.7K | 1 | |

| Ref.No. | Part No. | Part Name & Description | Pcs | Remarks |
|---|---|---|---|---|
| R740 | ERJ2GEJ103 | M.RESISTOR CH 1/16W 10K | 1 | |
| R741 | ERJ2GEJ182 | M.RESISTOR CH 1/16W 1.8K | 1 | |
| R742,43 | ERJ2GEJ472 | M.RESISTOR CH 1/16W 4.7K | 2 | |
| R744 | ERJ2GEJ104 | M.RESISTOR CH 1/16W 100K | 1 | |
| R745 | ERJ6GEYJ3R9 | M.RESISTOR CH 1/10W 3.9 | 1 | |
| R746 | ERJ2GEJ155 | M.RESISTOR CH 1/16W 1.5M | 1 | |
| R747 | ERJ2GEJ470 | M.RESISTOR CH 1/16W 47 | 1 | |
| R748 | ERJ2GEJ103 | M.RESISTOR CH 1/16W 10K | 1 | |
| R749 | ERJ2GEJ473 | M.RESISTOR CH 1/16W 47K | 1 | |
| R750 | ERJ2GEJ393 | M.RESISTOR CH 1/16W 39K | 1 | |
| R751 | ERJ2GEJ473 | M.RESISTOR CH 1/16W 47K | 1 | |
| R752 | ERJ2GEJ333 | M.RESISTOR CH 1/16W 33K | 1 | |
| R754 | ERJ2GEJ224 | M.RESISTOR CH 1/16W 220K | 1 | |
| R755 | ERJ2GEJ473 | M.RESISTOR CH 1/16W 47K | 1 | |
| R760 | ERJ2GEJ103 | M.RESISTOR CH 1/16W 10K | 1 | |
| R765 | ERJ2GEJ101 | M.RESISTOR CH 1/16W 100 | 1 | |
| R768 | ERJ3GEYJ3R3 | M.RESISTOR CH 1/16W 3.3 | 1 | |
| R770 | ERJ2GEJ101 | M.RESISTOR CH 1/16W 100 | 1 | |
| R771 | ERJ3GEYJ3R3 | M.RESISTOR CH 1/16W 3.3 | 1 | |
| R776 | ERJ2GEJ273 | M.RESISTOR CH 1/16W 27K | 1 | |
| R778 | ERJ2GEJ473 | M.RESISTOR CH 1/16W 47K | 1 | |
| R779 | ERJ2GEJ103 | M.RESISTOR CH 1/16W 10K | 1 | |
| R780 | ERJ2GEJ274 | M.RESISTOR CH 1/16W 270K | 1 | |
| R781 | ERJ2GEJ473 | M.RESISTOR CH 1/16W 47K | 1 | |
| R786 | ERJ2GEJ393 | M.RESISTOR CH 1/16W 39K | 1 | |
| R787 | ERJ2GEJ473 | M.RESISTOR CH 1/16W 47K | 1 | |
| R788 | ERJ2GEJ182 | M.RESISTOR CH 1/16W 1.8K | 1 | |
| R789 | ERJ2GEJ103 | M.RESISTOR CH 1/16W 10K | 1 | |
| R793 | ERJ2GEJ473 | M.RESISTOR CH 1/16W 47K | 1 | |
| R794 | ERJ2GEJ222 | M.RESISTOR CH 1/16W 2.2K | 1 | |
| R797 | ERJ2GEJ474 | M.RESISTOR CH 1/16W 470K | 1 | |
| R798 | ERJ2GEJ103 | M.RESISTOR CH 1/16W 10K | 1 | |
| R799 | ERJ2GEJ224 | M.RESISTOR CH 1/16W 220K | 1 | |
| R801,02 | ERJ2GE0R00 | M.RESISTOR CH 1/16W 0 | 2 | |
| R803,04 | ERJ2GEJ472 | M.RESISTOR CH 1/16W 4.7K | 2 | |
| R805 | ERJ2GE0R00 | M.RESISTOR CH 1/16W 0 | 1 | |
| R807 | ERJ2GEJ103 | M.RESISTOR CH 1/16W 10K | 1 | |
| R809 | ERJ2GE0R00 | M.RESISTOR CH 1/16W 0 | 1 | |
| R810 | ERJ2GEJ103 | M.RESISTOR CH 1/16W 10K | 1 | |
| R823 | ERJ2GE0R00 | M.RESISTOR CH 1/16W 0 | 1 | |
| R825 | ERJ2GE0R00 | M.RESISTOR CH 1/16W 0 | 1 | |
| R862 | ERJ2GEJ104 | M.RESISTOR CH 1/16W 100K | 1 | |
| R892 | ERJ2GEJ104 | M.RESISTOR CH 1/16W 100K | 1 | |
| R896 | ERJ2GEJ104 | M.RESISTOR CH 1/16W 100K | 1 | |
| R901 | ERJ2GE0R00 | M.RESISTOR CH 1/16W 0 | 1 | |
| R902 | ERJ2GEJ473 | M.RESISTOR CH 1/16W 47K | 1 | |
| R903 | ERJ2GEJ105 | M.RESISTOR CH 1/16W 1M | 1 | |
| R904-06 | ERJ2GE0R00 | M.RESISTOR CH 1/16W 0 | 3 | |
| R909 | ERJ2GE0R00 | M.RESISTOR CH 1/16W 0 | 1 | |
| R911 | ERJ2GEJ105 | M.RESISTOR CH 1/16W 1M | 1 | |
| R919 | ERJ2GEJ473 | M.RESISTOR CH 1/16W 47K | 1 | |
| R920 | ERJ2GEJ472 | M.RESISTOR CH 1/16W 4.7K | 1 | |
| R926 | ERJ2GE0R00 | M.RESISTOR CH 1/16W 0 | 1 | |
| R927 | ERJ2GEJ684 | M.RESISTOR CH 1/16W 680K | 1 | |
| R928 | ERJ2GEJ103 | M.RESISTOR CH 1/16W 10K | 1 | |
| R929 | ERJ2GEJ564 | M.RESISTOR CH 1/16W 560K | 1 | |
| R930 | ERJ2GEJ334 | M.RESISTOR CH 1/16W 330K | 1 | |
| R931,32 | ERJ2GEJ103 | M.RESISTOR CH 1/16W 10K | 2 | |
| R933 | ERJ2GEJ822 | M.RESISTOR CH 1/16W 8.2K | 1 | |
| R934 | ERJ2GEJ103 | M.RESISTOR CH 1/16W 10K | 1 | |
| R935 | ERJ2GEJ104 | M.RESISTOR CH 1/16W 100K | 1 | |
| R936 | ERJ2GEJ103 | M.RESISTOR CH 1/16W 10K | 1 | |
| R937 | ERJ2GEJ101 | M.RESISTOR CH 1/16W 100 | 1 | |
| R938 | ERJ2GEJ563 | M.RESISTOR CH 1/16W 56K | 1 | |
| R939,40 | ERJ2GEJ472 | M.RESISTOR CH 1/16W 4.7K | 2 | |
| R941 | ERJ2GEJ103 | M.RESISTOR CH 1/16W 10K | 1 | |
| R942 | ERJ2GEJ124 | M.RESISTOR CH 1/16W 120K | 1 | |
| R943 | ERJ2GEJ683 | M.RESISTOR CH 1/16W 68K | 1 | |
| R944 | ERJ2GEJ224 | M.RESISTOR CH 1/16W 220K | 1 | |
| R945 | ERJ2GEJ563 | M.RESISTOR CH 1/16W 56K | 1 | |
| R946 | ERJ2GEJ333 | M.RESISTOR CH 1/16W 33K | 1 | |
| R947 | ERJ2GEJ102 | M.RESISTOR CH 1/16W 1K | 1 | |
| R948 | ERJ3GEYJ221 | M.RESISTOR CH 1/16W 220 | 1 | |
| R949 | ERJ2GEJ104 | M.RESISTOR CH 1/16W 100K | 1 | |
| R954 | ERJ2GE0R00 | M.RESISTOR CH 1/16W 0 | 1 | |

Components identified with the mark ⚠ have special characteristics for safety.
When replacing any of these component, use only the same type.

| Ref.No. | Part No. | Part Name & Description | Pcs | Remarks |
|---|---|---|---|---|
| R979 | ERJ2GEJ103 | M.RESISTOR CH 1/16W 10K | 1 | |
| R980 | ERJ2GE0R00 | M.RESISTOR CH 1/16W 0 | 1 | |
| R990 | ERJ2GE0R00 | M.RESISTOR CH 1/16W 0 | 1 | |
| R991 | ERJ2GEJ103 | M.RESISTOR CH 1/16W 10K | 1 | |
| R992 | ERJ8GEYJ2R2 | M.RESISTOR CH 1/8W 2.2 | 1 | |
| R993 | ERJ2GEJ101 | M.RESISTOR CH 1/16W 100 | 1 | |
| R994 | ERJ2GEJ103 | M.RESISTOR CH 1/16W 10K | 1 | |
| R995,96 | ERJ2GEJ473 | M.RESISTOR CH 1/16W 47K | 2 | |
| R997,98 | ERJ2GEJ103 | M.RESISTOR CH 1/16W 10K | 2 | |
| R999 | ERJ2GEJ104 | M.RESISTOR CH 1/16W 100K | 1 | |
| R1003 | ERJ2GE0R00 | M.RESISTOR CH 1/16W 0 | 1 | |
| R1020 | ERJ3GEYJ103 | M.RESISTOR CH 1/16W 10K | 1 | D0GB103JA002 |
| R1023 | ERJ3GEYJ103 | M.RESISTOR CH 1/16W 10K | 1 | D0GB103JA002 |
| R1029 | ERJ3GEYJ103 | M.RESISTOR CH 1/16W 10K | 1 | D0GB103JA002 |
| R1041 | ERJ3GEYG102 | M.RESISTOR CH 1/16W 1K | 1 | |
| R1056 | ERJ3GEYJ103 | M.RESISTOR CH 1/16W 10K | 1 | D0GB103JA002 |
| R1154 | ERJ3GEYJ103 | M.RESISTOR CH 1/16W 10K | 1 | D0GB103JA002 |
| R1167 | ERJ3GEY0R00 | M.RESISTOR CH 1/16W 0 | 1 | |
| R1175 | ERJ3GEY0R00 | M.RESISTOR CH 1/16W 0 | 1 | |
| R1178,79 | ERJ3GEYJ105 | M.RESISTOR CH 1/16W 1M | 2 | |
| R1182 | ERJ3GEYJ105 | M.RESISTOR CH 1/16W 1M | 1 | |
| R1183 | ERJ2RMJ391 | M.RESISTOR CH 1/16W 390 | 1 | |
| R1185 | ERJ2GEJ331 | M.RESISTOR CH 1/16W 330 | 1 | |
| R1186 | ERJ3GEY0R00 | M.RESISTOR CH 1/16W 0 | 1 | |
| R1189 | ERJ2GE0R00 | M.RESISTOR CH 1/16W 0 | 1 | |
| R1191 | ERJ2GE0R00 | M.RESISTOR CH 1/16W 0 | 1 | |
| R1193 | ERJ2GE0R00 | M.RESISTOR CH 1/16W 0 | 1 | |
| R1194 | ERJ2GEJ101 | M.RESISTOR CH 1/16W 100 | 1 | |
| R1195,96 | ERJ2GE0R00 | M.RESISTOR CH 1/16W 0 | 2 | |
| R1198,99 | ERJ2GE0R00 | M.RESISTOR CH 1/16W 0 | 2 | |
| R1200 | ERJ2GEJ270 | M.RESISTOR CH 1/16W 27 | 1 | |
| R1201-07 | ERJ2GE0R00 | M.RESISTOR CH 1/16W 0 | 7 | |
| R1601 | ERJ2GEJ473 | M.RESISTOR CH 1/16W 47K | 1 | |
| R1602 | ERJ2GEJ224 | M.RESISTOR CH 1/16W 220K | 1 | |
| R1603 | ERJ2GEJ332 | M.RESISTOR CH 1/16W 3.3K | 1 | |
| R1604 | ERJ2GEJ222 | M.RESISTOR CH 1/16W 2.2K | 1 | |
| R1607 | ERJ2GEJ563 | M.RESISTOR CH 1/16W 56K | 1 | |
| R1608 | ERJ2GEJ222 | M.RESISTOR CH 1/16W 2.2K | 1 | |
| R1609 | ERJ2GEJ221 | M.RESISTOR CH 1/16W 220 | 1 | |
| R1610 | ERJ2GEJ473 | M.RESISTOR CH 1/16W 47K | 1 | |
| R1612 | ERJ2RKD274 | M.RESISTOR CH 1/16W 270K | 1 | |
| R1613 | ERJ2RHD223 | M.RESISTOR CH 1/16W 22K | 1 | |
| R1614 | ERJ2RHD563 | M.RESISTOR CH 1/16W 56K | 1 | |
| R1615 | ERJ2GEJ223 | M.RESISTOR CH 1/16W 22K | 1 | |
| R1616 | ERJ2RHD473 | M.RESISTOR CH 1/16W 47K | 1 | |
| R1617 | ERJ2GEJ224 | M.RESISTOR CH 1/16W 220K | 1 | |
| R1618 | ERJ2GE0R00 | M.RESISTOR CH 1/16W 0 | 1 | |
| R1620 | ERJ2GEJ473 | M.RESISTOR CH 1/16W 47K | 1 | |
| R1651 | ERJ2GEJ473 | M.RESISTOR CH 1/16W 47K | 1 | |
| R1652 | ERJ2GEJ224 | M.RESISTOR CH 1/16W 220K | 1 | |
| R1653 | ERJ2GEJ562 | M.RESISTOR CH 1/16W 5.6K | 1 | |
| R1654 | ERJ2GEJ222 | M.RESISTOR CH 1/16W 2.2K | 1 | |
| R1655 | ERJ2GEJ104 | M.RESISTOR CH 1/16W 100K | 1 | |
| R1657 | ERJ2GEJ222 | M.RESISTOR CH 1/16W 2.2K | 1 | |
| R1658 | ERJ2GEJ221 | M.RESISTOR CH 1/16W 220 | 1 | |
| R1659 | ERJ2GEJ473 | M.RESISTOR CH 1/16W 47K | 1 | |
| R1660 | ERJ2GE0R00 | M.RESISTOR CH 1/16W 0 | 1 | |
| R1662 | ERJ2RHD104 | M.RESISTOR CH 1/16W 100K | 1 | |
| R1663 | ERJ2RKD224 | M.RESISTOR CH 1/16W 220K | 1 | |
| R1664 | ERJ2RKD154 | M.RESISTOR CH 1/16W 150K | 1 | |
| R1666 | ERJ2GE0R00 | M.RESISTOR CH 1/16W 0 | 1 | |
| R1667 | ERJ2GEJ104 | M.RESISTOR CH 1/16W 100K | 1 | |
| R1668 | ERJ2GEJ102 | M.RESISTOR CH 1/16W 1K | 1 | |
| R1669,70 | ERJ2GE0R00 | M.RESISTOR CH 1/16W 0 | 2 | |
| R1673 | ERJ2GEJ104 | M.RESISTOR CH 1/16W 100K | 1 | |
| R2003 | ERJ2GE0R00 | M.RESISTOR CH 1/16W 0 | 1 | |
| R2004,05 | ERJ2GEJ223 | M.RESISTOR CH 1/16W 22K | 2 | |
| R2006,07 | ERJ2GEJ471 | M.RESISTOR CH 1/16W 470 | 2 | |
| R2009 | ERJ2GEJ102 | M.RESISTOR CH 1/16W 1K | 1 | |
| R2010,11 | ERJ2GE0R00 | M.RESISTOR CH 1/16W 0 | 2 | |
| R2014 | ERJ2GEJ472 | M.RESISTOR CH 1/16W 4.7K | 1 | |
| R2018 | ERJ2GE0R00 | M.RESISTOR CH 1/16W 0 | 1 | |
| R2022 | ERJ2GE0R00 | M.RESISTOR CH 1/16W 0 | 1 | |
| R2029,30 | ERJ2GEJ473 | M.RESISTOR CH 1/16W 47K | 2 | |
| R2096 | ERJ2GE0R00 | M.RESISTOR CH 1/16W 0 | 1 | |

| Ref.No. | Part No. | Part Name & Description | Pcs | Remarks |
|---|---|---|---|---|
| R3012,13 | ERJ2GEJ102 | M.RESISTOR CH 1/16W 1K | 2 | |
| R3014-16 | ERJ2GEJ103 | M.RESISTOR CH 1/16W 10K | 3 | |
| R3017 | ERJ2GEJ473 | M.RESISTOR CH 1/16W 47K | 1 | |
| R3018 | ERJ2GE0R00 | M.RESISTOR CH 1/16W 0 | 1 | |
| R3019 | ERJ2GEJ103 | M.RESISTOR CH 1/16W 10K | 1 | |
| R3020-22 | ERJ2GEJ473 | M.RESISTOR CH 1/16W 47K | 3 | |
| R3023 | ERJ2GE0R00 | M.RESISTOR CH 1/16W 0 | 1 | |
| R3024 | ERJ2GEJ105 | M.RESISTOR CH 1/16W 1M | 1 | |
| R3026 | ERJ2GEJ105 | M.RESISTOR CH 1/16W 1M | 1 | |
| R3031 | ERJ2GE0R00 | M.RESISTOR CH 1/16W 0 | 1 | |
| R3032 | ERJ2GEJ121 | M.RESISTOR CH 1/16W 120 | 1 | |
| R3033 | ERJ2GEJ472 | M.RESISTOR CH 1/16W 4.7K | 1 | |
| R3034,35 | ERJ2GE0R00 | M.RESISTOR CH 1/16W 0 | 2 | |
| R3036,37 | ERJ2GEJ121 | M.RESISTOR CH 1/16W 120 | 2 | |
| R3038 | ERJ2GE0R00 | M.RESISTOR CH 1/16W 0 | 1 | |
| R3039 | ERJ2GEJ473 | M.RESISTOR CH 1/16W 47K | 1 | |
| R3040 | ERJ2GEJ103 | M.RESISTOR CH 1/16W 10K | 1 | |
| R3041-44 | ERJ2GEJ473 | M.RESISTOR CH 1/16W 47K | 4 | |
| R3046 | ERJ2GEJ102 | M.RESISTOR CH 1/16W 1K | 1 | |
| R3047 | ERJ2GE0R00 | M.RESISTOR CH 1/16W 0 | 1 | |
| R3048 | ERJ2GEJ473 | M.RESISTOR CH 1/16W 47K | 1 | |
| R3049 | ERJ2GEJ332 | M.RESISTOR CH 1/16W 3.3K | 1 | |
| R3050 | ERJ2GE0R00 | M.RESISTOR CH 1/16W 0 | 1 | |
| R3051 | ERJ2GEJ332 | M.RESISTOR CH 1/16W 3.3K | 1 | |
| R3052 | ERJ2GEJ473 | M.RESISTOR CH 1/16W 47K | 1 | |
| R3055 | ERJ2GEJ471 | M.RESISTOR CH 1/16W 470 | 1 | |
| R3057 | ERJ2GEJ471 | M.RESISTOR CH 1/16W 470 | 1 | |
| R3059 | ERJ2GE0R00 | M.RESISTOR CH 1/16W 0 | 1 | |
| R3060 | ERJ2GEJ104 | M.RESISTOR CH 1/16W 100K | 1 | |
| R3061 | ERJ2GEJ682 | M.RESISTOR CH 1/16W 6.8K | 1 | |
| R3062 | ERJ2GEJ473 | M.RESISTOR CH 1/16W 47K | 1 | |
| R3063,64 | ERJ2GE0R00 | M.RESISTOR CH 1/16W 0 | 2 | |
| R3078 | ERJ2GEJ102 | M.RESISTOR CH 1/16W 1K | 1 | |
| R3083,84 | ERJ2GEJ102 | M.RESISTOR CH 1/16W 1K | 2 | |
| R3089 | ERJ2GEJ101 | M.RESISTOR CH 1/16W 100 | 1 | |
| R3091 | ERJ2GEJ101 | M.RESISTOR CH 1/16W 100 | 1 | |
| R3095 | ERJ2GEJ101 | M.RESISTOR CH 1/16W 100 | 1 | |
| R3098 | ERJ2GE0R00 | M.RESISTOR CH 1/16W 0 | 1 | |
| R3105 | ERJ2GEJ102 | M.RESISTOR CH 1/16W 1K | 1 | |
| R3107 | ERJ2GEJ102 | M.RESISTOR CH 1/16W 1K | 1 | |
| R3109,10 | ERJ2GEJ102 | M.RESISTOR CH 1/16W 1K | 2 | |
| R3116 | ERJ2GE0R00 | M.RESISTOR CH 1/16W 0 | 1 | |
| R3118 | ERJ2GEJ332 | M.RESISTOR CH 1/16W 3.3K | 1 | |
| R3154 | ERJ2GEJ473 | M.RESISTOR CH 1/16W 47K | 1 | |
| R3156 | ERJ2GEJ332 | M.RESISTOR CH 1/16W 3.3K | 1 | |
| R3157 | ERJ2GEJ223 | M.RESISTOR CH 1/16W 22K | 1 | |
| R3158 | ERJ2GEJ105 | M.RESISTOR CH 1/16W 1M | 1 | |
| R3163 | ERJ2GEJ473 | M.RESISTOR CH 1/16W 47K | 1 | |
| R3164 | ERJ2GEJ103 | M.RESISTOR CH 1/16W 10K | 1 | |
| R3165 | ERJ2GEJ473 | M.RESISTOR CH 1/16W 47K | 1 | |
| R3166,67 | ERJ2GE0R00 | M.RESISTOR CH 1/16W 0 | 2 | |
| R3168,69 | ERJ2GEJ332 | M.RESISTOR CH 1/16W 3.3K | 2 | |
| R3170-73 | ERJ2GEJ472 | M.RESISTOR CH 1/16W 4.7K | 4 | |
| R3175 | ERJ2GEJ332 | M.RESISTOR CH 1/16W 3.3K | 1 | |
| R3178 | ERJ2GEJ101 | M.RESISTOR CH 1/16W 100 | 1 | |
| R3179 | ERJ2GEJ473 | M.RESISTOR CH 1/16W 47K | 1 | |
| R3181 | ERJ2GEJ101 | M.RESISTOR CH 1/16W 100 | 1 | |
| R3182 | ERJ2GEJ102 | M.RESISTOR CH 1/16W 1K | 1 | |
| R3183 | ERJ2GEJ333 | M.RESISTOR CH 1/16W 33K | 1 | |
| R3184 | ERJ2RHD183 | M.RESISTOR CH 1/16W 18K | 1 | |
| R3185 | ERJ2RHD102 | M.RESISTOR CH 1/16W 1K | 1 | |
| R3186 | ERJ2GE0R00 | M.RESISTOR CH 1/16W 0 | 1 | |
| R3187 | ERJ2GEJ393 | M.RESISTOR CH 1/16W 39K | 1 | |
| R3188 | ERJ2GEJ102 | M.RESISTOR CH 1/16W 1K | 1 | |
| R3189 | ERJ2GE0R00 | M.RESISTOR CH 1/16W 0 | 1 | |
| R3190 | ERJ2GEJ333 | M.RESISTOR CH 1/16W 33K | 1 | |
| R3191,92 | ERJ2GEJ332 | M.RESISTOR CH 1/16W 3.3K | 2 | |
| R3195 | ERJ2GEJ472 | M.RESISTOR CH 1/16W 4.7K | 1 | |
| R3196 | ERJ2GEJ473 | M.RESISTOR CH 1/16W 47K | 1 | |
| R3198,99 | ERJ2GEJ473 | M.RESISTOR CH 1/16W 47K | 2 | |
| R3201 | ERJ2GEJ102 | M.RESISTOR CH 1/16W 1K | 1 | |
| R3207 | ERJ2GE0R00 | M.RESISTOR CH 1/16W 0 | 1 | |
| R3210 | ERJ2GE0R00 | M.RESISTOR CH 1/16W 0 | 1 | |
| R3211 | ERJ2GEJ332 | M.RESISTOR CH 1/16W 3.3K | 1 | |
| R4115-18 | ERJ2GEJ473 | M.RESISTOR CH 1/16W 47K | 4 | |

Components identified with the mark ⚠ have special characteristics for safety.
When replacing any of these component, use only the same type.

| Ref.No. | Part No. | Part Name & Description | Pcs | Remarks |
|---|---|---|---|---|
| R4119,20 | ERJ2GE0R00 | M.RESISTOR CH 1/16W 0 | 2 | |
| R4156 | ERJ2GEJ333 | M.RESISTOR CH 1/16W 33K | 1 | |
| R4157 | ERJ2GEJ103 | M.RESISTOR CH 1/16W 10K | 1 | |
| R4166-71 | ERJ2GE0R00 | M.RESISTOR CH 1/16W 0 | 6 | |
| R4173 | ERJ2GE0R00 | M.RESISTOR CH 1/16W 0 | 1 | |
| | | | | |
| X1000 | H1A3155B0002 | CRYSTAL OSCILLATOR | 1 | |
| X3000 | H0J270500024 | CRYSTAL OSCILLATOR | 1 | |
| | | | | |
| | | MISCELLANEOUS | | |
| | | | | |
| | VSC5623 | CAMERA PCB HEAT SINK (L) | 1 | |
| | VSC5624 | CAMERA PCB HEAT SINK (U) | 1 | |
| | VGQ8094 | COOLING SHEET CR | 1 | |
| | VGQ8096 | COOLING SHEET_C2 | 1 | |
| | VGQ8097 | COOLING SHEET_C3 | 5 | |
| | XQN16+B3FN | SCREW | 2 | |
| | | | | |
| | | | | |
| | | | | |
| | | | | |
| ■ E4 | VEP06F67A | FRONT C.B.A. | 1 | (RTL) |
| | | | | |
| | | | | |
| C6301 | F1H1H104A783 | C.CAPACITOR CH 50V 0.1U | 1 | |
| C6302 | ECST1CX156Z | T.CAPACITOR CH 16V 15U | 1 | |
| C6303 | ECST0JY226 | T.CAPACITOR CH6.3V 22U | 1 | |
| C6304 | F3F1A226A001 | T.CAPACITOR CH 10V 22U | 1 | |
| C6306,07 | F1J0J106A014 | T.CAPACITOR CH6.3V 10U | 2 | |
| C6308 | ECUX1H471KBV | C.CAPACITOR CH 50V 470P | 1 | |
| C6310 | ECUX1A105KBV | C.CAPACITOR CH 10V 1U | 1 | |
| C6312 | ECUX1H471KBV | C.CAPACITOR CH 50V 470P | 1 | |
| C6313 | F1H1H104A783 | C.CAPACITOR CH 50V 0.1U | 1 | |
| C6314 | F3G1C2260001 | T.CAPACITOR CH 16V 22U | 1 | |
| | | | | |
| D6301,02 | B3EA00000029 | LED | 2 | |
| | | | | |
| IC6301 | B3MAZ0000028 | PHOTO DETECTOR | 1 | |
| IC6302 | L2ES00000011 | SENSOR UNIT | 1 | |
| IC6303 | C0ABBA000077 | IC | 1 | |
| IC6304 | C0JBAS000063 | IC | 1 | |
| | | | | |
| L6301-03 | G1C100K00019 | COIL 10UH | 3 | |
| | | | | |
| P6301 | VJS3791D016 | CONNECTOR (FEMALE) | 1 | |
| P6302 | VJS3791D010 | CONNECTOR (FEMALE) | 1 | K1MN10B00021 |
| | | | | |
| R6301 | ERJ3GEYJ470 | M.RESISTOR CH 1/16W 47 | 1 | |
| R6305 | ERJ3GEYJ103 | M.RESISTOR CH 1/16W 10K | 1 | D0GB103JA002 |
| R6306,07 | ERJ3GEYJ474 | M.RESISTOR CH 1/16W 470K | 2 | |
| R6308 | ERJ3GEYG472 | M.RESISTOR CH 1/16W 4.7K | 1 | |
| R6310 | ERJ3GEYJ274 | M.RESISTOR CH 1/16W 270K | 1 | |
| R6311 | ERJ3GEY0R00 | M.RESISTOR CH 1/16W 0 | 1 | |
| | | | | |
| | | MISCELLANEOUS | | |
| | | | | |
| | VMP8013 | FRONT PCB BASE | 1 | |
| | VJF1495 | LED HOLDER | 1 | |
| | XQN16+B3FN | SCREW | 3 | |
| | XQN16+B4FN | SCREW | 1 | |
| | | | | |
| | | | | |
| | | | | |
| | | | | |
| | | | | |
| ■ E5 | VEP04861A | SIDE JACK FPC C.B.A. | 1 | (RTL) |
| | | | | |
| | | | | |
| C4101 | ECJ0EB1A104K | C.CAPACITOR CH 10V 0.1U | 1 | |
| C4102,03 | ECJ1VB1A224K | T.CAPACITOR CH 10V 0.22U | 2 | |
| C4104 | ECJ1VB0J105K | C.CAPACITOR CH 35V 1M | 1 | |
| C4105-08 | ECJ0EB1E472K | C.CAPACITOR CH 25V 4700P | 4 | |
| C4109,10 | ECJ1VB0J105K | C.CAPACITOR CH 35V 1M | 2 | |
| C4111,12 | ECST0JY226 | T.CAPACITOR CH6.3V 22U | 2 | |
| | | | | |
| | | | | |

| Ref.No. | Part No. | Part Name & Description | Pcs | Remarks |
|---|---|---|---|---|
| C4113 | ECJ1VB0J105K | C.CAPACITOR CH 35V 1M | 1 | |
| C4115 | ECST0JY226 | T.CAPACITOR CH6.3V 22U | 1 | |
| | | | | |
| D4101 | MA132WA | DIODE | 1 | |
| D4102 | MA2SD2400L | DIODE | 1 | |
| D4103 | B3GA00000041 | DIODE | 1 | |
| | | | | |
| J4101 | K2HZ104A0002 | S TERMINAL JACK | 1 | |
| J4102 | K2HC106B0010 | AC POWER PLUG | 1 | |
| J4103 | K2HC107B0003 | AC POWER PLUG | 1 | |
| | | | | |
| L4101 | J0JBC0000054 | FILTER | 1 | |
| L4102-04 | J0JAC0000014 | FILTER | 3 | |
| L4105,06 | J0JBC0000054 | FILTER | 2 | |
| L4107 | J0JAC0000014 | FILTER | 1 | |
| L4108-12 | J0JAC0000015 | FILTER | 5 | |
| L4113 | J0JCC0000119 | FILTER | 1 | |
| L4114 | J0JAC0000015 | FILTER | 1 | |
| | | | | |
| P4101 | K1MN33B00023 | CONNECTOR | 1 | |
| | | | | |
| Q4101 | 2SD103000L | TRANSISTOR | 1 | |
| Q4102 | B1ABBE000002 | TRANSISTOR | 1 | |
| Q4103 | 2SD2216J0L | TRANSISTOR | 1 | |
| Q4104 | 2SB1462J0L | TRANSISTOR | 1 | |
| Q4105 | 2SD2216J0L | TRANSISTOR | 1 | |
| Q4106 | 2SB1462J0L | TRANSISTOR | 1 | |
| Q4107 | 2SD1819A-R | TRANSISTOR | 1 | |
| | | | | |
| QR4101 | B1GDBEHH0001 | TRANSISTOR | 1 | |
| | | | | |
| R4101 | ERJ3GEYJ225 | M.RESISTOR CH 1/16W 2.2M | 1 | |
| R4102 | ERJ3GEYJ334 | M.RESISTOR CH 1/16W 330K | 1 | |
| R4103 | ERJ3GEYG472 | M.RESISTOR CH 1/16W 4.7K | 1 | |
| R4104 | ERJ3GEYJ182 | M.RESISTOR CH 1/16W 1.8K | 1 | |
| R4105 | ERJ3GEYJ106 | M.RESISTOR CH 1/16W 10M | 1 | |
| R4106 | ERJ3GEYJ101 | M.RESISTOR CH 1/16W 100 | 1 | |
| R4109 | ERJ3GEYG472 | M.RESISTOR CH 1/16W 4.7K | 1 | |
| R4111 | ERJ3GEYG471 | M.RESISTOR CH 1/16W 470 | 1 | |
| R4112 | ERJ6GEYG103 | M.RESISTOR CH 1/10W 10K | 1 | |
| R4113 | ERJ6GEYG154 | M.RESISTOR CH 1/10W 150K | 1 | |
| R4114 | ERJ6GEYG563 | M.RESISTOR CH 1/10W 56K | 1 | |
| R4115 | ERJ3GEYG102 | M.RESISTOR CH 1/16W 1K | 1 | |
| R4116 | ERJ3GEYJ562 | M.RESISTOR CH 1/16W 5.6K | 1 | |
| R4117 | ERJ3GEYJ151 | M.RESISTOR CH 1/16W 150 | 1 | |
| R4118 | ERJ3GEYG471 | M.RESISTOR CH 1/16W 470 | 1 | |
| R4119 | ERJ6GEYG103 | M.RESISTOR CH 1/10W 10K | 1 | |
| R4120 | ERJ6GEYG154 | M.RESISTOR CH 1/10W 150K | 1 | |
| R4121 | ERJ6GEYG563 | M.RESISTOR CH 1/10W 56K | 1 | |
| R4122 | ERJ3GEYG102 | M.RESISTOR CH 1/16W 1K | 1 | |
| R4123 | ERJ3GEYJ562 | M.RESISTOR CH 1/16W 5.6K | 1 | |
| R4124 | ERJ3GEYJ151 | M.RESISTOR CH 1/16W 150 | 1 | |
| R4125 | ERJ3GEY0R00 | M.RESISTOR CH 1/16W 0 | 1 | |
| R4131-34 | ERJ3GEY0R00 | M.RESISTOR CH 1/16W 0 | 4 | |
| | | | | |
| TH4101 | D4CC11030012 | THERMISTOR | 1 | |
| | | | | |
| | | | | |
| | | | | |
| | | | | |
| | | | | |
| ■ E7 | VEP01957A | DC IN C.B.A. | 1 | (RTL) |
| | | | | |
| | | | | |
| | | MISCELLANEOUS | | |
| | | | | |
| | VJS3381 | CONNECTOR (FEMALE) | 1 | K2EC2B000001 |
| | | | | |
| | | | | |
| | | | | |
| | | | | |
| | | | | |
| ■ E8 | VEP01953A | BATTERY C.B.A. | 1 | (RTL) |
| | | | | |
| | | | | |
| | | | | |
| | | | | |

Components identified with the mark ⚠ have special characteristics for safety.
When replacing any of these component, use only the same type.

| Ref.No. | Part No. | Part Name & Description | Pcs | Remarks |
|---|---|---|---|---|
| P1 | K1KA03B00102 | CONNECTOR (MALE) | 1 | |
| R1 | ERJ3GEY0R00 | M.RESISTOR CH 1/16W 0 | 1 | |
| ■ E9 | VEP06F66A | ZOOM FPC C.B.A. | 1 | (RTL) |
| SW201 | EVQQW101M | SWITCH | 1 | |
| VR201 | D2B1B15B0001 | V.RESISTOR 100K | 1 | |
| ■ E10 | VEP001E3A | ZOOM CON C.B.A. | 1 | (RTL) |
| D1 | MA142K | DIODE | 1 | |
| P1 | K1MN06B00077 | CONNECTOR | 1 | |
| P2 | K1MN10B00052 | CONNECTOR | 1 | |
| ■ E11 | VEP001E5A | CAS OPEN C.B.A. | 1 | (RTL) |
| SW501 | K0L1BB000022 | SWITCH | 1 | |
| | | MISCELLANEOUS | | |
| | VEE0Z34 | CAS OPEN HARNESS | 1 | |
| ■ E12 | VEP04863A | REAR JACK C.B.A. | 1 | (RTL) |
| J4301 | VJJ0182 | SYNC EDIT JACK | 1 | K2HB103B0015 |
| J4302 | K2YZ04000016 | PLUG AND JACK | 1 | |
| J4303 | K2HC106B0010 | AC POWER PLUG | 1 | |
| L4301,02 | VLF1315A102 | FILTER | 2 | J0JHC0000015 |
| L4304,05 | J0MAB0000110 | FILTER | 2 | |
| L4306 | VLF1394 | FILTER | 1 | J0MAB0000077 |
| P4301 | K1MN10B00052 | CONNECTOR | 1 | |
| P4302 | VJS3801D024 | CONNECTOR (FEMALE) | 1 | |
| R4301,02 | ERJ3GEY0R00 | M.RESISTOR CH 1/16W 0 | 2 | |
| R4304,05 | ERJ3GEY0R00 | M.RESISTOR CH 1/16W 0 | 2 | |
| R4309 | ERJ3GEY0R00 | M.RESISTOR CH 1/16W 0 | 1 | |
| R4311 | ERJ3GEY0R00 | M.RESISTOR CH 1/16W 0 | 1 | |
| | | MISCELLANEOUS | | |
| | VMP8003 | REAR P.C.B.FIX ANGLE | 1 | |
| | XQN16+B4FN | SCREW | 2 | |
| ■ E13 | VEP001E8A | R-SIDE FPC C.B.A. | 1 | (RTL) |

| Ref.No. | Part No. | Part Name & Description | Pcs | Remarks |
|---|---|---|---|---|
| P1 | K1KA60A00148 | CONNECTOR (MALE) | 1 | |
| ■ E14 | VEP06F68A | R-SIDE C.B.A. | 1 | (RTL) |
| B6401 | VSB0407 | BATTERY | 1 | |
| C6402-06 | F1L1E1060018 | C.CAPACITOR CH 25V 10U | 5 | |
| D6401 | B0JDAD000001 | DIODE | 1 | |
| D6402 | MA3S781D0L | DIODE | 1 | |
| D6403,04 | B0JDAD000001 | DIODE | 2 | |
| D6405,06 | MA3S781D0L | DIODE | 2 | |
| D6407 | B0JDAD000001 | DIODE | 1 | |
| P6401 | VJP3172D002 | CONNECTOR (MALE) | 1 | K1KA02B00051 |
| P6402 | VJS3791D016 | CONNECTOR (FEMALE) | 1 | |
| P6403 | K1MN61B00001 | CONNECTOR | 1 | |
| P6404 | K1MN27B00053 | CONNECTOR | 1 | |
| P6405 | K1KA02B00053 | CONNECTOR (MALE) | 1 | |
| R6401 | ERJ3GEYJ331 | M.RESISTOR CH 1/16W 330 | 1 | |
| SW6401-05 | EVQPLPA08 | SWITCH | 5 | |
| SW6406-13 | K0H1BA000442 | SWITCH | 8 | |
| SW6414 | K0D112B00055 | SWITCH | 1 | |
| ■ E15 | VEP06F64A | CAMERA OP C.B.A. | 1 | (RTL) |
| P6001 | VJS3791D016 | CONNECTOR (FEMALE) | 1 | |
| P6002 | K1MN06B00013 | CONNECTOR | 1 | |
| SW6001-05 | EVQPLPA08 | SWITCH | 5 | |
| ■ E16 | VEP001E1A | LCD OPEN C.B.A. | 1 | (RTL) |
| SW101 | K0L1BA000015 | SWITCH | 1 | |
| | | MISCELLANEOUS | | |
| | VEE0Z35 | LCD OPEN HARNESS | 1 | |
| | VMP8017 | LCD SW ANGLE | 1 | |
| | XQN16+B3FN | SCREW | 1 | |
| ■ E17 | VEP001E4A | TALLY C.B.A. | 1 | (RTL) |
| D401 | B3AAB0000129 | LED | 1 | |
| R401 | ERJ3GEYJ181 | M.RESISTOR CH 1/16W 180 | 1 | |
| ■ E18 | VEP001E0A | EVF CON C.B.A. | 1 | (RTL) |

Components identified with the mark ⚠ have special characteristics for safety.
When replacing any of these component, use only the same type.

| Ref.No. | Part No. | Part Name & Description | Pcs | Remarks |
|---|---|---|---|---|
| P1 | K1MN18B00048 | CONNECTOR | 1 | |
| P2 | K1MN07B00070 | CONNECTOR | 1 | |
| P3 | K1MN31B00015 | CONNECTOR | 1 | |
| ■ E19 | VEP04828A | MIC U C.B.A. | 1 | (RTL) |
| C4801-04 | F1G1C223A004 | C.CAPACITOR CH 16V 0.022U | 4 | |
| C4806 | ECJ0EB1E102K | C.CAPACITOR CH 25V 1000P | 1 | |
| C4808 | ECJ0EB1E102K | C.CAPACITOR CH 25V 1000P | 1 | |
| C4809 | F1G1C223A004 | C.CAPACITOR CH 16V 0.022U | 1 | |
| C4810 | ECUX1A224KBV | C.CAPACITOR CH 10V 0.22U | 1 | |
| C4811 | F1G1C223A004 | C.CAPACITOR CH 16V 0.022U | 1 | |
| C4812 | ECUX1A224KBV | C.CAPACITOR CH 10V 0.22U | 1 | |
| C4813 | F3E0J106A005 | T.CAPACITOR CH6.3V 10U | 1 | |
| C4814 | ECST0JY226 | T.CAPACITOR CH6.3V 22U | 1 | |
| FP4801 | K1MN07B00072 | CONNECTOR | 1 | |
| IC4801 | C0ABCB000051 | IC | 1 | |
| M4801-04 | WM-61B102A | ECM | 4 | |
| Q4801 | 2SD2216J | TRANSISTOR | 1 | |
| R4801-04 | ERJ6GEYG392 | M.RESISTOR CH 1/10W 3.9K | 4 | |
| R4805-12 | ERJ2GEJ273 | M.RESISTOR CH 1/16W 27K | 8 | |
| R4813 | ERJ2GEJ223 | M.RESISTOR CH 1/16W 22K | 1 | |
| R4814 | ERJ2GEJ333 | M.RESISTOR CH 1/16W 33K | 1 | |
| R4815 | ERJ2GEJ472 | M.RESISTOR CH 1/16W 4.7K | 1 | |
| | | MISCELLANEOUS | | |
| | VMT1249 | MIC DUNPER | 1 | |
| ■ E20 | VEP28272B | EVF A C.B.A. | 1 | (RTL) |
| REF1 | K1MN16B00039 | CONNECTOR | 1 | |
| REF2 | K1MN19B00029 | CONNECTOR | 1 | |
| ■ E21 | VEP28275B | EVF B C.B.A. | 1 | (RTL) |
| REF1 | A2CD00000030 | TRANSISTOR | 1 | |
| REF2 | B1DFCL000006 | TRANSISTOR | 1 | |
| REF3 | ETJ11K90AM | TRANSFORMER | 1 | |
| REF4 | F1L1A2260013 | C.CAPACITOR CH 10V 22U | 1 | |
| REF5 | G1C100KA0005 | COIL 10UH | 1 | |
| ■ E22 | VEP001G2A | MENU FPC C.B.A. | 1 | (RTL) |
| SW1 | EVQPLPA08 | SWITCH | 1 | |
| VR1 | K9AA01500005 | SWITCH | 1 | |
| | | MISCELLANEOUS | | |

| Ref.No. | Part No. | Part Name & Description | Pcs | Remarks |
|---|---|---|---|---|
| | VMP8020 | CAM OP ANGLE | 1 | |
| | XQN16+B3FN | SCREW | 2 | |
| ■ E23 | VEP26257B | MONITOR C.B.A. | 1 | (RTL) |
| ■ | VEP06E80A | HALL SENSOR FLEX C.B.A. | 1 | (RTL)FOR VEP26257B |
| C901 | ECJ0EB1A104K | C.CAPACITOR CH 10V 0.1U | 1 | |
| C902 | F3F0G476A009 | T.CAPACITOR CH 4V 47U | 1 | |
| C903 | F3F0J226A007 | T.CAPACITOR CH6.3V 22U | 1 | |
| C905,06 | ECJ4YB1C106V | C.CAPACITOR CH 16V 10U | 2 | |
| C907 | F3F0J335A008 | T.CAPACITOR CH6.3V 3.3U | 1 | |
| C908,09 | ECJ0WB1C103K | C.CAPACITOR CH 16V 0.01U | 2 | |
| C910-13 | F1H0J474A002 | C.CAPACITOR CH6.3V 0.47U | 4 | |
| C914 | ECJ0EB1A104K | C.CAPACITOR CH 10V 0.1U | 1 | |
| C915 | ECJ1ZB1C104K | C.CAPACITOR CH 16V 0.1U | 1 | |
| C916-19 | ECJ0WB1C103K | C.CAPACITOR CH 16V 0.01U | 4 | |
| C923 | ECJ1VC1H471G | C.CAPACITOR CH 50V 470P | 1 | |
| C925 | ECST1AY106Z | T.CAPACITOR CH 10V 10U | 1 | |
| C930 | ECJ0EB1A104K | C.CAPACITOR CH 10V 0.1U | 1 | |
| C931 | ECJ0EC1H330J | C.CAPACITOR CH 50V 33P | 1 | |
| C932 | ECJ0EC1H221J | C.CAPACITOR CH 50V 220P | 1 | |
| C933 | ECJ2YB1C474K | C.CAPACITOR CH 16V 0.47U | 1 | |
| C934 | ECJ0WB1C103K | C.CAPACITOR CH 16V 0.01U | 1 | |
| C935 | ECJ0EB1C682K | C.CAPACITOR CH 16V 6800P | 1 | |
| C936,37 | ECJ0EB1A104K | C.CAPACITOR CH 10V 0.1U | 2 | |
| C938 | ECJ0EC1H101J | C.CAPACITOR CH 50V 100P | 1 | |
| C939 | ECJ1VC1H331G | C.CAPACITOR CH 50V 330P | 1 | |
| C940 | ECJ0EC1H560J | C.CAPACITOR CH 50V 56P | 1 | |
| C941 | F1G1H100A448 | C.CAPACITOR CH 50V 10P | 1 | |
| C942 | ECJ2YB1A105K | C.CAPACITOR CH 10V 1U | 1 | |
| C943,44 | ECJ1VB1A224K | T.CAPACITOR CH 10V 0.22U | 2 | |
| C945 | ECJ0EB1E332K | C.CAPACITOR CH 25V 3300P | 1 | |
| C946 | ECJ4YB1C106V | C.CAPACITOR CH 16V 10U | 1 | |
| C947,48 | ECJ1ZB1C104K | C.CAPACITOR CH 16V 0.1U | 2 | |
| C949 | ECJ0WB1C103K | C.CAPACITOR CH 16V 0.01U | 1 | |
| C950 | F1J1C105A091 | C.CAPACITOR CH 16V 1U | 1 | |
| C952 | ECJ1ZB1C104K | C.CAPACITOR CH 16V 0.1U | 1 | |
| D901 | MA338 | DIODE | 1 | MA2X338 |
| D902 | MA6Z12100L | DIODE | 1 | |
| D903 | MA3S132D0L | DIODE | 1 | |
| D904 | MA4X159A0L | DIODE | 1 | |
| D905,06 | B0JCEE000002 | DIODE | 2 | |
| D907 | MA111 | DIODE | 1 | |
| D908 | MAZ80270LL | DIODE | 1 | |
| D909 | MA8043-M | DIODE | 1 | |
| D910 | B0BC6R100014 | DIODE | 1 | |
| FP901 | K1MN24B00068 | CONNECTOR | 1 | |
| FP903 | K1MN25B00035 | CONNECTOR | 1 | |
| IC901 | C0HBA0000071 | IC | 1 | |
| IC903 | C0JBAB000350 | IC | 1 | |
| IC904 | C0JBAB000391 | IC | 1 | |
| IC905 | SN74LV04APW | IC | 1 | C0JBAB000247 |
| IC991 | DN8797MSC | IC | 1 | FOR VEP26257B |
| L901-04 | VLQ0807K100 | COIL 10UH | 4 | G1C100K00024 |
| L905 | G1C100MA0031 | COIL 10UH | 1 | |
| L907 | VLQ0426J3R3 | COIL 3.3UH | 1 | G1C3R3J00009 |
| Q901 | B1ADCF000059 | TRANSISTOR | 1 | |
| Q902 | B1CFNG000001 | TRANSISTOR | 1 | |
| Q903 | XP0460100L | TRANSISTOR | 1 | |
| Q904 | XP1501 | TRANSISTOR-RESISTOR | 1 | |
| Q905 | B1ACGD000006 | TRANSISTOR | 1 | |
| Q906-08 | XP0460100L | TRANSISTOR | 3 | |
| QR901,02 | B1GBCFNA0014 | TRANSISTOR | 2 | |

Components identified with the mark ⚠ have special characteristics for safety.
When replacing any of these component, use only the same type.

| Ref.No. | Part No. | Part Name & Description | Pcs | Remarks |
|---|---|---|---|---|
| QR903 | B1GBCFJN0017 | TRANSISTOR | 1 | |
| QR904 | UNR9214J0L | TRANSISTOR | 1 | |
| | | | | |
| R901-03 | ERJ2GEJ821 | M.RESISTOR CH 1/16W 820 | 3 | |
| R904 | ERJ2RHD333 | M.RESISTOR CH 1/16W 33K | 1 | |
| R905 | ERJ2RHD153 | M.RESISTOR CH 1/16W 15K | 1 | |
| R906 | ERJ2GEJ333 | M.RESISTOR CH 1/16W 33K | 1 | |
| R907-09 | ERJ2GEJ102 | M.RESISTOR CH 1/16W 1K | 3 | |
| R910,11 | ERJ2GEJ332 | M.RESISTOR CH 1/16W 3.3K | 2 | |
| R912-14 | ERJ2GEJ101 | M.RESISTOR CH 1/16W 100 | 3 | |
| R918 | ERJ2GEJ102 | M.RESISTOR CH 1/16W 1K | 1 | |
| R919 | ERJ2GEJ103 | M.RESISTOR CH 1/16W 10K | 1 | |
| R920 | ERJ2GEJ332 | M.RESISTOR CH 1/16W 3.3K | 1 | |
| R921 | ERJ2GEJ473 | M.RESISTOR CH 1/16W 47K | 1 | |
| R922 | ERJ2GEJ272 | M.RESISTOR CH 1/16W 2.7K | 1 | |
| R923 | ERJ2GEJ103 | M.RESISTOR CH 1/16W 10K | 1 | |
| R924 | ERJ2GEJ102 | M.RESISTOR CH 1/16W 1K | 1 | |
| R925 | ERJ2RHD104 | M.RESISTOR CH 1/16W 100K | 1 | |
| R926 | ERJ2GEJ332 | M.RESISTOR CH 1/16W 3.3K | 1 | |
| R927 | ERJ2GEJ124 | M.RESISTOR CH 1/16W 120K | 1 | |
| R928 | ERJ2GEJ473 | M.RESISTOR CH 1/16W 47K | 1 | |
| R929 | ERJ2RHD273 | M.RESISTOR CH 1/16W 27K | 1 | |
| R930,31 | ERJ2GEJ103 | M.RESISTOR CH 1/16W 10K | 2 | |
| R932 | ERJ2GEJ102 | M.RESISTOR CH 1/16W 1K | 1 | |
| R933 | ERJ2GEJ333 | M.RESISTOR CH 1/16W 33K | 1 | |
| R934 | ERJ2RHD272 | M.RESISTOR CH 1/16W 2.7K | 1 | |
| R935 | ERJ2RHD273 | M.RESISTOR CH 1/16W 27K | 1 | |
| R936 | ERJ2GEJ102 | M.RESISTOR CH 1/16W 1K | 1 | |
| R937 | ERJ2GEJ182 | M.RESISTOR CH 1/16W 1.8K | 1 | |
| R938 | ERJ2GEJ104 | M.RESISTOR CH 1/16W 100K | 1 | |
| R940 | ERJ2GEJ153 | M.RESISTOR CH 1/16W 15K | 1 | |
| R941-43 | ERJ2GEJ103 | M.RESISTOR CH 1/16W 10K | 3 | |
| R944 | ERJ2GEJ394 | M.RESISTOR CH 1/16W 390K | 1 | |
| R945 | ERJ2RHD273 | M.RESISTOR CH 1/16W 27K | 1 | |
| R946 | ERJ2RHD823 | M.RESISTOR CH 1/16W 82K | 1 | |
| R947 | ERJ2RHD393 | M.RESISTOR CH 1/16W 39K | 1 | |
| R951 | ERJ2GEJ560 | M.RESISTOR CH 1/16W 56 | 1 | |
| R952 | ERJ2GEJ472 | M.RESISTOR CH 1/16W 4.7K | 1 | |
| R953 | ERJ3GEYJ823 | M.RESISTOR CH 1/16W 82K | 1 | |
| R954 | ERJ3GEY0R00 | M.RESISTOR CH 1/16W 0 | 1 | |
| R955 | ERJ3RBD333 | M.RESISTOR CH 1/16W 33K | 1 | |
| R956 | ERJ3RBD103 | M.RESISTOR CH 1/16W 10K | 1 | |
| R957 | ERJ3RBD101 | M.RESISTOR CH 1/16W 100 | 1 | |
| R958 | ERJ2GEJ153 | M.RESISTOR CH 1/16W 15K | 1 | |
| R959 | ERJ2GEJ272 | M.RESISTOR CH 1/16W 2.7K | 1 | |
| R960 | ERJ2GEJ223 | M.RESISTOR CH 1/16W 22K | 1 | |
| R961 | ERJ2GEJ153 | M.RESISTOR CH 1/16W 15K | 1 | |
| R962 | ERJ2GEJ561 | M.RESISTOR CH 1/16W 560 | 1 | |
| R963 | ERJ2GEJ104 | M.RESISTOR CH 1/16W 100K | 1 | |
| R964 | ERJ2GEJ333 | M.RESISTOR CH 1/16W 33K | 1 | |
| R965,66 | ERJ2GEJ563 | M.RESISTOR CH 1/16W 56K | 2 | |
| R967 | ERJ2GEJ104 | M.RESISTOR CH 1/16W 100K | 1 | |
| R968,69 | ERJ2GEJ333 | M.RESISTOR CH 1/16W 33K | 2 | |
| R970 | ERJ2GEJ562 | M.RESISTOR CH 1/16W 5.6K | 1 | |
| R971 | ERJ3GEYJ335 | M.RESISTOR CH 1/16W 3.3M | 1 | |
| R972 | ERJ2GEJ224 | M.RESISTOR CH 1/16W 220K | 1 | |
| R973,74 | ERJ8GEYJ335 | M.RESISTOR CH 1/8W 3.3M | 2 | |
| R975 | ERJ2GEJ223 | M.RESISTOR CH 1/16W 22K | 1 | |
| R976 | ERJ3RBD681 | M.RESISTOR CH 1/16W 680 | 1 | |
| R977 | ERJ3RED220 | M.RESISTOR CH 1/16W 22 | 1 | |
| R978 | ERJ6GEYJ335 | M.RESISTOR CH 1/10W 3.3M | 1 | |
| R979 | ERJ3GEYJ224 | M.RESISTOR CH 1/16W 220K | 1 | |
| R985,86 | ERJ2GEJ182 | M.RESISTOR CH 1/16W 1.8K | 2 | |
| R989 | ERJ2GEJ104 | M.RESISTOR CH 1/16W 100K | 1 | |
| | | | | |
| T901 | ETJ09K44AZ | TRANSFORMER | 1 | |
| T902 | EFTU21R203 | TRANSFORMER | 1 | |
| | | | | |
| W901 | ERJ3GEY0R00 | M.RESISTOR CH 1/16W 0 | 1 | |
| W902 | ERJ2GE0R00 | M.RESISTOR CH 1/16W 0 | 1 | |

Components identified with the mark ⚠ have special characteristics for safety.
When replacing any of these component, use only the same type.

# AG-DVC30E, AG-DVC32EN, AG-DVC33MC

| Ref.No. | Part No. | Part Name & Description | Pcs | Remarks |
|---|---|---|---|---|
| ■ E1 | VEP01952A | POWER C.B.A. | 1 | (RTL) |
| ■ | VEP001G8A | GYRO SUB C.B.A. | 1 | (RTL)FOR VEP01952A |
| ■ E2 | VEP03G60B | VTR C.B.A. | 1 | (RTL) |
| ■ E3 | VEP23598B | CAMERA C.B.A. | 1 | (RTL) |
| ■ E4 | VEP06F67A | FRONT C.B.A. | 1 | (RTL) |
| ■ E5 | VEP04861A | SIDE JACK FPC C.B.A. | 1 | (RTL) |
| ■ E6 | VEP001G1A | SUB REC C.B.A. | 1 | (RTL) |
| ■ E7 | VEP01957A | DC IN C.B.A. | 1 | (RTL) |
| ■ E8 | VEP01953A | BATTERY C.B.A. | 1 | (RTL) |
| ■ E9 | VEP06F66A | ZOOM FPC C.B.A. | 1 | (RTL) |
| ■ E10 | VEP001E3A | ZOOM CON C.B.A. | 1 | (RTL) |
| ■ E11 | VEP001E5A | CAS OPEN C.B.A. | 1 | (RTL) |
| ■ E12 | VEP04863A | REAR JACK C.B.A. | 1 | (RTL) |
| ■ E13 | VEP001E8A | R-SIDE FPC C.B.A. | 1 | (RTL) |
| ■ E14 | VEP06F68A | R-SIDE C.B.A. | 1 | (RTL) |
| ■ E15 | VEP06F64A | CAMERA OP C.B.A. | 1 | (RTL) |
| ■ E16 | VEP001E1A | LCD OPEN C.B.A. | 1 | (RTL) |
| ■ E17 | VEP001E4A | TALLY C.B.A. | 1 | (RTL) |
| ■ E18 | VEP001E0A | EVF CON C.B.A. | 1 | (RTL) |
| ■ E19 | VEP04828A | MIC U C.B.A. | 1 | (RTL) |
| ■ E20 | VEP28272B | EVF A C.B.A. | 1 | (RTL) |
| ■ E21 | VEP28275B | EVF B C.B.A. | 1 | (RTL) |
| ■ E22 | VEP001G2A | MENU FPC C.B.A. | 1 | (RTL) |
| ■ E23 | VEP26257B | MONITOR C.B.A. | 1 | (RTL) |
| ■ | VEP06E80A | HALL SENSOR FLEX C.B.A. | 1 | (RTL)FOR VEP26257B |

| Ref.No. | Part No. | Part Name & Description | Pcs | Remarks |
|---|---|---|---|---|
| ■ E1 | VEP01952A | POWER C.B.A. | 1 | (RTL) |
| ■ | VEP001G8A | GYRO SUB C.B.A. | 1 | (RTL)FOR VEP01952A |
| C1001,02 | ECJ2FB1A475K | C.CAPACITOR CH 10V 4.7U | 2 | |
| C1004 | F1H1H104A783 | C.CAPACITOR CH 50V 0.1U | 1 | |
| C1005,06 | ECJ2FB1A475K | C.CAPACITOR CH 10V 4.7U | 2 | |
| C1007-09 | ECJ0EB1A104K | C.CAPACITOR CH 10V 0.1U | 3 | |
| C1011 | ECJ2YB1A105K | C.CAPACITOR CH 10V 1U | 1 | |
| C1012 | F1J0J106A014 | T.CAPACITOR CH6.3V 10U | 1 | |
| C1021 | ECJ2YB1A105K | C.CAPACITOR CH 10V 1U | 1 | |
| C1022 | F1J0J106A014 | T.CAPACITOR CH6.3V 10U | 1 | |
| C1041 | ECJ2YB1A105K | C.CAPACITOR CH 10V 1U | 1 | |
| C1042 | F1J0J106A014 | T.CAPACITOR CH6.3V 10U | 1 | |
| C1051 | ECJ2YB1A105K | C.CAPACITOR CH 10V 1U | 1 | |
| C1052 | F1L1E1060018 | C.CAPACITOR CH 25V 10U | 1 | |
| C1053-55 | F1G1H2210001 | C.CAPACITOR CH 50V 220P | 3 | |
| C1057 | F1G1H2210001 | C.CAPACITOR CH 50V 220P | 1 | |
| C1058 | ECJ2FB1E105K | C.CAPACITOR CH 25V 1U | 1 | |
| C1061,62 | F1J1A335A003 | C.CAPACITOR CH 10V 3.3U | 2 | |
| C1063,64 | ECJ0EB1A104K | C.CAPACITOR CH 10V 0.1U | 2 | |
| C1071,72 | ECJ1VB1C105K | C.CAPACITOR CH 16V 1U | 2 | |
| C1101 | ECJ0EB1A104K | C.CAPACITOR CH 10V 0.1U | 1 | |
| C1102 | ECJ0EC1H151J | C.CAPACITOR CH 50V 150P | 1 | |
| C1103 | ECJ0EB1A683K | C.CAPACITOR CH 10V 0.068U | 1 | |
| C1106 | ECJ1VB0J105K | C.CAPACITOR CH 35V 1M | 1 | |
| C1112 | ECJ0EB1A473K | C.CAPACITOR CH 10V 0.047U | 1 | |
| C1113 | F1G1C333A004 | C.CAPACITOR CH 16V 0.033U | 1 | |
| C1115 | ECJ0EB1E471K | C.CAPACITOR CH 25V 470P | 1 | |
| C1123 | ECJ0EB1A473K | C.CAPACITOR CH 10V 0.047U | 1 | |
| C1126 | ECJ0EB1E331K | C.CAPACITOR CH 25V 330P | 1 | |
| C1142 | ECJ0EB1A104K | C.CAPACITOR CH 10V 0.1U | 1 | |
| C1145 | ECJ0EB1E222K | C.CAPACITOR CH 25V 2200P | 1 | |
| C1146 | ECJ0EB1E331K | C.CAPACITOR CH 25V 330P | 1 | |
| C1151 | ECJ1ZB1H103K | C.CAPACITOR CH 50V 0.01U | 1 | |
| C1152 | ECUX1E473KBV | C.CAPACITOR CH 25V 0.047U | 1 | |
| C1154 | ECJ0WB1C103K | C.CAPACITOR CH 16V 0.01U | 1 | |
| C1157 | ECJ0WB1C103K | C.CAPACITOR CH 16V 0.01U | 1 | |
| C1211,12 | F1H1A105A028 | C.CAPACITOR CH 10V 1U | 2 | |
| C1221-24 | F1H1A105A028 | C.CAPACITOR CH 10V 1U | 4 | |
| C1226,27 | F1H1A105A028 | C.CAPACITOR CH 10V 1U | 2 | |
| C1228 | F3F1A1060001 | T.CAPACITOR CH 10V 10U | 1 | |
| C1241 | F1H1A105A028 | C.CAPACITOR CH 10V 1U | 1 | |
| C1249 | F3E0J106A005 | T.CAPACITOR CH6.3V 10U | 1 | |
| C1251,52 | ECJ2FB1E105K | C.CAPACITOR CH 25V 1U | 2 | |
| C1253 | F1H1E154A050 | C.CAPACITOR CH 25V 0.15U | 1 | |
| C1271 | ECJ1VB1C105K | C.CAPACITOR CH 16V 1U | 1 | |
| C1273 | ECJ1VB1C105K | C.CAPACITOR CH 16V 1U | 1 | |
| C1322,23 | F1H1A105A028 | C.CAPACITOR CH 10V 1U | 2 | |
| C1328 | F1J0J475A008 | C.CAPACITOR CH6.3V 4.7U | 1 | |
| C1341 | F1H1A105A028 | C.CAPACITOR CH 10V 1U | 1 | |
| C1342 | F3E0J106A005 | T.CAPACITOR CH6.3V 10U | 1 | |
| C1343 | F1H1A105A028 | C.CAPACITOR CH 10V 1U | 1 | |
| C1344 | F3E0J106A005 | T.CAPACITOR CH6.3V 10U | 1 | |
| C1503 | ECJ0WB1C103K | C.CAPACITOR CH 16V 0.01U | 1 | |
| C1603 | ECJ0WB1C103K | C.CAPACITOR CH 16V 0.01U | 1 | |
| C1604 | ECJ0EB1A104K | C.CAPACITOR CH 10V 0.1U | 1 | |
| C1605 | ECJ0EC1H101J | C.CAPACITOR CH 50V 100P | 1 | |
| C1606 | ECJ0EB1A683K | C.CAPACITOR CH 10V 0.068U | 1 | |
| C1608 | F1H1H104A783 | C.CAPACITOR CH 50V 0.1U | 1 | |
| C1610 | ECJ0EC1H390J | C.CAPACITOR CH 50V 39P | 1 | |
| C1615 | ECJ0EB1A104K | C.CAPACITOR CH 10V 0.1U | 1 | |
| C1616 | ECJ0WB1C103K | C.CAPACITOR CH 16V 0.01U | 1 | |
| C1619 | ECJ0EB1E222K | C.CAPACITOR CH 25V 2200P | 1 | |
| C1620 | ECJ0EB1E331K | C.CAPACITOR CH 25V 330P | 1 | |
| C1621 | ECJ2FB1A475K | C.CAPACITOR CH 10V 4.7U | 1 | |
| C1622 | ECJ2YB1A105K | C.CAPACITOR CH 10V 1U | 1 | |
| C1623 | F1J0J106A014 | T.CAPACITOR CH6.3V 10U | 1 | |
| C1627,28 | ECJ1VB0J105K | C.CAPACITOR CH 35V 1M | 2 | |
| C1635 | ECJ2YB1A105K | C.CAPACITOR CH 10V 1U | 1 | |
| C1636 | F1J0J106A014 | T.CAPACITOR CH6.3V 10U | 1 | |
| C1901 | F3F1A226A001 | T.CAPACITOR CH 10V 22U | 1 | |
| C1902 | ECST0JY226 | T.CAPACITOR CH6.3V 22U | 1 | |
| C1911,12 | F1J0J106A014 | T.CAPACITOR CH6.3V 10U | 2 | |

Components identified with the mark ⚠ have special characteristics for safety.
When replacing any of these component, use only the same type.

| Ref.No. | Part No. | Part Name & Description | Pcs | Remarks |
|---|---|---|---|---|
| C1925 | ECJ0EB1E471K | C.CAPACITOR CH 25V 470P | 1 | |
| C1927 | ECUX1A105KBV | C.CAPACITOR CH 10V 1U | 1 | |
| C1929 | ECJ0EB1E471K | C.CAPACITOR CH 25V 470P | 1 | |
| C1930 | ECJ0EB1A104K | C.CAPACITOR CH 10V 0.1U | 1 | |
| C1931 | F3G1C2260001 | T.CAPACITOR CH 16V 22U | 1 | |
| | | | | |
| D1003 | NSD03A20 | DIODE | 1 | |
| D1005 | MA8130-M | DIODE | 1 | |
| D1011 | B0JCMC000004 | DIODE | 1 | |
| D1021 | B0JCMC000004 | DIODE | 1 | |
| D1041 | B0JCMC000004 | DIODE | 1 | |
| D1051 | MA2YD1700L | DIODE | 1 | |
| D1052 | MA2Z00100L | DIODE | 1 | |
| D1071 | MA111 | DIODE | 1 | |
| D1072 | MA2Z00100L | DIODE | 1 | |
| D1101 | MA8100-M | DIODE | 1 | |
| D1102 | MA2S11100L | DIODE | 1 | |
| D1131 | MA2S11100L | DIODE | 1 | |
| D1251 | MAZ81800HL | DIODE | 1 | |
| D1252 | MA2S11100L | DIODE | 1 | |
| D1528 | MA2S11100L | DIODE | 1 | |
| D1602 | B0JCMC000004 | DIODE | 1 | |
| D1608 | B0JCMC000004 | DIODE | 1 | |
| D1610 | MA2S11100L | DIODE | 1 | |
| D1681 | B0ADDJ000011 | DIODE | 1 | |
| D1682 | MA2S11100L | DIODE | 1 | |
| D1683 | MAZ80620HL | DIODE | 1 | |
| D1684 | MA3S132E0L | DIODE | 1 | |
| D1685 | B0BC4R200013 | DIODE | 1 | |
| | | | | |
| IC1001 | C0DBAZZ00064 | IC | 1 | |
| IC1321 | C0CBCAC00061 | IC | 1 | |
| IC1601 | C0DBAZZ00064 | IC | 1 | |
| IC1901 | L2ES00000010 | SENSOR UNIT | 1 | FOR VEP001G8A |
| IC1922 | C0ABBA000077 | IC | 1 | |
| IC1923 | C0JBAS000063 | IC | 1 | |
| | | | | |
| ⚠ IP1001 | K5H3122A0022 | FUSE | 1 | |
| ⚠ IP1003 | K5H8011A0004 | FUSE | 1 | |
| | | | | |
| L1001 | G1C3R9MA0024 | COIL 3.9UH | 1 | |
| L1005 | J0JHC0000018 | FILTER | 1 | |
| L1006 | J0MAB0000060 | FILTER | 1 | |
| L1011 | G1C330MA0011 | COIL 33UH | 1 | |
| L1021 | G1C220MA0011 | COIL 22UH | 1 | |
| L1041 | G1C330MA0011 | COIL 33UH | 1 | |
| L1061 | G1C330MA0085 | COIL 33UH | 1 | |
| L1062 | G1C181MA0024 | COIL 180UH | 1 | |
| L1111 | J0JAC0000011 | FILTER | 1 | |
| L1121 | J0JAC0000011 | FILTER | 1 | |
| L1141 | J0JAC0000011 | FILTER | 1 | |
| L1151 | J0JAC0000011 | FILTER | 1 | |
| L1211,12 | G1C4R7MA0072 | COIL 4.7UH | 2 | |
| L1221 | G1C4R7MA0072 | COIL 4.7UH | 1 | |
| L1222 | G1C4R7MA0073 | COIL 4.7UH | 1 | |
| L1223,24 | G1C4R7MA0076 | COIL 4.7UH | 2 | |
| L1226,27 | G1C4R7MA0073 | COIL 4.7UH | 2 | |
| L1241 | G1C4R7MA0072 | COIL 4.7UH | 1 | |
| L1251-53 | G1C100KA0055 | COIL 10UH | 3 | |
| L1271,72 | G1C100KA0055 | COIL 10UH | 2 | |
| L1321,22 | G1C4R7MA0076 | COIL 4.7UH | 2 | |
| L1341,42 | G1C4R7MA0073 | COIL 4.7UH | 2 | |
| L1602 | G1C331M00006 | COIL 330UH | 1 | |
| L1604,05 | G1C4R7MA0076 | COIL 4.7UH | 2 | |
| L1609 | A921CY-470M | FILTER | 1 | |
| L1610 | J0JAC0000011 | FILTER | 1 | |
| L1612 | J0JAC0000011 | FILTER | 1 | |
| L1901 | G1C100K00019 | COIL 10UH | 1 | |
| L1922,23 | G1C100K00019 | COIL 10UH | 2 | |
| | | | | |
| P1001 | K1KA03A00462 | CONNECTOR (MALE) | 1 | |
| P1011 | K1KA80A00037 | CONNECTOR | 1 | |
| | | | | |
| Q1003 | B2ABGP000001 | THYRISTOR | 1 | |
| Q1011 | B1DHCC000035 | TRANSISTOR | 1 | |
| | | | | |
| | | | | |

| Ref.No. | Part No. | Part Name & Description | Pcs | Remarks |
|---|---|---|---|---|
| Q1021 | B1DHCC000035 | TRANSISTOR | 1 | |
| Q1022 | B1DFCD000012 | TRANSISTOR | 1 | |
| Q1041 | B1DHCC000035 | TRANSISTOR | 1 | |
| Q1042 | B1DFCD000012 | TRANSISTOR | 1 | |
| Q1051 | B1DFCG000011 | TRANSISTOR | 1 | |
| Q1061,62 | FP102 | TRANSISTOR | 2 | |
| Q1601,02 | B1DHCC000035 | TRANSISTOR | 2 | |
| Q1611 | B1DHCC000035 | TRANSISTOR | 1 | |
| Q1612 | B1DFCD000012 | TRANSISTOR | 1 | |
| | | | | |
| QR1001 | UNR9113J0L | TRANSISTOR | 1 | |
| QR1101 | UNR9214J0L | TRANSISTOR | 1 | |
| QR1102 | UNR911DJ0L | TRANSISTOR | 1 | |
| QR1601 | UNR9113J0L | TRANSISTOR | 1 | |
| QR1602,03 | UN9213 | TRANSISTOR-RESISTOR | 2 | |
| QR1681 | UN9115 | TRANSISTOR-RESISTOR | 1 | |
| | | | | |
| R1002 | ERJ6GEY0R00 | M.RESISTOR CH 1/10W 0 | 1 | D0YDR0000005 |
| R1005 | ERJ2GEJ471 | M.RESISTOR CH 1/16W 470 | 1 | |
| R1006 | ERJ2GEJ103 | M.RESISTOR CH 1/16W 10K | 1 | |
| R1017 | ERJ3GEY0R00 | M.RESISTOR CH 1/16W 0 | 1 | |
| R1047 | ERJ3GEY0R00 | M.RESISTOR CH 1/16W 0 | 1 | |
| R1052,53 | ERJ6GEYG271 | M.RESISTOR CH 1/10W 270 | 2 | |
| R1056,57 | ERJ6GEYG220 | M.RESISTOR CH 1/10W 22 | 2 | D0GD220JA003 |
| R1058 | ERJ3GEY0R00 | M.RESISTOR CH 1/16W 0 | 1 | |
| R1101 | ERJ3RBD103 | M.RESISTOR CH 1/16W 10K | 1 | |
| R1105 | ERJ2GEJ103 | M.RESISTOR CH 1/16W 10K | 1 | |
| R1106 | ERJ2GE0R00 | M.RESISTOR CH 1/16W 0 | 1 | |
| R1107 | ERJ6GEY0R00 | M.RESISTOR CH 1/10W 0 | 1 | D0YDR0000005 |
| R1108,09 | ERJ2RHD272 | M.RESISTOR CH 1/16W 2.7K | 2 | |
| R1111 | ERJ2RHD272 | M.RESISTOR CH 1/16W 2.7K | 1 | |
| R1115 | ERJ2RHD822 | M.RESISTOR CH 1/16W 8.2K | 1 | |
| R1116 | ERJ2RHD272 | M.RESISTOR CH 1/16W 2.7K | 1 | |
| R1117 | ERJ2RKD680 | M.RESISTOR CH 1/16W 68 | 1 | |
| R1119 | ERJ2GE0R00 | M.RESISTOR CH 1/16W 0 | 1 | |
| R1121 | ERJ2GEJ152 | M.RESISTOR CH 1/16W 1.5K | 1 | |
| R1125 | ERJ2RHD392 | M.RESISTOR CH 1/16W 3.9K | 1 | |
| R1126 | ERJ2RHD272 | M.RESISTOR CH 1/16W 2.7K | 1 | |
| R1127 | ERJ2RHD151 | M.RESISTOR CH 1/16W 150 | 1 | |
| R1128,29 | ERJ2GE0R00 | M.RESISTOR CH 1/16W 0 | 2 | |
| R1141 | ERJ2GEJ102 | M.RESISTOR CH 1/16W 1K | 1 | |
| R1145 | ERJ2RHD182 | M.RESISTOR CH 1/16W 1.8K | 1 | |
| R1146 | ERJ2RHD272 | M.RESISTOR CH 1/16W 2.7K | 1 | |
| R1147 | ERJ2RHD151 | M.RESISTOR CH 1/16W 150 | 1 | |
| R1148,49 | ERJ2GE0R00 | M.RESISTOR CH 1/16W 0 | 2 | |
| R1151 | ERJ2RHD153 | M.RESISTOR CH 1/16W 15K | 1 | |
| R1152 | ERJ2GEJ152 | M.RESISTOR CH 1/16W 1.5K | 1 | |
| R1153 | ERJ2RHD223 | M.RESISTOR CH 1/16W 22K | 1 | |
| R1154 | ERJ2GE0R00 | M.RESISTOR CH 1/16W 0 | 1 | |
| R1157 | ERJ2RHD333 | M.RESISTOR CH 1/16W 33K | 1 | |
| R1158 | ERJ2RHD272 | M.RESISTOR CH 1/16W 2.7K | 1 | |
| R1159 | ERJ2RHD101 | M.RESISTOR CH 1/16W 100 | 1 | |
| R1241 | ERJ2GE0R00 | M.RESISTOR CH 1/16W 0 | 1 | |
| R1251 | ERJ2GEJ103 | M.RESISTOR CH 1/16W 10K | 1 | |
| R1402 | ERJ2GEJ102 | M.RESISTOR CH 1/16W 1K | 1 | |
| R1501 | ERJ2RHD683 | M.RESISTOR CH 1/16W 68K | 1 | |
| R1503 | ERJ2GEJ222 | M.RESISTOR CH 1/16W 2.2K | 1 | |
| ⚠ R1524 | K5H6312A0008 | FUSE | 1 | |
| ⚠ R1525 | K5H1222A0008 | FUSE | 1 | |
| ⚠ R1526 | K5H6312A0008 | FUSE | 1 | |
| R1601 | ERJ2RHD472 | M.RESISTOR CH 1/16W 4.7K | 1 | |
| R1602 | ERJ2RHD151 | M.RESISTOR CH 1/16W 150 | 1 | |
| R1603 | ERJ2RHD272 | M.RESISTOR CH 1/16W 2.7K | 1 | |
| R1605 | ERJ2GE0R00 | M.RESISTOR CH 1/16W 0 | 1 | |
| R1607 | ERJ2GEJ562 | M.RESISTOR CH 1/16W 5.6K | 1 | |
| R1608 | ERJ3RBD243 | M.RESISTOR CH 1/16W 24K | 1 | |
| R1612 | ERJ2GEJ102 | M.RESISTOR CH 1/16W 1K | 1 | |
| R1618 | ERJ3GEY0R00 | M.RESISTOR CH 1/16W 0 | 1 | |
| R1619 | ERJ2GEJ473 | M.RESISTOR CH 1/16W 47K | 1 | |
| R1621 | ERJ2GEJ153 | M.RESISTOR CH 1/16W 15K | 1 | |
| ⚠ R1625 | K5H1021A0004 | IC | 1 | |
| R1627,28 | ERJ3GEY0R00 | M.RESISTOR CH 1/16W 0 | 2 | |
| R1630,31 | ERJ2GE0R00 | M.RESISTOR CH 1/16W 0 | 2 | |
| R1634 | ERJ6GEY0R00 | M.RESISTOR CH 1/10W 0 | 1 | D0YDR0000005 |
| R1635,36 | ERJ2GE0R00 | M.RESISTOR CH 1/16W 0 | 2 | |
| | | | | |
| | | | | |

Components identified with the mark ⚠ have special characteristics for safety.
When replacing any of these component, use only the same type.

| Ref.No. | Part No. | Part Name & Description | Pcs | Remarks |
|---|---|---|---|---|
| R1638 | ERJ2RHD821 | M.RESISTOR CH 1/16W 820 | 1 | |
| R1639 | ERJ2RHD271 | M.RESISTOR CH 1/16W 270 | 1 | |
| R1640 | ERJ2RHD272 | M.RESISTOR CH 1/16W 2.7K | 1 | |
| R1641 | ERJ2GE0R00 | M.RESISTOR CH 1/16W 0 | 1 | |
| R1643 | ERJ2GE0R00 | M.RESISTOR CH 1/16W 0 | 1 | |
| R1681 | ERJ2GEJ151 | M.RESISTOR CH 1/16W 150 | 1 | |
| R1682 | ERJ2GEJ222 | M.RESISTOR CH 1/16W 2.2K | 1 | |
| R1901 | ERJ2GEJ103 | M.RESISTOR CH 1/16W 10K | 1 | |
| R1912 | ERJ2GEJ474 | M.RESISTOR CH 1/16W 470K | 1 | |
| R1925 | ERJ2GEJ474 | M.RESISTOR CH 1/16W 470K | 1 | |
| R1926 | ERJ2GEJ472 | M.RESISTOR CH 1/16W 4.7K | 1 | |
| R1928 | ERJ2GEJ274 | M.RESISTOR CH 1/16W 270K | 1 | |
| R1929 | ERJ2GE0R00 | M.RESISTOR CH 1/16W 0 | 1 | |
| R1930 | ERJ2GEJ105 | M.RESISTOR CH 1/16W 1M | 1 | |
| | | | | |
| T1051 | G5D1A0000033 | TRANSFORMER | 1 | |
| | | | | |
| | | MISCELLANEOUS | | |
| | | | | |
| | VMP8005 | POWER PCB HOLDER | 1 | |
| | VSC5590 | POWER PCB SHIELD (L) | 1 | |
| | VSC5589 | POWER PCB SHIELD (U) | 1 | |
| | XQN16+B3FN | SCREW | 2 | |
| | VMX3424 | GYRO PCB SPACER | 1 | |
| | | | | |
| | | | | |
| | | | | |
| | | | | |
| | | | | |
| ■ E2 | VEP03G60B | VTR C.B.A. | 1 | (RTL) |
| | | | | |
| | | | | |
| C600 | ECJ1VB0J105K | C.CAPACITOR CH 35V 1M | 1 | |
| C602 | ECJ0EC1H680J | C.CAPACITOR CH 50V 68P | 1 | |
| C604 | F3G1A4760002 | T.CAPACITOR CH 10V 47U | 1 | |
| C605 | ECJ1VB0J105K | C.CAPACITOR CH 35V 1M | 1 | |
| C606,07 | ECJ0EB1A104K | C.CAPACITOR CH 10V 0.1U | 2 | |
| C610 | ECJ0WB1C103K | C.CAPACITOR CH 16V 0.01U | 1 | |
| C611 | ECJ0EB1A104K | C.CAPACITOR CH 10V 0.1U | 1 | |
| C612 | ECJ1VB0J105K | C.CAPACITOR CH 35V 1M | 1 | |
| C614 | ECJ0EB1E102K | C.CAPACITOR CH 25V 1000P | 1 | |
| C616 | ECJ1VB0J105K | C.CAPACITOR CH 35V 1M | 1 | |
| C617 | F1J1C105A091 | C.CAPACITOR CH 16V 1U | 1 | |
| C618-20 | F1H0J474A002 | C.CAPACITOR CH6.3V 0.47U | 3 | |
| C625 | F1H0J474A002 | C.CAPACITOR CH6.3V 0.47U | 1 | |
| C626 | ECJ1VB0J105K | C.CAPACITOR CH 35V 1M | 1 | |
| C627 | ECJ0EB1A104K | C.CAPACITOR CH 10V 0.1U | 1 | |
| C628 | ECJ1VB0J105K | C.CAPACITOR CH 35V 1M | 1 | |
| C629 | ECST0JY335Z | T.CAPACITOR CH6.3V 3.3U | 1 | |
| C630 | ECJ0EB1C682K | C.CAPACITOR CH 16V 6800P | 1 | |
| C631 | ECJ1VB1C104K | C.CAPACITOR CH 16V 0.1U | 1 | |
| C633 | ECJ0EB1A104K | C.CAPACITOR CH 10V 0.1U | 1 | |
| C666 | F1K1E225A047 | C.CAPACITOR CH 25V 2.2U | 1 | |
| C672 | ECJ2YB1A105K | C.CAPACITOR CH 10V 1U | 1 | |
| C2001 | ECJ0EB1A104K | C.CAPACITOR CH 10V 0.1U | 1 | |
| C2002 | ECJ0WB1C103K | C.CAPACITOR CH 16V 0.01U | 1 | |
| C2003 | ECJ0EB1A104K | C.CAPACITOR CH 10V 0.1U | 1 | |
| C2004,05 | ECJ0WB1C103K | C.CAPACITOR CH 16V 0.01U | 2 | |
| C2006 | F3F1A1060001 | T.CAPACITOR CH 10V 10U | 1 | |
| C2007,08 | ECJ0EB1A104K | C.CAPACITOR CH 10V 0.1U | 2 | |
| C2009,10 | ECJ0WB1C103K | C.CAPACITOR CH 16V 0.01U | 2 | |
| C2011 | ECJ1VB0J105K | C.CAPACITOR CH 35V 1M | 1 | |
| C2012 | ECJ0WB1C103K | C.CAPACITOR CH 16V 0.01U | 1 | |
| C2013-15 | ECJ0EB1A104K | C.CAPACITOR CH 10V 0.1U | 3 | |
| C2016 | ECJ0WB1C103K | C.CAPACITOR CH 16V 0.01U | 1 | |
| C2019 | ECJ0EB1A104K | C.CAPACITOR CH 10V 0.1U | 1 | |
| C2020,21 | ECJ0WB1C103K | C.CAPACITOR CH 16V 0.01U | 2 | |
| C2024 | ECJ0EB1A104K | C.CAPACITOR CH 10V 0.1U | 1 | |
| C2025 | ECJ0EC1H050C | C.CAPACITOR CH 50V 5P | 1 | |
| C2028 | ECJ0WB1C103K | C.CAPACITOR CH 16V 0.01U | 1 | |
| C2029 | ECJ0EB1A104K | C.CAPACITOR CH 10V 0.1U | 1 | |
| C2030 | F1G1H100A448 | C.CAPACITOR CH 50V 10P | 1 | |
| C2031 | ECJ0EB1E102K | C.CAPACITOR CH 25V 1000P | 1 | |
| C2033 | ECJ0EB1E102K | C.CAPACITOR CH 25V 1000P | 1 | |
| C2034 | F3F1A1060001 | T.CAPACITOR CH 10V 10U | 1 | |
| | | | | |
| | | | | |

| Ref.No. | Part No. | Part Name & Description | Pcs | Remarks |
|---|---|---|---|---|
| C2037 | ECJ0EB1A473K | C.CAPACITOR CH 10V 0.047U | 1 | |
| C2041 | ECJ0WB1C103K | C.CAPACITOR CH 16V 0.01U | 1 | |
| C2043 | F1G1H100A448 | C.CAPACITOR CH 50V 10P | 1 | |
| C2047 | ECJ0WB1C103K | C.CAPACITOR CH 16V 0.01U | 1 | |
| C2048 | ECJ1VB0J105K | C.CAPACITOR CH 35V 1M | 1 | |
| C2053 | ECJ0WB1C103K | C.CAPACITOR CH 16V 0.01U | 1 | |
| C2054 | F3F1A1060001 | T.CAPACITOR CH 10V 10U | 1 | |
| C2055 | ECJ0WB1C103K | C.CAPACITOR CH 16V 0.01U | 1 | |
| C2063 | ECJ0EB1A104K | C.CAPACITOR CH 10V 0.1U | 1 | |
| C2072 | ECJ1VB0J105K | C.CAPACITOR CH 35V 1M | 1 | |
| C2201,02 | ECJ1VB0J105K | C.CAPACITOR CH 35V 1M | 2 | |
| C2203 | F3F1A1060001 | T.CAPACITOR CH 10V 10U | 1 | |
| C2204 | ECJ0EC1H470J | C.CAPACITOR CH 50V 47P | 1 | |
| C2205-08 | ECJ0EB1A104K | C.CAPACITOR CH 10V 0.1U | 4 | |
| C2209 | ECJ1VB1C104K | C.CAPACITOR CH 16V 0.1U | 1 | |
| C2212 | ECJ1VB0J105K | C.CAPACITOR CH 35V 1M | 1 | |
| C2213 | ECJ0WB1C103K | C.CAPACITOR CH 16V 0.01U | 1 | |
| C2216 | ECJ1VB0J105K | C.CAPACITOR CH 35V 1M | 1 | |
| C2217-20 | ECJ0EB1A104K | C.CAPACITOR CH 10V 0.1U | 4 | |
| C2221 | ECJ1VB0J105K | C.CAPACITOR CH 35V 1M | 1 | |
| C2222,23 | ECJ0EB1E472K | C.CAPACITOR CH 25V 4700P | 2 | |
| C2225 | ECJ1VB0J105K | C.CAPACITOR CH 35V 1M | 1 | |
| C2226 | F3F1A1060001 | T.CAPACITOR CH 10V 10U | 1 | |
| C2230 | ECJ0EC1H101J | C.CAPACITOR CH 50V 100P | 1 | |
| C2231 | F1J1C105A091 | C.CAPACITOR CH 16V 1U | 1 | |
| C2232 | ECJ0WB1C103K | C.CAPACITOR CH 16V 0.01U | 1 | |
| C2243 | ECJ1VB1C104K | C.CAPACITOR CH 16V 0.1U | 1 | |
| C3001 | ECJ1VB0J105K | C.CAPACITOR CH 35V 1M | 1 | |
| C3002 | ECJ0EB1A104K | C.CAPACITOR CH 10V 0.1U | 1 | |
| C3003 | F3F1A1060001 | T.CAPACITOR CH 10V 10U | 1 | |
| C3004 | ECJ1VB0J105K | C.CAPACITOR CH 35V 1M | 1 | |
| C3005 | F3G1A4760001 | T.CAPACITOR CH 10V 47U | 1 | |
| C3006 | F3F1A1060001 | T.CAPACITOR CH 10V 10U | 1 | |
| C3007 | ECJ0EB1A104K | C.CAPACITOR CH 10V 0.1U | 1 | |
| C3008 | F3F1A1060001 | T.CAPACITOR CH 10V 10U | 1 | |
| C3009 | ECJ0EB1A104K | C.CAPACITOR CH 10V 0.1U | 1 | |
| C3010-12 | ECJ1VB0J105K | C.CAPACITOR CH 35V 1M | 3 | |
| C3013 | ECJ0WB1C103K | C.CAPACITOR CH 16V 0.01U | 1 | |
| C3014 | ECJ0EB1A104K | C.CAPACITOR CH 10V 0.1U | 1 | |
| C3015 | F3F1A1060001 | T.CAPACITOR CH 10V 10U | 1 | |
| C3016 | ECJ0EB1A104K | C.CAPACITOR CH 10V 0.1U | 1 | |
| C3017 | F3F1A1060001 | T.CAPACITOR CH 10V 10U | 1 | |
| C3018 | ECJ0EB1A104K | C.CAPACITOR CH 10V 0.1U | 1 | |
| C3019 | ECJ0WB1C103K | C.CAPACITOR CH 16V 0.01U | 1 | |
| C3020,21 | ECJ0EB1A104K | C.CAPACITOR CH 10V 0.1U | 2 | |
| C3024,25 | ECJ0EB1A104K | C.CAPACITOR CH 10V 0.1U | 2 | |
| C3027 | ECJ0EB1A104K | C.CAPACITOR CH 10V 0.1U | 1 | |
| C3029 | ECJ0EB1A104K | C.CAPACITOR CH 10V 0.1U | 1 | |
| C3030 | ECJ0WB1C103K | C.CAPACITOR CH 16V 0.01U | 1 | |
| C3031 | ECJ0EB1A104K | C.CAPACITOR CH 10V 0.1U | 1 | |
| C3033 | ECJ0WB1C103K | C.CAPACITOR CH 16V 0.01U | 1 | |
| C3034 | F3F1A1060001 | T.CAPACITOR CH 10V 10U | 1 | |
| C3035,36 | ECJ0EB1A104K | C.CAPACITOR CH 10V 0.1U | 2 | |
| C3038 | F3F1A226A001 | T.CAPACITOR CH 10V 22U | 1 | |
| C3039 | ECJ0EB1A104K | C.CAPACITOR CH 10V 0.1U | 1 | |
| C3041 | ECJ0EB1A104K | C.CAPACITOR CH 10V 0.1U | 1 | |
| C3043 | ECJ1VB0J105K | C.CAPACITOR CH 35V 1M | 1 | |
| C3045 | ECJ1VB0J225K | C.CAPACITOR CH6.3V 2.2U | 1 | |
| C3046,47 | ECJ1VB0J105K | C.CAPACITOR CH 35V 1M | 2 | |
| C3053 | ECJ1VB0J105K | C.CAPACITOR CH 35V 1M | 1 | |
| C3055 | F3G1A4760002 | T.CAPACITOR CH 10V 47U | 1 | |
| C3056 | ECJ0EB1A104K | C.CAPACITOR CH 10V 0.1U | 1 | |
| C3061 | F1J0J475A008 | C.CAPACITOR CH6.3V 4.7U | 1 | |
| C3062 | ECJ0EB1A104K | C.CAPACITOR CH 10V 0.1U | 1 | |
| C3063 | F1J0J475A008 | C.CAPACITOR CH6.3V 4.7U | 1 | |
| C3064-67 | ECJ0EB1A104K | C.CAPACITOR CH 10V 0.1U | 4 | |
| C3101 | ECJ0EB1A104K | C.CAPACITOR CH 10V 0.1U | 1 | |
| C3102,03 | ECJ0WB1C103K | C.CAPACITOR CH 16V 0.01U | 2 | |
| C3104 | F1J0J475A008 | C.CAPACITOR CH6.3V 4.7U | 1 | |
| C3105,06 | ECJ0WB1C103K | C.CAPACITOR CH 16V 0.01U | 2 | |
| C3107 | ECJ0EB1A104K | C.CAPACITOR CH 10V 0.1U | 1 | |
| C3108 | F3F1A226A001 | T.CAPACITOR CH 10V 22U | 1 | |
| C3109 | ECJ0WB1C103K | C.CAPACITOR CH 16V 0.01U | 1 | |
| C3110 | F3H1A1070006 | T.CAPACITOR CH 10V 100U | 1 | |
| C3111 | ECJ0WB1C103K | C.CAPACITOR CH 16V 0.01U | 1 | |
| | | | | |
| | | | | |

Components identified with the mark ⚠ have special characteristics for safety.
When replacing any of these component, use only the same type.

| Ref.No. | Part No. | Part Name & Description | Pcs | Remarks |
|---|---|---|---|---|
| C3112 | ECJ1VB0J225K | C.CAPACITOR CH6.3V 2.2U | 1 | |
| C3113 | F3G1C2260001 | T.CAPACITOR CH 16V 22U | 1 | |
| C3114 | F1J0J475A008 | C.CAPACITOR CH6.3V 4.7U | 1 | |
| C3115 | ECJ0EB1A104K | C.CAPACITOR CH 10V 0.1U | 1 | |
| C3116,17 | ECJ1VB0J225K | C.CAPACITOR CH6.3V 2.2U | 2 | |
| C3118 | ECJ1VB0J105K | C.CAPACITOR CH 35V 1M | 1 | |
| C3119 | F3H0J1070005 | T.CAPACITOR CH6.3V 100U | 1 | |
| C3120 | F3F0J226A007 | T.CAPACITOR CH6.3V 22U | 1 | |
| C3121 | F3E0G1060002 | T.CAPACITOR CH 4V 10U | 1 | |
| C3122 | F3F0J226A007 | T.CAPACITOR CH6.3V 22U | 1 | |
| C3123 | F3F1A1060001 | T.CAPACITOR CH 10V 10U | 1 | |
| C3124 | ECJ1VB0J105K | C.CAPACITOR CH 35V 1M | 1 | |
| C3125 | F1J0J475A008 | C.CAPACITOR CH6.3V 4.7U | 1 | |
| C3126 | ECJ1VB1C104K | C.CAPACITOR CH 16V 0.1U | 1 | |
| C3127 | ECJ0WB1C103K | C.CAPACITOR CH 16V 0.01U | 1 | |
| C3128 | ECJ1VB0J225K | C.CAPACITOR CH6.3V 2.2U | 1 | |
| C3129 | ECJ1VB0J105K | C.CAPACITOR CH 35V 1M | 1 | |
| C3130 | F3G1A4760002 | T.CAPACITOR CH 10V 47U | 1 | |
| C3131,32 | ECJ1VB0J225K | C.CAPACITOR CH6.3V 2.2U | 2 | |
| C3133 | F3G1A4760002 | T.CAPACITOR CH 10V 47U | 1 | |
| C3134 | ECJ0WB1C103K | C.CAPACITOR CH 16V 0.01U | 1 | |
| C3135 | F3G1A4760002 | T.CAPACITOR CH 10V 47U | 1 | |
| C3136,37 | ECJ1VB0J105K | C.CAPACITOR CH 35V 1M | 2 | |
| C3138 | F3F1A1060001 | T.CAPACITOR CH 10V 10U | 1 | |
| C3139 | F3E0J106A005 | T.CAPACITOR CH6.3V 10U | 1 | |
| C3140,41 | ECJ0EB1A104K | C.CAPACITOR CH 10V 0.1U | 2 | |
| C3142 | F3G1A4760002 | T.CAPACITOR CH 10V 47U | 1 | |
| C3201 | ECJ1VB0J105K | C.CAPACITOR CH 35V 1M | 1 | |
| C3202 | F1J0J475A008 | C.CAPACITOR CH6.3V 4.7U | 1 | |
| C3203 | F3E0J106A005 | T.CAPACITOR CH6.3V 10U | 1 | |
| C3204-08 | ECJ0EB1A104K | C.CAPACITOR CH 10V 0.1U | 5 | |
| C3210 | F3E0J106A005 | T.CAPACITOR CH6.3V 10U | 1 | |
| C3212,13 | ECJ0EB1A104K | C.CAPACITOR CH 10V 0.1U | 2 | |
| C3215 | ECJ0EB1A104K | C.CAPACITOR CH 10V 0.1U | 1 | |
| C3218-20 | ECJ0EB1A104K | C.CAPACITOR CH 10V 0.1U | 3 | |
| C3221 | F1J0J475A008 | C.CAPACITOR CH6.3V 4.7U | 1 | |
| C3229 | ECJ0EB1A104K | C.CAPACITOR CH 10V 0.1U | 1 | |
| C3252 | ECJ1VB0J105K | C.CAPACITOR CH 35V 1M | 1 | |
| C3253 | ECJ0EC1H221J | C.CAPACITOR CH 50V 220P | 1 | |
| C3254 | ECJ1VB0J105K | C.CAPACITOR CH 35V 1M | 1 | |
| C3255 | ECJ0EB1A104K | C.CAPACITOR CH 10V 0.1U | 1 | |
| C3257 | F3G1A4760002 | T.CAPACITOR CH 10V 47U | 1 | |
| C3259 | ECJ0EB1A104K | C.CAPACITOR CH 10V 0.1U | 1 | |
| C3260 | ECJ0EC1H220J | C.CAPACITOR CH 50V 22P | 1 | |
| C3501-03 | ECJ1VB0J105K | C.CAPACITOR CH 35V 1M | 3 | |
| C3504,05 | ECJ0WB1C103K | C.CAPACITOR CH 16V 0.01U | 2 | |
| C3506 | ECJ0EB1A104K | C.CAPACITOR CH 10V 0.1U | 1 | |
| C3507,08 | ECJ0WB1C103K | C.CAPACITOR CH 16V 0.01U | 2 | |
| C3509,10 | ECJ0EB1A104K | C.CAPACITOR CH 10V 0.1U | 2 | |
| C3511 | F3F1A1060001 | T.CAPACITOR CH 10V 10U | 1 | |
| C3512,13 | ECJ0EB1A104K | C.CAPACITOR CH 10V 0.1U | 2 | |
| C3514,15 | ECJ0EB1E102K | C.CAPACITOR CH 25V 1000P | 2 | |
| C3516 | ECJ0EB1A104K | C.CAPACITOR CH 10V 0.1U | 1 | |
| C3517,18 | ECJ0WB1C103K | C.CAPACITOR CH 16V 0.01U | 2 | |
| C3519 | ECJ0EB1A104K | C.CAPACITOR CH 10V 0.1U | 1 | |
| C3520 | ECJ0WB1C103K | C.CAPACITOR CH 16V 0.01U | 1 | |
| C3521-23 | ECJ0EB1A104K | C.CAPACITOR CH 10V 0.1U | 3 | |
| C3551 | ECJ0EC1H220J | C.CAPACITOR CH 50V 22P | 1 | |
| C3552,53 | ECJ0EC1H560J | C.CAPACITOR CH 50V 56P | 2 | |
| C3554 | ECJ0EC1H220J | C.CAPACITOR CH 50V 22P | 1 | |
| C3555 | ECJ0EB1E102K | C.CAPACITOR CH 25V 1000P | 1 | |
| C3556 | F3F1C1060002 | T.CAPACITOR CH 16V 10U | 1 | |
| C3557 | ECJ0EB1A104K | C.CAPACITOR CH 10V 0.1U | 1 | |
| C3558-60 | ECJ0WB1C103K | C.CAPACITOR CH 16V 0.01U | 3 | |
| C3561 | ECJ0EC1H220J | C.CAPACITOR CH 50V 22P | 1 | |
| C3562 | ECJ0EC1H560J | C.CAPACITOR CH 50V 56P | 1 | |
| C3563 | ECJ0EC1H390J | C.CAPACITOR CH 50V 39P | 1 | |
| C3564 | ECJ0EB1E102K | C.CAPACITOR CH 25V 1000P | 1 | |
| C3566 | F3E0J106A005 | T.CAPACITOR CH6.3V 10U | 1 | |
| C3569 | ECJ0WB1C103K | C.CAPACITOR CH 16V 0.01U | 1 | |
| C3570 | ECJ0EB1A104K | C.CAPACITOR CH 10V 0.1U | 1 | |
| C4000,01 | ECJ1VC1H330J | C.CAPACITOR CH 50V 33P | 2 | |
| C4002 | ECJ1VB1C104K | C.CAPACITOR CH 16V 0.1U | 1 | |
| C4003,04 | ECUM1E823KBN | C.CAPACITOR CH 25V 0.082U | 2 | |
| C4005,06 | ECJ1VB1E223K | C.CAPACITOR CH 25V 0.022U | 2 | |

| Ref.No. | Part No. | Part Name & Description | Pcs | Remarks |
|---|---|---|---|---|
| C4007,08 | ECUX1A105KBV | C.CAPACITOR CH 10V 1U | 2 | |
| C4009 | ECJ1VB1C104K | C.CAPACITOR CH 16V 0.1U | 1 | |
| C4010 | F1J0J475A008 | C.CAPACITOR CH6.3V 4.7U | 1 | |
| C4011,12 | F1J1A335A003 | C.CAPACITOR CH 10V 3.3U | 2 | |
| C4013 | F3F1A226A008 | T.CAPACITOR CH 10V 22U | 1 | |
| C4014 | F3G1C2260001 | T.CAPACITOR CH 16V 22U | 1 | |
| C4015 | ECJ1VB1C104K | C.CAPACITOR CH 16V 0.1U | 1 | |
| C4017-20 | ECUX1C273KBV | C.CAPACITOR CH 16V 0.027U | 4 | |
| C4021,22 | ECJ1VB1C104K | C.CAPACITOR CH 16V 0.1U | 2 | |
| C4025,26 | ECJ1VB1C104K | C.CAPACITOR CH 16V 0.1U | 2 | |
| C4029,30 | F3F1A226A008 | T.CAPACITOR CH 10V 22U | 2 | |
| C5001 | F3H1C4760008 | T.CAPACITOR CH 16V 47U | 1 | |
| C5002,03 | F1J0J475A008 | C.CAPACITOR CH6.3V 4.7U | 2 | |
| C5005 | ECJ0EB1E681K | C.CAPACITOR CH 25V 680P | 1 | |
| C5008 | ECJ0WB1C103K | C.CAPACITOR CH 16V 0.01U | 1 | |
| C5012 | ECJ0EB1A104K | C.CAPACITOR CH 10V 0.1U | 1 | |
| C5013 | ECJ0WB1C103K | C.CAPACITOR CH 16V 0.01U | 1 | |
| C5014 | ECJ1VC1H470J | C.CAPACITOR CH 50V 47P | 1 | |
| C5021-24 | ECJ0EC1H080C | C.CAPACITOR CH 50V 8P | 4 | |
| | | | | |
| D1 | B0JDAD000001 | DIODE | 1 | |
| D601 | MA338 | DIODE | 1 | MA2X338 |
| D602 | MA111 | DIODE | 1 | |
| D2001 | MA133 | DIODE | 1 | |
| D2006 | MA2SD2400L | DIODE | 1 | |
| D2009 | MA2SD2400L | DIODE | 1 | |
| D2012 | MA111 | DIODE | 1 | |
| D2013 | MA2SD2400L | DIODE | 1 | |
| D2014 | MA2S11100L | DIODE | 1 | |
| D2201 | MA133 | DIODE | 1 | |
| D3102,03 | D4ED1220A006 | VARISTOR | 2 | |
| | | | | |
| IC601 | C0HBA0000094 | IC | 1 | |
| IC602 | C0JBAA000115 | IC | 1 | |
| IC2001 | C2DBLK000004 | IC | 1 | |
| IC2005 | C0ABAA000046 | IC | 1 | |
| IC2007 | C1ZBZ0002226 | IC | 1 | |
| IC2008 | C3EBGG000015 | IC | 1 | |
| IC2011 | C0CBAAA00016 | IC | 1 | |
| IC2012 | C0EBD0000171 | IC | 1 | |
| IC2013 | C0CBCAC00082 | IC | 1 | |
| IC2014 | C0CBABC00137 | IC | 1 | |
| IC2201 | C1AB00001752 | IC | 1 | |
| IC3001 | C1AB00001797 | IC | 1 | |
| IC3002 | AN2903FJQ-V | IC | 1 | |
| IC3004 | C0FBZJ000005 | IC | 1 | |
| IC3005 | C1BB00000820 | IC | 1 | |
| IC3006 | C0JBAA000246 | IC | 1 | |
| IC3007 | C0JBAC000265 | IC | 1 | |
| IC3008 | C0ZBZ0000830 | IC | 1 | |
| IC3009 | C0CBAAE00016 | IC | 1 | |
| IC3201 | C1AB00001695 | IC | 1 | |
| IC3202 | C1AB00001612 | IC | 1 | |
| IC3501 | C1AB00001280 | IC | 1 | |
| IC3502 | C0ABAA000046 | IC | 1 | |
| IC3503 | C1AB00000647 | IC | 1 | |
| IC4000,01 | TA75W01FU | IC | 2 | |
| IC4002 | C0ZBZ0000043 | IC | 1 | |
| IC4003,04 | TA75S01F | IC | 2 | |
| IC4005 | TC4W53FU | IC | 1 | |
| IC4008 | TC4W53FU | IC | 1 | |
| IC5001 | AN3732FJMEFV | IC | 1 | |
| | | | | |
| L601 | VLQ0426J3R3 | COIL 3.3UH | 1 | G1C3R3J00009 |
| L605,06 | VLQ0807K220 | COIL 22UH | 2 | G1C220K00016 |
| L2002 | VLQ0807K220 | COIL 22UH | 1 | G1C220K00016 |
| L3006 | G1C100MA0060 | COIL 10UH | 1 | |
| L3009 | G1C100KA0055 | COIL 10UH | 1 | |
| L3011-14 | G1C100KA0055 | COIL 10UH | 4 | |
| L3015 | G1C101KA0055 | COIL 100UH | 1 | |
| L3017 | G1C470MA0072 | COIL 47UH | 1 | |
| L3018 | G1C100K00019 | COIL 10UH | 1 | |
| L3021-23 | G1C100KA0055 | COIL 10UH | 3 | |
| L3204 | G1C101KA0055 | COIL 100UH | 1 | |
| L3206 | G1C100KA0055 | COIL 10UH | 1 | |

Components identified with the mark ⚠ have special characteristics for safety.
When replacing any of these component, use only the same type.

| Ref.No. | Part No. | Part Name & Description | Pcs | Remarks |
|---|---|---|---|---|
| L3501 | G1C100KA0055 | COIL 10UH | 1 | |
| L3505-09 | G1C330K00017 | COIL 33UH | 5 | |
| L4000 | G1C100MA0060 | COIL 10UH | 1 | |
| L5001 | G1C101KA0055 | COIL 100UH | 1 | |
| L5002,03 | G1C100MA0060 | COIL 10UH | 2 | |
| | | | | |
| LB3001 | J0JAC0000014 | FILTER | 1 | |
| LB3003,04 | J0JAC0000014 | FILTER | 2 | |
| LB3006 | J0JAC0000014 | FILTER | 1 | |
| LB3201 | J0JAC0000014 | FILTER | 1 | |
| LB3203 | J0JAC0000014 | FILTER | 1 | |
| LB3205 | J0JAC0000014 | FILTER | 1 | |
| LB3502,03 | J0JBC0000012 | FILTER | 2 | |
| | | | | |
| P2200 | K1KBC0A00028 | CONNECTOR (FEMALE) | 1 | |
| P2201 | K1KB40A00131 | CONNECTOR (FEMALE) | 1 | |
| P2210 | K1MN08A00032 | CONNECTOR | 1 | |
| P2211 | K1MN08B00040 | CONNECTOR | 1 | |
| P2212,13 | K1MN18B00049 | CONNECTOR | 2 | |
| P2214 | K1MN10B00062 | CONNECTOR | 1 | |
| P2215 | VJS3826C030 | CONNECTOR (FEMALE) | 1 | |
| P2216 | VJS3791D024 | CONNECTOR (FEMALE) | 1 | K1MN24B00012 |
| P2217 | K1MN33B00023 | CONNECTOR | 1 | |
| P2219 | K1KB60A00122 | CONNECTOR (FEMALE) | 1 | |
| P2220 | VJP3172D002 | CONNECTOR (MALE) | 1 | K1KA02B00051 |
| P2221 | K1KA02B00053 | CONNECTOR (MALE) | 1 | |
| P2222 | K1KA08A00267 | CONNECTOR (MALE) | 1 | |
| P2224 | K1KB30B00014 | CONNECTOR (FEMALE) | 1 | |
| | | | | |
| Q601 | B1ADGD000005 | TRANSISTOR | 1 | |
| Q602 | B1ADBE000001 | TRANSISTOR | 1 | |
| Q603 | XP1501 | TRANSISTOR-RESISTOR | 1 | |
| Q605 | B1ADGD000005 | TRANSISTOR | 1 | |
| Q608 | B1ADGD000005 | TRANSISTOR | 1 | |
| Q611 | 2SD2216J0L | TRANSISTOR | 1 | |
| Q2001 | 2SB0970X0L | TRANSISTOR | 1 | |
| Q2002 | 2SA202100L | TRANSISTOR | 1 | |
| Q2003 | 2SD182000L | TRANSISTOR | 1 | |
| Q2004 | B1CHHD000003 | TRANSISTOR | 1 | |
| Q2007 | B1ACGD000006 | TRANSISTOR | 1 | |
| Q3101-03 | B1ABBE000002 | TRANSISTOR | 3 | |
| Q3501 | B1ACGD000006 | TRANSISTOR | 1 | |
| Q3503 | XP0460100L | TRANSISTOR | 1 | |
| Q3504 | 2SB1218AHL | TRANSISTOR | 1 | |
| Q3505 | B1ABBE000002 | TRANSISTOR | 1 | |
| Q3506 | XP0460100L | TRANSISTOR | 1 | |
| Q4000,01 | 2SD1819A-R | TRANSISTOR | 2 | |
| Q4002 | 2SD1824 | TRANSISTOR | 1 | |
| Q4003,04 | XP0121300L | TRANSISTOR | 2 | |
| | | | | |
| QR604 | B1GBCFLL0022 | TRANSISTOR | 1 | |
| QR2001 | UNR321F00L | TRANSISTOR | 1 | |
| QR2003 | UNR321F00L | TRANSISTOR | 1 | |
| QR2006,07 | XP0411500L | TRANSISTOR | 2 | |
| QR2012 | XP0431N00L | TRANSISTOR | 1 | |
| QR3104 | UNR221300L | TRANSISTOR | 1 | |
| QR3502 | B1GBBEKK0001 | TRANSISTOR | 1 | |
| | | | | |
| R601 | ERJ6GEYJ4R7 | M.RESISTOR CH 1/10W 4.7K | 1 | |
| R602 | ERJ2GEJ223 | M.RESISTOR CH 1/16W 22K | 1 | |
| R604 | ERJ6GEY0R00 | M.RESISTOR CH 1/10W 0 | 1 | D0YDR0000005 |
| R606 | ERJ2GEJ102 | M.RESISTOR CH 1/16W 1K | 1 | |
| R609 | ERJ2GEJ102 | M.RESISTOR CH 1/16W 1K | 1 | |
| R610,11 | ERJ2GEJ101 | M.RESISTOR CH 1/16W 100 | 2 | |
| R614 | ERJ2GEJ102 | M.RESISTOR CH 1/16W 1K | 1 | |
| R615 | ERJ2GEJ333 | M.RESISTOR CH 1/16W 33K | 1 | |
| R616 | ERJ2GEJ101 | M.RESISTOR CH 1/16W 100 | 1 | |
| R617 | ERJ2GEJ102 | M.RESISTOR CH 1/16W 1K | 1 | |
| R618,19 | ERJ2GEJ103 | M.RESISTOR CH 1/16W 10K | 2 | |
| R622 | ERJ2GEJ223 | M.RESISTOR CH 1/16W 22K | 1 | |
| R623 | ERJ2GEJ273 | M.RESISTOR CH 1/16W 27K | 1 | |
| R624,25 | ERJ2GEJ104 | M.RESISTOR CH 1/16W 100K | 2 | |
| R626 | ERJ2GEJ102 | M.RESISTOR CH 1/16W 1K | 1 | |
| R627 | ERJ2GEJ473 | M.RESISTOR CH 1/16W 47K | 1 | |
| R628 | ERJ2RHD473 | M.RESISTOR CH 1/16W 47K | 1 | |
| | | | | |
| | | | | |

| Ref.No. | Part No. | Part Name & Description | Pcs | Remarks |
|---|---|---|---|---|
| R629 | ERJ2GEJ153 | M.RESISTOR CH 1/16W 15K | 1 | |
| R630 | ERJ2GEJ222 | M.RESISTOR CH 1/16W 2.2K | 1 | |
| R631 | ERJ2RHD113 | M.RESISTOR CH 1/16W 11K | 1 | |
| R632 | ERJ2RHD183 | M.RESISTOR CH 1/16W 18K | 1 | |
| R633 | ERJ2GEJ223 | M.RESISTOR CH 1/16W 22K | 1 | |
| R636 | ERJ6GEY0R00 | M.RESISTOR CH 1/10W 0 | 1 | D0YDR0000005 |
| R638-40 | ERJ2GEJ101 | M.RESISTOR CH 1/16W 100 | 3 | |
| R642 | ERJ2GEJ153 | M.RESISTOR CH 1/16W 15K | 1 | |
| R644 | ERJ2GEJ332 | M.RESISTOR CH 1/16W 3.3K | 1 | |
| R647 | ERJ2GEJ102 | M.RESISTOR CH 1/16W 1K | 1 | |
| R648-50 | ERJ2GEJ101 | M.RESISTOR CH 1/16W 100 | 3 | |
| R651 | ERJ2GEJ104 | M.RESISTOR CH 1/16W 100K | 1 | |
| R657 | ERJ2GEJ394 | M.RESISTOR CH 1/16W 390K | 1 | |
| R658 | ERJ2RMJ331 | M.RESISTOR CH 1/16W 330 | 1 | |
| R2001,02 | ERJ2GEJ103 | M.RESISTOR CH 1/16W 10K | 2 | |
| R2003 | ERJ2GE0R00 | M.RESISTOR CH 1/16W 0 | 1 | |
| R2004,05 | ERJ2GEJ103 | M.RESISTOR CH 1/16W 10K | 2 | |
| R2006 | ERJ2GEJ472 | M.RESISTOR CH 1/16W 4.7K | 1 | |
| R2008 | ERJ2GEJ473 | M.RESISTOR CH 1/16W 47K | 1 | |
| R2009 | ERJ2GE0R00 | M.RESISTOR CH 1/16W 0 | 1 | |
| R2010 | ERJ2GEJ104 | M.RESISTOR CH 1/16W 100K | 1 | |
| R2011 | ERJ2GEJ473 | M.RESISTOR CH 1/16W 47K | 1 | |
| R2012 | ERJ2GEJ152 | M.RESISTOR CH 1/16W 1.5K | 1 | |
| R2013 | ERJ2GEJ223 | M.RESISTOR CH 1/16W 22K | 1 | |
| R2014 | ERJ2GEJ273 | M.RESISTOR CH 1/16W 27K | 1 | |
| R2016,17 | ERJ2GEJ473 | M.RESISTOR CH 1/16W 47K | 2 | |
| R2019 | ERJ2RHD223 | M.RESISTOR CH 1/16W 22K | 1 | |
| R2021 | ERJ3GEY0R00 | M.RESISTOR CH 1/16W 0 | 1 | |
| R2022-24 | ERJ2GEJ101 | M.RESISTOR CH 1/16W 100 | 3 | |
| R2025 | ERJ2GEJ102 | M.RESISTOR CH 1/16W 1K | 1 | |
| R2026 | ERJ3GEY0R00 | M.RESISTOR CH 1/16W 0 | 1 | |
| R2027 | ERJ2GEJ473 | M.RESISTOR CH 1/16W 47K | 1 | |
| R2029 | ERJ2GEJ473 | M.RESISTOR CH 1/16W 47K | 1 | |
| R2030 | ERJ2GEJ273 | M.RESISTOR CH 1/16W 27K | 1 | |
| R2031 | ERJ2GEJ152 | M.RESISTOR CH 1/16W 1.5K | 1 | |
| R2032 | ERJ2GEJ331 | M.RESISTOR CH 1/16W 330 | 1 | |
| R2033 | ERJ2GEJ102 | M.RESISTOR CH 1/16W 1K | 1 | |
| R2034 | ERJ2GEJ473 | M.RESISTOR CH 1/16W 47K | 1 | |
| R2036 | ERJ3GEY0R00 | M.RESISTOR CH 1/16W 0 | 1 | |
| R2037 | ERJ2GEJ103 | M.RESISTOR CH 1/16W 10K | 1 | |
| R2039 | ERJ2GEJ471 | M.RESISTOR CH 1/16W 470 | 1 | |
| R2040 | ERJ8GEYG680 | M.RESISTOR CH 1/8W 68 | 1 | |
| R2041 | ERJ2GEJ102 | M.RESISTOR CH 1/16W 1K | 1 | |
| R2042 | ERJ3GEY0R00 | M.RESISTOR CH 1/16W 0 | 1 | |
| R2045 | ERJ2GE0R00 | M.RESISTOR CH 1/16W 0 | 1 | |
| R2047,48 | ERJ2GEJ473 | M.RESISTOR CH 1/16W 47K | 2 | |
| R2050 | ERJ2GEJ105 | M.RESISTOR CH 1/16W 1M | 1 | |
| R2051 | ERJ2GEJ102 | M.RESISTOR CH 1/16W 1K | 1 | |
| R2052 | ERJ2GEJ473 | M.RESISTOR CH 1/16W 47K | 1 | |
| R2054 | ERJ2GEJ103 | M.RESISTOR CH 1/16W 10K | 1 | |
| R2055 | ERJ2GEJ223 | M.RESISTOR CH 1/16W 22K | 1 | |
| R2057 | ERJ2GEJ102 | M.RESISTOR CH 1/16W 1K | 1 | |
| R2060 | ERJ2GEJ103 | M.RESISTOR CH 1/16W 10K | 1 | |
| R2061 | ERJ2GEJ473 | M.RESISTOR CH 1/16W 47K | 1 | |
| R2065 | ERJ2GEJ821 | M.RESISTOR CH 1/16W 820 | 1 | |
| R2066 | ERJ2GEJ103 | M.RESISTOR CH 1/16W 10K | 1 | |
| R2067 | ERJ2GEJ394 | M.RESISTOR CH 1/16W 390K | 1 | |
| R2068 | ERJ2GEJ271 | M.RESISTOR CH 1/16W 270 | 1 | |
| R2069 | ERJ2GEJ102 | M.RESISTOR CH 1/16W 1K | 1 | |
| R2074 | ERJ2GEJ102 | M.RESISTOR CH 1/16W 1K | 1 | |
| R2075 | ERJ2GEJ473 | M.RESISTOR CH 1/16W 47K | 1 | |
| R2078 | ERJ2GEJ473 | M.RESISTOR CH 1/16W 47K | 1 | |
| R2080 | ERJ2GEJ223 | M.RESISTOR CH 1/16W 22K | 1 | |
| R2082 | ERJ2GEJ563 | M.RESISTOR CH 1/16W 56K | 1 | |
| R2083 | ERJ2GEJ393 | M.RESISTOR CH 1/16W 39K | 1 | |
| R2089 | ERJ2GEJ473 | M.RESISTOR CH 1/16W 47K | 1 | |
| R2091 | ERJ2GEJ103 | M.RESISTOR CH 1/16W 10K | 1 | |
| R2092 | ERJ2GEJ332 | M.RESISTOR CH 1/16W 3.3K | 1 | |
| R2093 | ERJ2GEJ102 | M.RESISTOR CH 1/16W 1K | 1 | |
| R2094 | ERJ2GEJ472 | M.RESISTOR CH 1/16W 4.7K | 1 | |
| R2095 | ERJ2GE0R00 | M.RESISTOR CH 1/16W 0 | 1 | |
| R2096 | ERJ2RHD223 | M.RESISTOR CH 1/16W 22K | 1 | |
| R2097 | ERJ2GEJ392 | M.RESISTOR CH 1/16W 3.9K | 1 | |
| R2099,00 | ERJ2GE0R00 | M.RESISTOR CH 1/16W 0 | 2 | |
| R2101 | ERJ2GEJ102 | M.RESISTOR CH 1/16W 1K | 1 | |
| | | | | |
| | | | | |

Components identified with the mark ⚠ have special characteristics for safety.
When replacing any of these component, use only the same type.

| Ref.No. | Part No. | Part Name & Description | Pcs | Remarks |
|---|---|---|---|---|
| R2104 | ERJ2GEJ103 | M.RESISTOR CH 1/16W 10K | 1 | |
| R2105 | ERJ2GEJ473 | M.RESISTOR CH 1/16W 47K | 1 | |
| R2111 | ERJ2GE0R00 | M.RESISTOR CH 1/16W 0 | 1 | |
| R2114,15 | ERJ2GEJ103 | M.RESISTOR CH 1/16W 10K | 2 | |
| R2116 | ERJ2GEJ105 | M.RESISTOR CH 1/16W 1M | 1 | |
| R2117 | ERJ2GEJ222 | M.RESISTOR CH 1/16W 2.2K | 1 | |
| R2118,19 | ERJ2GEJ103 | M.RESISTOR CH 1/16W 10K | 2 | |
| R2120 | ERJ2GE0R00 | M.RESISTOR CH 1/16W 0 | 1 | |
| R2122 | ERJ2GEJ102 | M.RESISTOR CH 1/16W 1K | 1 | |
| R2126,27 | ERJ2GEJ331 | M.RESISTOR CH 1/16W 330 | 2 | |
| R2128 | ERJ2GEJ104 | M.RESISTOR CH 1/16W 100K | 1 | |
| R2129 | ERJ2RHD273 | M.RESISTOR CH 1/16W 27K | 1 | |
| R2130 | ERJ2GEJ104 | M.RESISTOR CH 1/16W 100K | 1 | |
| R2131 | ERJ2GEJ473 | M.RESISTOR CH 1/16W 47K | 1 | |
| R2132 | ERJ2RHD103 | M.RESISTOR CH 1/16W 10K | 1 | |
| R2133 | ERJ2RHD273 | M.RESISTOR CH 1/16W 27K | 1 | |
| R2136,37 | ERJ2RHD273 | M.RESISTOR CH 1/16W 27K | 2 | |
| R2138 | ERJ2RHD103 | M.RESISTOR CH 1/16W 10K | 1 | |
| R2139 | ERJ2GEJ332 | M.RESISTOR CH 1/16W 3.3K | 1 | |
| R2140 | ERJ2GEJ102 | M.RESISTOR CH 1/16W 1K | 1 | |
| R2141 | ERJ2GEJ473 | M.RESISTOR CH 1/16W 47K | 1 | |
| R2142 | ERJ2GEJ472 | M.RESISTOR CH 1/16W 4.7K | 1 | |
| R2143 | ERJ2GEJ104 | M.RESISTOR CH 1/16W 100K | 1 | |
| R2144 | ERJ2GEJ183 | M.RESISTOR CH 1/16W 18K | 1 | |
| R2146 | ERJ2GEJ152 | M.RESISTOR CH 1/16W 1.5K | 1 | |
| R2151 | ERJ2GEJ222 | M.RESISTOR CH 1/16W 2.2K | 1 | |
| R2153 | ERJ2GEJ152 | M.RESISTOR CH 1/16W 1.5K | 1 | |
| R2155 | ERJ2GEJ102 | M.RESISTOR CH 1/16W 1K | 1 | |
| R2161 | ERJ2GEJ223 | M.RESISTOR CH 1/16W 22K | 1 | |
| R2163 | ERJ2GEJ682 | M.RESISTOR CH 1/16W 6.8K | 1 | |
| R2170 | ERJ2GEJ822 | M.RESISTOR CH 1/16W 8.2K | 1 | |
| R2177 | ERJ2GEJ104 | M.RESISTOR CH 1/16W 100K | 1 | |
| R2189 | ERJ2GE0R00 | M.RESISTOR CH 1/16W 0 | 1 | |
| R2195 | ERJ2GEJ332 | M.RESISTOR CH 1/16W 3.3K | 1 | |
| R2199 | ERJ2GEJ101 | M.RESISTOR CH 1/16W 100 | 1 | |
| R2201 | ERJ2GEJ101 | M.RESISTOR CH 1/16W 100 | 1 | |
| R2202 | ERJ2GEJ473 | M.RESISTOR CH 1/16W 47K | 1 | |
| R2203 | ERJ2GEJ823 | M.RESISTOR CH 1/16W 82K | 1 | |
| R2204 | ERJ2GEJ104 | M.RESISTOR CH 1/16W 100K | 1 | |
| R2205,06 | ERJ2GEJ102 | M.RESISTOR CH 1/16W 1K | 2 | |
| R2207 | ERJ2GEJ103 | M.RESISTOR CH 1/16W 10K | 1 | |
| R2210 | ERJ2GEJ222 | M.RESISTOR CH 1/16W 2.2K | 1 | |
| R2211 | ERJ8RQJR27 | M.RESISTOR CH 1/8W 0.27 | 1 | |
| R2212 | ERJ2GEJ122 | M.RESISTOR CH 1/16W 1.2K | 1 | |
| R2213 | ERJ8RQJR27 | M.RESISTOR CH 1/8W 0.27 | 1 | |
| R2214 | ERJ2GEJ273 | M.RESISTOR CH 1/16W 27K | 1 | |
| R2217 | ERJ2GEJ223 | M.RESISTOR CH 1/16W 22K | 1 | |
| R2218 | ERJ2GEJ103 | M.RESISTOR CH 1/16W 10K | 1 | |
| R2219 | ERJ2RHD273 | M.RESISTOR CH 1/16W 27K | 1 | |
| R2220 | ERJ2GEJ102 | M.RESISTOR CH 1/16W 1K | 1 | |
| R2222 | ERJ2GEJ102 | M.RESISTOR CH 1/16W 1K | 1 | |
| R2226 | ERJ8GEYJR68 | M.RESISTOR CH 1/8W 0.68 | 1 | |
| R2227 | EXB24V102J | COMBI.R-R 1K | 1 | |
| R2647 | ERJ2GEJ102 | M.RESISTOR CH 1/16W 1K | 1 | |
| R2649-51 | EXB24V473J | COMBI.R-R 47K | 3 | |
| R2653,54 | EXB24V473J | COMBI.R-R 47K | 2 | |
| R2655-61 | EXB24V102J | COMBI.R-R 1K | 7 | |
| R2662 | EXB24V473J | COMBI.R-R 47K | 1 | |
| R2663-66 | EXB24V102J | COMBI.R-R 1K | 4 | |
| R2667 | ERJ2GEJ473 | M.RESISTOR CH 1/16W 47K | 1 | |
| R2668 | ERJ2GEJ102 | M.RESISTOR CH 1/16W 1K | 1 | |
| R2669 | EXB24V473J | COMBI.R-R 47K | 1 | |
| R2671,72 | ERJ2GEJ103 | M.RESISTOR CH 1/16W 10K | 2 | |
| R3001 | ERJ2GEJ100 | M.RESISTOR CH 1/16W 10 | 1 | |
| R3002 | ERJ2GEJ104 | M.RESISTOR CH 1/16W 100K | 1 | |
| R3003,04 | ERJ2GE0R00 | M.RESISTOR CH 1/16W 0 | 2 | |
| R3005 | ERJ2GEJ223 | M.RESISTOR CH 1/16W 22K | 1 | |
| R3006 | ERJ2GEJ153 | M.RESISTOR CH 1/16W 15K | 1 | |
| R3007 | ERJ2GEJ103 | M.RESISTOR CH 1/16W 10K | 1 | |
| R3008 | ERJ2GE0R00 | M.RESISTOR CH 1/16W 0 | 1 | |
| R3010,11 | ERJ2GEJ473 | M.RESISTOR CH 1/16W 47K | 2 | |
| R3015 | ERJ2GEJ273 | M.RESISTOR CH 1/16W 27K | 1 | |
| R3021 | ERJ2GEJ183 | M.RESISTOR CH 1/16W 18K | 1 | |
| R3022-25 | ERJ2GEJ103 | M.RESISTOR CH 1/16W 10K | 4 | |
| R3026 | ERJ2GEJ153 | M.RESISTOR CH 1/16W 15K | 1 | |

| Ref.No. | Part No. | Part Name & Description | Pcs | Remarks |
|---|---|---|---|---|
| R3030,31 | ERJ2GE0R00 | M.RESISTOR CH 1/16W 0 | 2 | |
| R3035 | ERJ2GEJ223 | M.RESISTOR CH 1/16W 22K | 1 | |
| R3037 | ERJ2GEJ273 | M.RESISTOR CH 1/16W 27K | 1 | |
| R3041 | ERJ2GEJ103 | M.RESISTOR CH 1/16W 10K | 1 | |
| R3101 | ERJ2GEJ221 | M.RESISTOR CH 1/16W 220 | 1 | |
| R3103 | ERJ2GEJ391 | M.RESISTOR CH 1/16W 390 | 1 | |
| R3105 | ERJ2GEJ102 | M.RESISTOR CH 1/16W 1K | 1 | |
| R3107 | ERJ2GEJ100 | M.RESISTOR CH 1/16W 10 | 1 | |
| R3108 | ERJ2GEJ472 | M.RESISTOR CH 1/16W 4.7K | 1 | |
| R3109 | ERJ2GEJ100 | M.RESISTOR CH 1/16W 10 | 1 | |
| R3110 | ERJ2GEJ182 | M.RESISTOR CH 1/16W 1.8K | 1 | |
| R3111 | ERJ2GEJ391 | M.RESISTOR CH 1/16W 390 | 1 | |
| R3112 | ERJ2GEJ103 | M.RESISTOR CH 1/16W 10K | 1 | |
| R3113 | ERJ2GEJ394 | M.RESISTOR CH 1/16W 390K | 1 | |
| R3115 | ERJ2GEJ102 | M.RESISTOR CH 1/16W 1K | 1 | |
| R3116 | ERJ2GEJ182 | M.RESISTOR CH 1/16W 1.8K | 1 | |
| R3118,19 | ERJ2GEJ101 | M.RESISTOR CH 1/16W 100 | 2 | |
| R3120 | ERJ2GEJ102 | M.RESISTOR CH 1/16W 1K | 1 | |
| R3122 | ERJ2GEJ102 | M.RESISTOR CH 1/16W 1K | 1 | |
| R3124 | ERJ2GEJ472 | M.RESISTOR CH 1/16W 4.7K | 1 | |
| R3125 | ERJ2GEJ102 | M.RESISTOR CH 1/16W 1K | 1 | |
| R3126,27 | ERJ2GEJ103 | M.RESISTOR CH 1/16W 10K | 2 | |
| R3128 | ERJ2RMJ473 | M.RESISTOR CH 1/16W 47K | 1 | |
| R3129 | ERJ2GEJ680 | M.RESISTOR CH 1/16W 68 | 1 | |
| R3131 | ERJ2GEJ750 | M.RESISTOR CH 1/16W 75 | 1 | |
| R3132 | ERJ2GEJ680 | M.RESISTOR CH 1/16W 68 | 1 | |
| R3135 | ERJ2GEJ473 | M.RESISTOR CH 1/16W 47K | 1 | |
| R3138 | ERJ2GEJ392 | M.RESISTOR CH 1/16W 3.9K | 1 | |
| R3139 | ERJ2GEJ473 | M.RESISTOR CH 1/16W 47K | 1 | |
| R3140,41 | ERJ2GEJ224 | M.RESISTOR CH 1/16W 220K | 2 | |
| R3156,57 | ERJ6GEY0R00 | M.RESISTOR CH 1/10W 0 | 2 | D0YDR0000005 |
| R3158,59 | EXB24V473J | COMBI.R-R 47K | 2 | |
| R3170 | EXB24V102J | COMBI.R-R 1K | 1 | |
| R3171 | ERJ2GE0R00 | M.RESISTOR CH 1/16W 0 | 1 | |
| R3176 | ERJ2GEJ473 | M.RESISTOR CH 1/16W 47K | 1 | |
| R3177 | ERJ2GEJ104 | M.RESISTOR CH 1/16W 100K | 1 | |
| R3178 | ERJ2GEJ473 | M.RESISTOR CH 1/16W 47K | 1 | |
| R3179,80 | ERJ2GEJ102 | M.RESISTOR CH 1/16W 1K | 2 | |
| R3181,82 | ERJ2GE0R00 | M.RESISTOR CH 1/16W 0 | 2 | |
| R3201 | ERJ2RHD182 | M.RESISTOR CH 1/16W 1.8K | 1 | |
| R3202 | ERJ2GEJ271 | M.RESISTOR CH 1/16W 270 | 1 | |
| R3203 | ERJ2GEJ221 | M.RESISTOR CH 1/16W 220 | 1 | |
| R3204 | ERJ2GEJ272 | M.RESISTOR CH 1/16W 2.7K | 1 | |
| R3205 | ERJ2GEJ221 | M.RESISTOR CH 1/16W 220 | 1 | |
| R3206 | ERJ2GEJ222 | M.RESISTOR CH 1/16W 2.2K | 1 | |
| R3207 | ERJ2GEJ332 | M.RESISTOR CH 1/16W 3.3K | 1 | |
| R3208,09 | ERJ2GEJ103 | M.RESISTOR CH 1/16W 10K | 2 | |
| R3210 | ERJ2GEJ1R0 | M.RESISTOR CH 1/16W 1 | 1 | |
| R3211,12 | ERJ2GEJ102 | M.RESISTOR CH 1/16W 1K | 2 | |
| R3234 | ERJ2GEJ472 | M.RESISTOR CH 1/16W 4.7K | 1 | |
| R3236 | ERJ2GE0R00 | M.RESISTOR CH 1/16W 0 | 1 | |
| R3251-54 | ERJ2RKD560 | M.RESISTOR CH 1/16W 56 | 4 | |
| R3255,56 | ERJ2GEJ103 | M.RESISTOR CH 1/16W 10K | 2 | |
| R3257 | ERJ2RHD622 | M.RESISTOR CH 1/16W 6.2K | 1 | |
| R3258 | ERJ2RHD181 | M.RESISTOR CH 1/16W 180 | 1 | |
| R3259 | ERJ2GEJ473 | M.RESISTOR CH 1/16W 47K | 1 | |
| R3260 | ERJ2GEJ100 | M.RESISTOR CH 1/16W 10 | 1 | |
| R3501 | ERJ2GEJ102 | M.RESISTOR CH 1/16W 1K | 1 | |
| R3503 | ERJ2RHD332 | M.RESISTOR CH 1/16W 3.3K | 1 | |
| R3504 | ERJ2RHD181 | M.RESISTOR CH 1/16W 180 | 1 | |
| R3505,06 | ERJ2RHD102 | M.RESISTOR CH 1/16W 1K | 2 | |
| R3507 | ERJ2RHD392 | M.RESISTOR CH 1/16W 3.9K | 1 | |
| R3514 | ERJ2GEJ223 | M.RESISTOR CH 1/16W 22K | 1 | |
| R3515 | ERJ2GEJ331 | M.RESISTOR CH 1/16W 330 | 1 | |
| R3516 | ERJ2GEJ103 | M.RESISTOR CH 1/16W 10K | 1 | |
| R3549 | ERJ2GEJ272 | M.RESISTOR CH 1/16W 2.7K | 1 | |
| R3550 | ERJ2GEJ152 | M.RESISTOR CH 1/16W 1.5K | 1 | |
| R3551 | ERJ2GEJ473 | M.RESISTOR CH 1/16W 47K | 1 | |
| R3552 | ERJ2GEJ472 | M.RESISTOR CH 1/16W 4.7K | 1 | |
| R3553 | ERJ2GEJ102 | M.RESISTOR CH 1/16W 1K | 1 | |
| R3554 | ERJ2GEJ182 | M.RESISTOR CH 1/16W 1.8K | 1 | |
| R3555 | ERJ2GEJ152 | M.RESISTOR CH 1/16W 1.5K | 1 | |
| R3556 | ERJ2GEJ103 | M.RESISTOR CH 1/16W 10K | 1 | |
| R3557,58 | ERJ2GEJ333 | M.RESISTOR CH 1/16W 33K | 2 | |
| R3560 | ERJ2GEJ222 | M.RESISTOR CH 1/16W 2.2K | 1 | |

Components identified with the mark ⚠ have special characteristics for safety.
When replacing any of these component, use only the same type.

| Ref.No. | Part No. | Part Name & Description | Pcs | Remarks |
|---|---|---|---|---|
| R3561,62 | ERJ2GEJ102 | M.RESISTOR CH 1/16W 1K | 2 | |
| R3563 | ERJ2GEJ222 | M.RESISTOR CH 1/16W 2.2K | 1 | |
| R3564 | ERJ2GEJ563 | M.RESISTOR CH 1/16W 56K | 1 | |
| R3565 | ERJ2GEJ473 | M.RESISTOR CH 1/16W 47K | 1 | |
| R3568 | ERJ2GEJ183 | M.RESISTOR CH 1/16W 18K | 1 | |
| R3570 | ERJ2GE0R00 | M.RESISTOR CH 1/16W 0 | 1 | |
| R3572 | ERJ2GE0R00 | M.RESISTOR CH 1/16W 0 | 1 | |
| R3580 | ERJ2GEJ473 | M.RESISTOR CH 1/16W 47K | 1 | |
| R4000-03 | ERJ2GEJ223 | M.RESISTOR CH 1/16W 22K | 4 | |
| R4004,05 | ERJ2GEJ332 | M.RESISTOR CH 1/16W 3.3K | 2 | |
| R4006-09 | ERJ2GEJ472 | M.RESISTOR CH 1/16W 4.7K | 4 | |
| R4010,11 | ERJ2GEJ104 | M.RESISTOR CH 1/16W 100K | 2 | |
| R4012,13 | ERJ2GEJ472 | M.RESISTOR CH 1/16W 4.7K | 2 | |
| R4014,15 | ERJ2GEJ183 | M.RESISTOR CH 1/16W 18K | 2 | |
| R4016,17 | ERJ3RBD133 | M.RESISTOR CH 1/16W 13K | 2 | |
| R4018-21 | ERJ2RHD223 | M.RESISTOR CH 1/16W 22K | 4 | |
| R4022,23 | ERJ3RBD623 | M.RESISTOR CH 1/16W 62K | 2 | |
| R4024,25 | ERJ2GEJ332 | M.RESISTOR CH 1/16W 3.3K | 2 | |
| R4032 | ERJ2GEJ333 | M.RESISTOR CH 1/16W 33K | 1 | |
| R4033 | ERJ2GEJ223 | M.RESISTOR CH 1/16W 22K | 1 | |
| R4034,35 | ERJ2RHD223 | M.RESISTOR CH 1/16W 22K | 2 | |
| R4036 | EXB24V473J | COMBI.R-R 47K | 1 | |
| R4037 | ERJ2GEJ472 | M.RESISTOR CH 1/16W 4.7K | 1 | |
| R4038,39 | ERJ2RHD223 | M.RESISTOR CH 1/16W 22K | 2 | |
| R4042,43 | ERJ2RHD153 | M.RESISTOR CH 1/16W 15K | 2 | |
| R4044,45 | ERJ2RHD273 | M.RESISTOR CH 1/16W 27K | 2 | |
| R4046-49 | ERJ2RHD223 | M.RESISTOR CH 1/16W 22K | 4 | |
| R4050,51 | ERJ2GE0R00 | M.RESISTOR CH 1/16W 0 | 2 | |
| R4052 | EXB24V473J | COMBI.R-R 47K | 1 | |
| R5004 | ERJ2GEJ182 | M.RESISTOR CH 1/16W 1.8K | 1 | |
| R5006 | ERJ2GEJ222 | M.RESISTOR CH 1/16W 2.2K | 1 | |
| R5009-12 | ERJ2GEJ103 | M.RESISTOR CH 1/16W 10K | 4 | |
| R5013,14 | ERJ2GE0R00 | M.RESISTOR CH 1/16W 0 | 2 | |
| R5015 | ERJ2GEJ102 | M.RESISTOR CH 1/16W 1K | 1 | |
| R6901,02 | ERJ2GEJ330 | M.RESISTOR CH 1/16W 33 | 2 | |
| R9007 | ERJ3GEY0R00 | M.RESISTOR CH 1/16W 0 | 1 | |
| R9010,11 | ERJ3GEY0R00 | M.RESISTOR CH 1/16W 0 | 2 | |
| R9014 | ERJ3GEY0R00 | M.RESISTOR CH 1/16W 0 | 1 | |
| R9023 | ERJ3GEY0R00 | M.RESISTOR CH 1/16W 0 | 1 | |
| R9029 | ERJ6GEYG330 | M.RESISTOR CH 1/10W 33 | 1 | |
| R9031 | ERJ3GEY0R00 | M.RESISTOR CH 1/16W 0 | 1 | |
| | | | | |
| TP9001 | EYF6CU | TEST POINT | 1 | |
| | | | | |
| X2002 | H0J327200051 | CRYSTAL OSCILLATOR | 1 | |
| X2003 | H0J270500024 | CRYSTAL OSCILLATOR | 1 | |
| | | | | |
| | | MISCELLANEOUS | | |
| | | | | |
| | EYF6CU | TEST POINT | 2 | |
| | | | | |
| | | | | |
| | | | | |
| | | | | |
| | | | | |
| ■ E3 | VEP23598B | CAMERA C.B.A. | 1 | (RTL) |
| | | | | |
| | | | | |
| C100 | ECST1AY106Z | T.CAPACITOR CH 10V 10U | 1 | |
| C101 | ECJ0EB1A104K | C.CAPACITOR CH 10V 0.1U | 1 | |
| C102-07 | ECST1AY106Z | T.CAPACITOR CH 10V 10U | 6 | |
| C112-14 | ECST1VY684Z | T.CAPACITOR CH 35V 0.68U | 3 | |
| C115-17 | ECST1EY155 | T.CAPACITOR CH 25V 1.5U | 3 | |
| C121-26 | ECJ0EB1A104K | C.CAPACITOR CH 10V 0.1U | 6 | |
| C127 | ECUX1E471KBQ | C.CAPACITOR CH 25V 470P | 1 | |
| C128 | ECJ0EB1A104K | C.CAPACITOR CH 10V 0.1U | 1 | |
| C129,30 | ECUX1E471KBQ | C.CAPACITOR CH 25V 470P | 2 | |
| C131 | ECJ0EB1A104K | C.CAPACITOR CH 10V 0.1U | 1 | |
| C132,33 | ECUX1E471KBQ | C.CAPACITOR CH 25V 470P | 2 | |
| C134 | ECJ0EB1A104K | C.CAPACITOR CH 10V 0.1U | 1 | |
| C135 | ECUX1E471KBQ | C.CAPACITOR CH 25V 470P | 1 | |
| C136-38 | ECJ0EB1A104K | C.CAPACITOR CH 10V 0.1U | 3 | |
| C139-44 | ECUX1A105KBV | C.CAPACITOR CH 10V 1U | 6 | |
| C145-50 | ECJ0EB1A104K | C.CAPACITOR CH 10V 0.1U | 6 | |
| C152-54 | ECJ0EB1A104K | C.CAPACITOR CH 10V 0.1U | 3 | |
| | | | | |
| | | | | |

| Ref.No. | Part No. | Part Name & Description | Pcs | Remarks |
|---|---|---|---|---|
| C155-57 | ECST1AY106Z | T.CAPACITOR CH 10V 10U | 3 | |
| C701 | ECUX1A105KBV | C.CAPACITOR CH 10V 1U | 1 | |
| C702 | ECJ0EB1E102K | C.CAPACITOR CH 25V 1000P | 1 | |
| C703 | F1G1C822A040 | C.CAPACITOR CH 16V 8200P | 1 | |
| C704 | ECJ0EB1E222K | C.CAPACITOR CH 25V 2200P | 1 | |
| C705 | ECJ0EC1H390J | C.CAPACITOR CH 50V 39P | 1 | |
| C706,07 | ECJ0EB1C103K | C.CAPACITOR CH 16V 0.01U | 2 | |
| C708 | ECJ0EB1E272K | C.CAPACITOR CH 25V 2700P | 1 | |
| C709 | ECJ0EB1E222K | C.CAPACITOR CH 25V 2200P | 1 | |
| C710 | ECJ0EB1E472K | C.CAPACITOR CH 25V 4700P | 1 | |
| C711,12 | ECJ0EB1C103K | C.CAPACITOR CH 16V 0.01U | 2 | |
| C713 | ECUX1E471KBQ | C.CAPACITOR CH 25V 470P | 1 | |
| C714 | F3G1A4760002 | T.CAPACITOR CH 10V 47U | 1 | |
| C715 | ECJ0EB1A104K | C.CAPACITOR CH 10V 0.1U | 1 | |
| C716 | ECJ0EB1E102K | C.CAPACITOR CH 25V 1000P | 1 | |
| C717 | ECUM1E224KBN | C.CAPACITOR CH 25V 0.22U | 1 | |
| C718 | ECJ0EC1H151J | C.CAPACITOR CH 50V 150P | 1 | |
| C719 | ECUX1A224KBV | C.CAPACITOR CH 10V 0.22U | 1 | |
| C720 | ECUX1A105KBV | C.CAPACITOR CH 10V 1U | 1 | |
| C721 | ECUX1A105KBN | C.CAPACITOR CH 10V 1U | 1 | |
| C722,23 | ECUX1A105KBV | C.CAPACITOR CH 10V 1U | 2 | |
| C724 | F3F1D4750002 | T.CAPACITOR CH 20V 4.7U | 1 | |
| C725 | ECJ0EB1A104K | C.CAPACITOR CH 10V 0.1U | 1 | |
| C727,28 | ECJ0EB1A104K | C.CAPACITOR CH 10V 0.1U | 2 | |
| C729 | ECJ0EB1A473K | C.CAPACITOR CH 10V 0.047U | 1 | |
| C730 | F1G1E392A056 | C.CAPACITOR CH 25V 3900P | 1 | |
| C734 | ECUX1E471KBQ | C.CAPACITOR CH 25V 470P | 1 | |
| C735 | ECJ0EB1C103K | C.CAPACITOR CH 16V 0.01U | 1 | |
| C737 | ECJ0EB1E472K | C.CAPACITOR CH 25V 4700P | 1 | |
| C738 | ECJ0EB1C103K | C.CAPACITOR CH 16V 0.01U | 1 | |
| C744 | ECUX1A105KBV | C.CAPACITOR CH 10V 1U | 1 | |
| C745 | F3G1A4760002 | T.CAPACITOR CH 10V 47U | 1 | |
| C746 | ECUX1A105KBV | C.CAPACITOR CH 10V 1U | 1 | |
| C747 | ECJ0EB1C103K | C.CAPACITOR CH 16V 0.01U | 1 | |
| C748 | ECUX1A105KBV | C.CAPACITOR CH 10V 1U | 1 | |
| C750 | ECJ0EB1E472K | C.CAPACITOR CH 25V 4700P | 1 | |
| C751 | ECUX1E471KBQ | C.CAPACITOR CH 25V 470P | 1 | |
| C752 | F1G1E392A056 | C.CAPACITOR CH 25V 3900P | 1 | |
| C753 | ECJ0EB1C103K | C.CAPACITOR CH 16V 0.01U | 1 | |
| C754 | ECJ0EB1A104K | C.CAPACITOR CH 10V 0.1U | 1 | |
| C755 | ECJ0EB1A473K | C.CAPACITOR CH 10V 0.047U | 1 | |
| C757-59 | ECJ0EB1A104K | C.CAPACITOR CH 10V 0.1U | 3 | |
| C763 | ECUX1A105KBV | C.CAPACITOR CH 10V 1U | 1 | |
| C776 | F3F1D4750002 | T.CAPACITOR CH 20V 4.7U | 1 | |
| C777 | ECJ0EB1A104K | C.CAPACITOR CH 10V 0.1U | 1 | |
| C779 | ECUX1A105KBN | C.CAPACITOR CH 10V 1U | 1 | |
| C780 | F3F1C1060002 | T.CAPACITOR CH 16V 10U | 1 | |
| C781 | ECJ0EB1A104K | C.CAPACITOR CH 10V 0.1U | 1 | |
| C782 | F3F1C1060002 | T.CAPACITOR CH 16V 10U | 1 | |
| C783 | ECJ0EB1A104K | C.CAPACITOR CH 10V 0.1U | 1 | |
| C784 | F3F1C1060002 | T.CAPACITOR CH 16V 10U | 1 | |
| C785 | F3G1A4760002 | T.CAPACITOR CH 10V 47U | 1 | |
| C786-88 | ECUX1C104KBV | C.CAPACITOR CH 16V 0.1U | 3 | |
| C789 | ECUX1C105KBN | C.CAPACITOR CH 10V 1U | 1 | |
| C790 | ECJ0EB1C103K | C.CAPACITOR CH 16V 0.01U | 1 | |
| C791 | ECUX1C104KBV | C.CAPACITOR CH 16V 0.1U | 1 | |
| C794 | ECJ0EB1A104K | C.CAPACITOR CH 10V 0.1U | 1 | |
| C796 | ECUX1C274KBN | C.CAPACITOR CH 16V 0.27U | 1 | |
| C797 | ECJ0EB1C103K | C.CAPACITOR CH 16V 0.01U | 1 | |
| C798 | ECJ0EB1A104K | C.CAPACITOR CH 10V 0.1U | 1 | |
| C805 | F3E0J106A005 | T.CAPACITOR CH6.3V 10U | 1 | |
| C807 | F3E0J106A005 | T.CAPACITOR CH6.3V 10U | 1 | |
| C813 | ECUX1A105KBV | C.CAPACITOR CH 10V 1U | 1 | |
| C900 | ECUX1A105KBV | C.CAPACITOR CH 10V 1U | 1 | |
| C901 | F3E0J106A005 | T.CAPACITOR CH6.3V 10U | 1 | |
| C902 | ECJ0EB1A104K | C.CAPACITOR CH 10V 0.1U | 1 | |
| C903 | ECUX1A105KBV | C.CAPACITOR CH 10V 1U | 1 | |
| C927 | ECJ0EB1E102K | C.CAPACITOR CH 25V 1000P | 1 | |
| C928 | ECJ0EB1E472K | C.CAPACITOR CH 25V 4700P | 1 | |
| C929 | ECJ0EB1C103K | C.CAPACITOR CH 16V 0.01U | 1 | |
| C930 | ECUX1A105KBV | C.CAPACITOR CH 10V 1U | 1 | |
| C932 | ECJ0EB1A104K | C.CAPACITOR CH 10V 0.1U | 1 | |
| C933 | ECUX1A105KBV | C.CAPACITOR CH 10V 1U | 1 | |
| C934 | ECUX1A224KBV | C.CAPACITOR CH 10V 0.22U | 1 | |
| C935 | ECJ0EB1E102K | C.CAPACITOR CH 25V 1000P | 1 | |
| | | | | |
| | | | | |

Components identified with the mark ⚠ have special characteristics for safety.
When replacing any of these component, use only the same type.

| Ref.No. | Part No. | Part Name & Description | Pcs | Remarks |
|---|---|---|---|---|
| C936 | ECUX1A224KBV | C.CAPACITOR CH 10V 0.22U | 1 | |
| C937 | ECJ0EC1H151J | C.CAPACITOR CH 50V 150P | 1 | |
| C938 | ECJ0EB1A104K | C.CAPACITOR CH 10V 0.1U | 1 | |
| C940 | F3F1C1060002 | T.CAPACITOR CH 16V 10U | 1 | |
| C941 | ECUX1A105KBV | C.CAPACITOR CH 10V 1U | 1 | |
| C1000 | ECST1AY106Z | T.CAPACITOR CH 10V 10U | 1 | |
| C1001 | ECJ0EB1A104K | C.CAPACITOR CH 10V 0.1U | 1 | |
| C1002,03 | F3F1A226A001 | T.CAPACITOR CH 10V 22U | 2 | |
| C1004 | ECST1AY106Z | T.CAPACITOR CH 10V 10U | 1 | |
| C1010-12 | ECJ0EB1A104K | C.CAPACITOR CH 10V 0.1U | 3 | |
| C1017 | F3G1A4760002 | T.CAPACITOR CH 10V 47U | 1 | |
| C1018-23 | ECJ0EB1A104K | C.CAPACITOR CH 10V 0.1U | 6 | |
| C1027,28 | ECST1EX475 | T.CAPACITOR CH 25V 4.7U | 2 | |
| C1029 | ECJ0EF1C104Z | C.CAPACITOR CH 16V 0.1U | 1 | |
| C1030-33 | ECJ0EB1A104K | C.CAPACITOR CH 10V 0.1U | 4 | |
| C1035 | ECUX1E105KBM | C.CAPACITOR CH 25V 1U | 1 | |
| C1036-38 | ECJ0EB1A104K | C.CAPACITOR CH 10V 0.1U | 3 | |
| C1039 | ECST1AY106Z | T.CAPACITOR CH 10V 10U | 1 | |
| C1043 | ECJ0EB1A104K | C.CAPACITOR CH 10V 0.1U | 1 | |
| C1045 | F1H0J1050022 | C.CAPACITOR CH6.3V 1U | 1 | |
| C1046 | ECJ0EB1A104K | C.CAPACITOR CH 10V 0.1U | 1 | |
| C1048 | F3G1A4760002 | T.CAPACITOR CH 10V 47U | 1 | |
| C1049 | F1H0J1050022 | C.CAPACITOR CH6.3V 1U | 1 | |
| C1051,52 | F1H1H104A783 | C.CAPACITOR CH 50V 0.1U | 2 | |
| C1053 | F3G1A4760002 | T.CAPACITOR CH 10V 47U | 1 | |
| C1054 | F1H1H104A783 | C.CAPACITOR CH 50V 0.1U | 1 | |
| C1055 | F1K1H1050002 | C.CAPACITOR CH 50V 1U | 1 | |
| C1056-61 | ECJ0EB1A104K | C.CAPACITOR CH 10V 0.1U | 6 | |
| C1062,63 | F1L1E1060018 | C.CAPACITOR CH 25V 10U | 2 | |
| C1064,65 | ECJ0EC1H220J | C.CAPACITOR CH 50V 22P | 2 | |
| C1067 | F1L1E1060018 | C.CAPACITOR CH 25V 10U | 1 | |
| C1069,70 | ECJ0EB1A104K | C.CAPACITOR CH 10V 0.1U | 2 | |
| C1071 | F1L1E1060018 | C.CAPACITOR CH 25V 10U | 1 | |
| C1079 | ECJ0EB1A104K | C.CAPACITOR CH 10V 0.1U | 1 | |
| C1084 | ECJ0EB1A104K | C.CAPACITOR CH 10V 0.1U | 1 | |
| C1085 | ECUM1H103KBN | C.CAPACITOR CH 50V 0.01U | 1 | F1J1H103A010 |
| C1086-88 | ECJ0EB1A104K | C.CAPACITOR CH 10V 0.1U | 3 | |
| C1089 | ECJ0EC1H220J | C.CAPACITOR CH 50V 22P | 1 | |
| C1090-92 | ECJ0EB1A104K | C.CAPACITOR CH 10V 0.1U | 3 | |
| C1093 | ECST1AY106Z | T.CAPACITOR CH 10V 10U | 1 | |
| C1094 | ECJ0EB1A104K | C.CAPACITOR CH 10V 0.1U | 1 | |
| C1601 | ECUX1E105KBM | C.CAPACITOR CH 25V 1U | 1 | |
| C1602 | ECUX1A105KBV | C.CAPACITOR CH 10V 1U | 1 | |
| C1603 | ECUX1H472KBV | C.CAPACITOR CH 50V 4700P | 1 | |
| C1604 | ECUX1E105KBM | C.CAPACITOR CH 25V 1U | 1 | |
| C1605 | F1J0J475A008 | C.CAPACITOR CH6.3V 4.7U | 1 | |
| C1606 | ECUX1A105KBV | C.CAPACITOR CH 10V 1U | 1 | |
| C1651 | ECUX1A105KBV | C.CAPACITOR CH 10V 1U | 1 | |
| C1652 | ECUX1H472KBV | C.CAPACITOR CH 50V 4700P | 1 | |
| C1653 | ECUX1A105KBV | C.CAPACITOR CH 10V 1U | 1 | |
| C1655 | F1H1H104A783 | C.CAPACITOR CH 50V 0.1U | 1 | |
| C1656 | ECUX1A105KBV | C.CAPACITOR CH 10V 1U | 1 | |
| C1657 | ECJ0EB1E102K | C.CAPACITOR CH 25V 1000P | 1 | |
| C1660,61 | ECJ0EB1A104K | C.CAPACITOR CH 10V 0.1U | 2 | |
| C2000 | ECST1AY106Z | T.CAPACITOR CH 10V 10U | 1 | |
| C2001 | ECST0JY106R | T.CAPACITOR CH6.3V 10U | 1 | |
| C2003,04 | ECJ0EB1A104K | C.CAPACITOR CH 10V 0.1U | 2 | |
| C2006 | ECJ0EB1A104K | C.CAPACITOR CH 10V 0.1U | 1 | |
| C2007 | ECST0JY106R | T.CAPACITOR CH6.3V 10U | 1 | |
| C2008-10 | ECJ0EB1A104K | C.CAPACITOR CH 10V 0.1U | 3 | |
| C2011,12 | ECJ0EB1C153K | C.CAPACITOR CH 16V 0.015U | 2 | |
| C2013 | ECJ0EB1A104K | C.CAPACITOR CH 10V 0.1U | 1 | |
| C3000 | ECJ0EB1A104K | C.CAPACITOR CH 10V 0.1U | 1 | |
| C3001 | ECJ0EB1C103K | C.CAPACITOR CH 16V 0.01U | 1 | |
| C3002 | ECJ0EB1A104K | C.CAPACITOR CH 10V 0.1U | 1 | |
| C3003 | ECJ0EB1C103K | C.CAPACITOR CH 16V 0.01U | 1 | |
| C3004-06 | ECJ0EB1A104K | C.CAPACITOR CH 10V 0.1U | 3 | |
| C3007 | F1G1H5R00004 | C.CAPACITOR CH 50V 5P | 1 | |
| C3008 | F1G1H8R00003 | C.CAPACITOR CH 50V 8P | 1 | |
| C3009 | ECJ0EB1A104K | C.CAPACITOR CH 10V 0.1U | 1 | |
| C3014 | ECJ0EB1A104K | C.CAPACITOR CH 10V 0.1U | 1 | |
| C3020 | ECJ0EB1A104K | C.CAPACITOR CH 10V 0.1U | 1 | |
| C3021 | ECJ0EB1C153K | C.CAPACITOR CH 16V 0.015U | 1 | |
| C3022 | ECJ0EB1A104K | C.CAPACITOR CH 10V 0.1U | 1 | |
| C3023 | ECJ0EB1C153K | C.CAPACITOR CH 16V 0.015U | 1 | |

| Ref.No. | Part No. | Part Name & Description | Pcs | Remarks |
|---|---|---|---|---|
| C3024 | ECST1AY106Z | T.CAPACITOR CH 10V 10U | 1 | |
| C3025 | ECJ0EB1A104K | C.CAPACITOR CH 10V 0.1U | 1 | |
| C3026 | ECST1AY106Z | T.CAPACITOR CH 10V 10U | 1 | |
| C3027 | ECJ0EB1A104K | C.CAPACITOR CH 10V 0.1U | 1 | |
| C3029 | ECUX1A105KBV | C.CAPACITOR CH 10V 1U | 1 | |
| C3030 | ECJ0EB1A104K | C.CAPACITOR CH 10V 0.1U | 1 | |
| C3031 | ECST1AY106Z | T.CAPACITOR CH 10V 10U | 1 | |
| C3032 | ECJ0EB1A104K | C.CAPACITOR CH 10V 0.1U | 1 | |
| C3033 | ECST1AY106Z | T.CAPACITOR CH 10V 10U | 1 | |
| C3034 | ECJ0EB1A104K | C.CAPACITOR CH 10V 0.1U | 1 | |
| C4112 | ECJ0EB1A104K | C.CAPACITOR CH 10V 0.1U | 1 | |
| C4120 | ECJ1VB1H103K | C.CAPACITOR CH 50V 0.01U | 1 | |
| C4121 | ECUX1H222KBV | C.CAPACITOR CH 50V 2200P | 1 | |
| C4122 | ECJ1VB1H103K | C.CAPACITOR CH 50V 0.01U | 1 | |
| C4123 | ECUX1H222KBV | C.CAPACITOR CH 50V 2200P | 1 | |
| C4124 | ECJ0EB1A104K | C.CAPACITOR CH 10V 0.1U | 1 | |
| C4125 | F3G1C2260001 | T.CAPACITOR CH 16V 22U | 1 | |
| | | | | |
| D1001 | MA3S132A0L | DIODE | 1 | |
| D1601 | MA3S132E0L | DIODE | 1 | |
| D3000 | B0JCDD000002 | DIODE | 1 | |
| | | | | |
| IC1 | C0CBABC00094 | IC | 1 | |
| IC2 | NJM431U | IC | 1 | C0DBEZC00003 |
| IC104-06 | C1AB00001677 | IC | 3 | |
| IC701 | C0ABCA000053 | IC | 1 | |
| IC702 | C1AB00001159 | IC | 1 | |
| IC703 | C0CBAEC00006 | IC | 1 | |
| IC704 | C1AB00001262 | IC | 1 | |
| IC710 | C0GBG0000028 | IC | 1 | |
| IC711 | C0CBADC00034 | IC | 1 | |
| IC713 | C0CBADC00034 | IC | 1 | |
| IC717 | TC75W54FU | IC | 1 | |
| IC719 | C0CBADC00034 | IC | 1 | |
| IC927 | C0ABCA000053 | IC | 1 | |
| IC928 | C0ABAA000043 | IC | 1 | |
| IC929 | C0CBADC00034 | IC | 1 | |
| IC1000 | C1ZBZ0002385 | PLD | 1 | |
| IC1001 | C0JBAB000004 | IC | 1 | |
| IC1002 | C0JBAF000162 | IC | 1 | |
| IC1003 | C0JBAB000003 | IC | 1 | |
| IC1004-06 | TC7SH32FU | IC | 3 | |
| IC1007 | C0JBAE000140 | IC | 1 | |
| IC1008 | C0JBAA000102 | IC | 1 | |
| IC1010 | TC7SH04FU | IC | 1 | |
| IC1011 | C0JBAA000102 | IC | 1 | |
| IC1013 | C0JBAD000071 | IC | 1 | |
| IC1014 | TC7SH32FU | IC | 1 | |
| IC1015,16 | C0JBAB000543 | IC | 2 | |
| IC1022,23 | UPD16510GR | IC | 2 | |
| IC1024 | C0JBAA000182 | IC | 1 | |
| IC1025 | C0JBAE000140 | IC | 1 | |
| IC2000 | MN7GD02B5DB | IC | 1 | |
| IC2002 | TC7W74FU | IC | 1 | |
| IC2003 | C0JBAF000162 | IC | 1 | |
| IC3000 | TC7SH04FU | IC | 1 | |
| IC3001 | C0FBAF000029 | IC | 1 | |
| IC3002,03 | TC7SH14FU | IC | 2 | |
| IC3005 | C0JBAA000102 | IC | 1 | |
| IC3006 | C3EBHC000015 | IC | 1 | |
| IC3500 | MN103S33NSA | IC | 1 | |
| IC4105 | C0ABAA000046 | IC | 1 | |
| | | | | |
| L100-02 | VLQ0807K100 | COIL 10UH | 3 | G1C100K00024 |
| L701 | VLQ0807K100 | COIL 10UH | 1 | G1C100K00024 |
| L702 | VLQ0807K220 | COIL 22UH | 1 | G1C220K00016 |
| L703 | VLQ0807K100 | COIL 10UH | 1 | G1C100K00024 |
| L708,09 | VLQ0807K100 | COIL 10UH | 2 | G1C100K00024 |
| L900 | VLQ0807K100 | COIL 10UH | 1 | G1C100K00024 |
| L927 | VLQ0807K100 | COIL 10UH | 1 | G1C100K00024 |
| L1000,01 | G1C100K00025 | COIL 10UH | 2 | |
| L1002 | VLQ0807K100 | COIL 10UH | 1 | G1C100K00024 |
| L1003 | G1C100KA0004 | COIL 10UH | 1 | |
| L1006 | VLQ0807K100 | COIL 10UH | 1 | G1C100K00024 |
| L2000 | VLQ0807K100 | COIL 10UH | 1 | G1C100K00024 |

Components identified with the mark ⚠ have special characteristics for safety.
When replacing any of these component, use only the same type.

| Ref.No. | Part No. | Part Name & Description | Pcs | Remarks |
|---|---|---|---|---|
| L2001 | G1C4R7MA0031 | COIL 4.7UH | 1 | |
| L2003 | G1C100K00019 | COIL 10UH | 1 | |
| L3001 | VLQ0807K100 | COIL 10UH | 1 | G1C100K00024 |
| L4104 | G1C100K00019 | COIL 10UH | 1 | |
| | | | | |
| P1 | K1KA40A00217 | CONNECTOR (MALE) | 1 | |
| P2 | K1KAC0A00023 | CONNECTOR (MALE) | 1 | |
| P3 | K1MN20B00028 | CONNECTOR | 1 | |
| P4 | K1MN10A00045 | CONNECTOR | 1 | |
| P5 | VJP3949A080H | CONNECTOR (MALE) | 1 | |
| P6 | K1KA40A00216 | CONNECTOR (MALE) | 1 | |
| P7 | VJS3791D016 | CONNECTOR (FEMALE) | 1 | |
| P8 | VJS3826C050 | CONNECTOR (FEMALE) | 1 | |
| | | | | |
| Q701 | 2SB0970X0L | TRANSISTOR | 1 | |
| Q702 | B1ADGD000005 | TRANSISTOR | 1 | |
| Q708 | 2SB0970X0L | TRANSISTOR | 1 | |
| Q927 | 2SD2216J0L | TRANSISTOR | 1 | |
| Q928 | 2SD0601A0L | TRANSISTOR | 1 | |
| Q1601 | 2SB1462J0L | TRANSISTOR | 1 | |
| Q1602 | XP1501 | TRANSISTOR-RESISTOR | 1 | |
| Q1603 | 2SD1819A-R | TRANSISTOR | 1 | |
| Q1604 | 2SB1462J0L | TRANSISTOR | 1 | |
| Q1605 | 2SD2216J0L | TRANSISTOR | 1 | |
| Q1606 | 2SB1462J0L | TRANSISTOR | 1 | |
| Q1651 | 2SD2216J0L | TRANSISTOR | 1 | |
| Q1652 | XP1401 | TRANSISTOR-RESISTOR | 1 | |
| Q1653 | 2SB1218A-R | TRANSISTOR | 1 | |
| Q1654 | 2SD2216J0L | TRANSISTOR | 1 | |
| Q3000 | XN0460100L | TRANSISTOR-RESISTOR | 1 | |
| Q3001 | 2SD1979 | TRANSISTOR | 1 | |
| | | | | |
| QR701 | UN9211 | TRANSISTOR-RESISTOR | 1 | |
| QR705 | UN9211 | TRANSISTOR-RESISTOR | 1 | |
| QR708,09 | UN9213 | TRANSISTOR-RESISTOR | 2 | |
| QR1601 | UNR9113J0L | TRANSISTOR | 1 | |
| QR1602 | UNR9111J0L | TRANSISTOR | 1 | |
| QR1651 | UN9213 | TRANSISTOR-RESISTOR | 1 | |
| QR3000,01 | UNR9215J0L | TRANSISTOR | 2 | |
| QR3002 | B1GDBEJG0002 | TRANSISTOR | 1 | |
| | | | | |
| R1,R2 | ERJ3GEY0R00 | M.RESISTOR CH 1/16W 0 | 2 | |
| R49 | ERJ3GEY0R00 | M.RESISTOR CH 1/16W 0 | 1 | |
| R50 | ERJ2GE0R00 | M.RESISTOR CH 1/16W 0 | 1 | |
| R100-02 | ERJ2GE0R00 | M.RESISTOR CH 1/16W 0 | 3 | |
| R110-12 | ERJ3GEY0R00 | M.RESISTOR CH 1/16W 0 | 3 | |
| R701 | ERJ2GEJ272 | M.RESISTOR CH 1/16W 2.7K | 1 | |
| R702 | ERJ2GEJ473 | M.RESISTOR CH 1/16W 47K | 1 | |
| R703,04 | ERJ2GEJ272 | M.RESISTOR CH 1/16W 2.7K | 2 | |
| R705 | ERJ2GEJ473 | M.RESISTOR CH 1/16W 47K | 1 | |
| R706 | ERJ2GEJ472 | M.RESISTOR CH 1/16W 4.7K | 1 | |
| R707 | ERJ2GEJ104 | M.RESISTOR CH 1/16W 100K | 1 | |
| R708 | ERJ2GEJ103 | M.RESISTOR CH 1/16W 10K | 1 | |
| R709 | ERJ2GE0R00 | M.RESISTOR CH 1/16W 0 | 1 | |
| R714 | ERJ2GEJ333 | M.RESISTOR CH 1/16W 33K | 1 | |
| R715 | ERJ2GEJ473 | M.RESISTOR CH 1/16W 47K | 1 | |
| R716 | ERJ2GEJ472 | M.RESISTOR CH 1/16W 4.7K | 1 | |
| R718 | ERJ2GEJ472 | M.RESISTOR CH 1/16W 4.7K | 1 | |
| R719 | ERJ2GEJ274 | M.RESISTOR CH 1/16W 270K | 1 | |
| R720 | ERJ2GEJ333 | M.RESISTOR CH 1/16W 33K | 1 | |
| R721 | ERJ2GEJ473 | M.RESISTOR CH 1/16W 47K | 1 | |
| R722 | ERJ2GEJ224 | M.RESISTOR CH 1/16W 220K | 1 | |
| R723,24 | ERJ6RBB472 | M.RESISTOR CH 1/10W 4.7K | 2 | |
| R725,26 | ERJ2GEJ103 | M.RESISTOR CH 1/16W 10K | 2 | |
| R727 | ERJ2GEJ224 | M.RESISTOR CH 1/16W 220K | 1 | |
| R728 | ERJ2GEJ473 | M.RESISTOR CH 1/16W 47K | 1 | |
| R729 | ERJ2GEJ472 | M.RESISTOR CH 1/16W 4.7K | 1 | |
| R730 | ERJ2GEJ103 | M.RESISTOR CH 1/16W 10K | 1 | |
| R731 | ERJ2GEJ124 | M.RESISTOR CH 1/16W 120K | 1 | |
| R732 | ERJ2GEJ333 | M.RESISTOR CH 1/16W 33K | 1 | |
| R733 | ERJ2GEJ563 | M.RESISTOR CH 1/16W 56K | 1 | |
| R734,35 | ERJ3GEYJ2R2 | M.RESISTOR CH 1/16W 2.2 | 2 | |
| R737 | ERJ2GEJ102 | M.RESISTOR CH 1/16W 1K | 1 | |
| R738 | ERJ2GE0R00 | M.RESISTOR CH 1/16W 0 | 1 | |
| R739 | ERJ2GEJ472 | M.RESISTOR CH 1/16W 4.7K | 1 | |

| Ref.No. | Part No. | Part Name & Description | Pcs | Remarks |
|---|---|---|---|---|
| R740 | ERJ2GEJ103 | M.RESISTOR CH 1/16W 10K | 1 | |
| R741 | ERJ2GEJ182 | M.RESISTOR CH 1/16W 1.8K | 1 | |
| R742,43 | ERJ2GEJ472 | M.RESISTOR CH 1/16W 4.7K | 2 | |
| R744 | ERJ2GEJ104 | M.RESISTOR CH 1/16W 100K | 1 | |
| R745 | ERJ6GEYJ3R9 | M.RESISTOR CH 1/10W 3.9 | 1 | |
| R746 | ERJ2GEJ155 | M.RESISTOR CH 1/16W 1.5M | 1 | |
| R747 | ERJ2GEJ470 | M.RESISTOR CH 1/16W 47 | 1 | |
| R748 | ERJ2GEJ103 | M.RESISTOR CH 1/16W 10K | 1 | |
| R749 | ERJ2GEJ473 | M.RESISTOR CH 1/16W 47K | 1 | |
| R750 | ERJ2GEJ393 | M.RESISTOR CH 1/16W 39K | 1 | |
| R751 | ERJ2GEJ473 | M.RESISTOR CH 1/16W 47K | 1 | |
| R752 | ERJ2GEJ333 | M.RESISTOR CH 1/16W 33K | 1 | |
| R754 | ERJ2GEJ224 | M.RESISTOR CH 1/16W 220K | 1 | |
| R755 | ERJ2GEJ473 | M.RESISTOR CH 1/16W 47K | 1 | |
| R760 | ERJ2GEJ103 | M.RESISTOR CH 1/16W 10K | 1 | |
| R765 | ERJ2GEJ101 | M.RESISTOR CH 1/16W 100 | 1 | |
| R768 | ERJ3GEYJ3R3 | M.RESISTOR CH 1/16W 3.3 | 1 | |
| R770 | ERJ2GEJ101 | M.RESISTOR CH 1/16W 100 | 1 | |
| R771 | ERJ3GEYJ3R3 | M.RESISTOR CH 1/16W 3.3 | 1 | |
| R776 | ERJ2GEJ273 | M.RESISTOR CH 1/16W 27K | 1 | |
| R778 | ERJ2GEJ473 | M.RESISTOR CH 1/16W 47K | 1 | |
| R779 | ERJ2GEJ103 | M.RESISTOR CH 1/16W 10K | 1 | |
| R780 | ERJ2GEJ274 | M.RESISTOR CH 1/16W 270K | 1 | |
| R781 | ERJ2GEJ473 | M.RESISTOR CH 1/16W 47K | 1 | |
| R786 | ERJ2GEJ393 | M.RESISTOR CH 1/16W 39K | 1 | |
| R787 | ERJ2GEJ473 | M.RESISTOR CH 1/16W 47K | 1 | |
| R788 | ERJ2GEJ182 | M.RESISTOR CH 1/16W 1.8K | 1 | |
| R789 | ERJ2GEJ103 | M.RESISTOR CH 1/16W 10K | 1 | |
| R793 | ERJ2GEJ473 | M.RESISTOR CH 1/16W 47K | 1 | |
| R794 | ERJ2GEJ222 | M.RESISTOR CH 1/16W 2.2K | 1 | |
| R797 | ERJ2GEJ474 | M.RESISTOR CH 1/16W 470K | 1 | |
| R798 | ERJ2GEJ103 | M.RESISTOR CH 1/16W 10K | 1 | |
| R799 | ERJ2GEJ224 | M.RESISTOR CH 1/16W 220K | 1 | |
| R801,02 | ERJ2GE0R00 | M.RESISTOR CH 1/16W 0 | 2 | |
| R803,04 | ERJ2GEJ472 | M.RESISTOR CH 1/16W 4.7K | 2 | |
| R805 | ERJ2GE0R00 | M.RESISTOR CH 1/16W 0 | 1 | |
| R807 | ERJ2GEJ103 | M.RESISTOR CH 1/16W 10K | 1 | |
| R809 | ERJ2GE0R00 | M.RESISTOR CH 1/16W 0 | 1 | |
| R810 | ERJ2GEJ103 | M.RESISTOR CH 1/16W 10K | 1 | |
| R823 | ERJ2GE0R00 | M.RESISTOR CH 1/16W 0 | 1 | |
| R825 | ERJ2GE0R00 | M.RESISTOR CH 1/16W 0 | 1 | |
| R862 | ERJ2GEJ104 | M.RESISTOR CH 1/16W 100K | 1 | |
| R892 | ERJ2GEJ104 | M.RESISTOR CH 1/16W 100K | 1 | |
| R896 | ERJ2GEJ104 | M.RESISTOR CH 1/16W 100K | 1 | |
| R901 | ERJ2GE0R00 | M.RESISTOR CH 1/16W 0 | 1 | |
| R902 | ERJ2GEJ473 | M.RESISTOR CH 1/16W 47K | 1 | |
| R903 | ERJ2GEJ105 | M.RESISTOR CH 1/16W 1M | 1 | |
| R904-06 | ERJ2GE0R00 | M.RESISTOR CH 1/16W 0 | 3 | |
| R909 | ERJ2GE0R00 | M.RESISTOR CH 1/16W 0 | 1 | |
| R911 | ERJ2GEJ105 | M.RESISTOR CH 1/16W 1M | 1 | |
| R919 | ERJ2GEJ473 | M.RESISTOR CH 1/16W 47K | 1 | |
| R920 | ERJ2GEJ472 | M.RESISTOR CH 1/16W 4.7K | 1 | |
| R926 | ERJ2GE0R00 | M.RESISTOR CH 1/16W 0 | 1 | |
| R927 | ERJ2GEJ684 | M.RESISTOR CH 1/16W 680K | 1 | |
| R928 | ERJ2GEJ103 | M.RESISTOR CH 1/16W 10K | 1 | |
| R929 | ERJ2GEJ564 | M.RESISTOR CH 1/16W 560K | 1 | |
| R930 | ERJ2GEJ334 | M.RESISTOR CH 1/16W 330K | 1 | |
| R931,32 | ERJ2GEJ103 | M.RESISTOR CH 1/16W 10K | 2 | |
| R933 | ERJ2GEJ822 | M.RESISTOR CH 1/16W 8.2K | 1 | |
| R934 | ERJ2GEJ103 | M.RESISTOR CH 1/16W 10K | 1 | |
| R935 | ERJ2GEJ104 | M.RESISTOR CH 1/16W 100K | 1 | |
| R936 | ERJ2GEJ103 | M.RESISTOR CH 1/16W 10K | 1 | |
| R937 | ERJ2GEJ101 | M.RESISTOR CH 1/16W 100 | 1 | |
| R938 | ERJ2GEJ563 | M.RESISTOR CH 1/16W 56K | 1 | |
| R939,40 | ERJ2GEJ472 | M.RESISTOR CH 1/16W 4.7K | 2 | |
| R941 | ERJ2GEJ103 | M.RESISTOR CH 1/16W 10K | 1 | |
| R942 | ERJ2GEJ124 | M.RESISTOR CH 1/16W 120K | 1 | |
| R943 | ERJ2GEJ683 | M.RESISTOR CH 1/16W 68K | 1 | |
| R944 | ERJ2GEJ224 | M.RESISTOR CH 1/16W 220K | 1 | |
| R945 | ERJ2GEJ563 | M.RESISTOR CH 1/16W 56K | 1 | |
| R946 | ERJ2GEJ333 | M.RESISTOR CH 1/16W 33K | 1 | |
| R947 | ERJ2GEJ102 | M.RESISTOR CH 1/16W 1K | 1 | |
| R948 | ERJ3GEYJ221 | M.RESISTOR CH 1/16W 220 | 1 | |
| R949 | ERJ2GEJ104 | M.RESISTOR CH 1/16W 100K | 1 | |
| R954 | ERJ2GE0R00 | M.RESISTOR CH 1/16W 0 | 1 | |

Components identified with the mark ⚠ have special characteristics for safety.
When replacing any of these component, use only the same type.

| Ref.No. | Part No. | Part Name & Description | Pcs | Remarks |
|---|---|---|---|---|
| R979 | ERJ2GEJ103 | M.RESISTOR CH 1/16W 10K | 1 | |
| R980 | ERJ2GE0R00 | M.RESISTOR CH 1/16W 0 | 1 | |
| R990 | ERJ2GE0R00 | M.RESISTOR CH 1/16W 0 | 1 | |
| R991 | ERJ2GEJ103 | M.RESISTOR CH 1/16W 10K | 1 | |
| R992 | ERJ8GEYJ2R2 | M.RESISTOR CH 1/8W 2.2 | 1 | |
| R993 | ERJ2GEJ101 | M.RESISTOR CH 1/16W 100 | 1 | |
| R994 | ERJ2GEJ103 | M.RESISTOR CH 1/16W 10K | 1 | |
| R995,96 | ERJ2GEJ473 | M.RESISTOR CH 1/16W 47K | 2 | |
| R997,98 | ERJ2GEJ103 | M.RESISTOR CH 1/16W 10K | 2 | |
| R999 | ERJ2GEJ104 | M.RESISTOR CH 1/16W 100K | 1 | |
| R1003 | ERJ2GE0R00 | M.RESISTOR CH 1/16W 0 | 1 | |
| R1020 | ERJ3GEYJ103 | M.RESISTOR CH 1/16W 10K | 1 | D0GB103JA002 |
| R1023 | ERJ3GEYJ103 | M.RESISTOR CH 1/16W 10K | 1 | D0GB103JA002 |
| R1029 | ERJ3GEYJ103 | M.RESISTOR CH 1/16W 10K | 1 | D0GB103JA002 |
| R1041 | ERJ3GEYG102 | M.RESISTOR CH 1/16W 1K | 1 | |
| R1056 | ERJ3GEYJ103 | M.RESISTOR CH 1/16W 10K | 1 | D0GB103JA002 |
| R1154 | ERJ3GEYJ103 | M.RESISTOR CH 1/16W 10K | 1 | D0GB103JA002 |
| R1167 | ERJ3GEY0R00 | M.RESISTOR CH 1/16W 0 | 1 | |
| R1175 | ERJ3GEY0R00 | M.RESISTOR CH 1/16W 0 | 1 | |
| R1178,79 | ERJ3GEYJ105 | M.RESISTOR CH 1/16W 1M | 2 | |
| R1182 | ERJ3GEYJ105 | M.RESISTOR CH 1/16W 1M | 1 | |
| R1183 | ERJ2RMJ391 | M.RESISTOR CH 1/16W 390 | 1 | |
| R1185 | ERJ2GEJ331 | M.RESISTOR CH 1/16W 330 | 1 | |
| R1186 | ERJ3GEY0R00 | M.RESISTOR CH 1/16W 0 | 1 | |
| R1189 | ERJ2GE0R00 | M.RESISTOR CH 1/16W 0 | 1 | |
| R1191 | ERJ2GE0R00 | M.RESISTOR CH 1/16W 0 | 1 | |
| R1193 | ERJ2GE0R00 | M.RESISTOR CH 1/16W 0 | 1 | |
| R1194 | ERJ2GEJ101 | M.RESISTOR CH 1/16W 100 | 1 | |
| R1195,96 | ERJ2GE0R00 | M.RESISTOR CH 1/16W 0 | 2 | |
| R1198,99 | ERJ2GE0R00 | M.RESISTOR CH 1/16W 0 | 2 | |
| R1200 | ERJ2GEJ270 | M.RESISTOR CH 1/16W 27 | 1 | |
| R1201-07 | ERJ2GE0R00 | M.RESISTOR CH 1/16W 0 | 7 | |
| R1601 | ERJ2GEJ473 | M.RESISTOR CH 1/16W 47K | 1 | |
| R1602 | ERJ2GEJ224 | M.RESISTOR CH 1/16W 220K | 1 | |
| R1603 | ERJ2GEJ332 | M.RESISTOR CH 1/16W 3.3K | 1 | |
| R1604 | ERJ2GEJ222 | M.RESISTOR CH 1/16W 2.2K | 1 | |
| R1607 | ERJ2GEJ563 | M.RESISTOR CH 1/16W 56K | 1 | |
| R1608 | ERJ2GEJ222 | M.RESISTOR CH 1/16W 2.2K | 1 | |
| R1609 | ERJ2GEJ221 | M.RESISTOR CH 1/16W 220 | 1 | |
| R1610 | ERJ2GEJ473 | M.RESISTOR CH 1/16W 47K | 1 | |
| R1612 | ERJ2RKD274 | M.RESISTOR CH 1/16W 270K | 1 | |
| R1613 | ERJ2RHD223 | M.RESISTOR CH 1/16W 22K | 1 | |
| R1614 | ERJ2RHD563 | M.RESISTOR CH 1/16W 56K | 1 | |
| R1615 | ERJ2GEJ223 | M.RESISTOR CH 1/16W 22K | 1 | |
| R1616 | ERJ2RHD473 | M.RESISTOR CH 1/16W 47K | 1 | |
| R1617 | ERJ2GEJ224 | M.RESISTOR CH 1/16W 220K | 1 | |
| R1618 | ERJ2GE0R00 | M.RESISTOR CH 1/16W 0 | 1 | |
| R1620 | ERJ2GEJ473 | M.RESISTOR CH 1/16W 47K | 1 | |
| R1651 | ERJ2GEJ473 | M.RESISTOR CH 1/16W 47K | 1 | |
| R1652 | ERJ2GEJ224 | M.RESISTOR CH 1/16W 220K | 1 | |
| R1653 | ERJ2GEJ562 | M.RESISTOR CH 1/16W 5.6K | 1 | |
| R1654 | ERJ2GEJ222 | M.RESISTOR CH 1/16W 2.2K | 1 | |
| R1655 | ERJ2GEJ104 | M.RESISTOR CH 1/16W 100K | 1 | |
| R1657 | ERJ2GEJ222 | M.RESISTOR CH 1/16W 2.2K | 1 | |
| R1658 | ERJ2GEJ221 | M.RESISTOR CH 1/16W 220 | 1 | |
| R1659 | ERJ2GEJ473 | M.RESISTOR CH 1/16W 47K | 1 | |
| R1660 | ERJ2GE0R00 | M.RESISTOR CH 1/16W 0 | 1 | |
| R1662 | ERJ2RHD104 | M.RESISTOR CH 1/16W 100K | 1 | |
| R1663 | ERJ2RKD224 | M.RESISTOR CH 1/16W 220K | 1 | |
| R1664 | ERJ2RKD154 | M.RESISTOR CH 1/16W 150K | 1 | |
| R1666 | ERJ2GE0R00 | M.RESISTOR CH 1/16W 0 | 1 | |
| R1667 | ERJ2GEJ104 | M.RESISTOR CH 1/16W 100K | 1 | |
| R1668 | ERJ2GEJ102 | M.RESISTOR CH 1/16W 1K | 1 | |
| R1669,70 | ERJ2GE0R00 | M.RESISTOR CH 1/16W 0 | 2 | |
| R1673 | ERJ2GEJ104 | M.RESISTOR CH 1/16W 100K | 1 | |
| R2003 | ERJ2GE0R00 | M.RESISTOR CH 1/16W 0 | 1 | |
| R2004,05 | ERJ2GEJ223 | M.RESISTOR CH 1/16W 22K | 2 | |
| R2006,07 | ERJ2GEJ471 | M.RESISTOR CH 1/16W 470 | 2 | |
| R2009 | ERJ2GEJ102 | M.RESISTOR CH 1/16W 1K | 1 | |
| R2010,11 | ERJ2GE0R00 | M.RESISTOR CH 1/16W 0 | 2 | |
| R2014 | ERJ2GEJ472 | M.RESISTOR CH 1/16W 4.7K | 1 | |
| R2018 | ERJ2GE0R00 | M.RESISTOR CH 1/16W 0 | 1 | |
| R2022 | ERJ2GE0R00 | M.RESISTOR CH 1/16W 0 | 1 | |
| R2029,30 | ERJ2GEJ473 | M.RESISTOR CH 1/16W 47K | 2 | |
| R2096 | ERJ2GE0R00 | M.RESISTOR CH 1/16W 0 | 1 | |

| Ref.No. | Part No. | Part Name & Description | Pcs | Remarks |
|---|---|---|---|---|
| R3012,13 | ERJ2GEJ102 | M.RESISTOR CH 1/16W 1K | 2 | |
| R3014-16 | ERJ2GEJ103 | M.RESISTOR CH 1/16W 10K | 3 | |
| R3017 | ERJ2GEJ473 | M.RESISTOR CH 1/16W 47K | 1 | |
| R3018 | ERJ2GE0R00 | M.RESISTOR CH 1/16W 0 | 1 | |
| R3019 | ERJ2GEJ103 | M.RESISTOR CH 1/16W 10K | 1 | |
| R3020-22 | ERJ2GEJ473 | M.RESISTOR CH 1/16W 47K | 3 | |
| R3023 | ERJ2GE0R00 | M.RESISTOR CH 1/16W 0 | 1 | |
| R3024 | ERJ2GEJ105 | M.RESISTOR CH 1/16W 1M | 1 | |
| R3026 | ERJ2GEJ105 | M.RESISTOR CH 1/16W 1M | 1 | |
| R3031 | ERJ2GE0R00 | M.RESISTOR CH 1/16W 0 | 1 | |
| R3032 | ERJ2GEJ121 | M.RESISTOR CH 1/16W 120 | 1 | |
| R3033 | ERJ2GEJ472 | M.RESISTOR CH 1/16W 4.7K | 1 | |
| R3034,35 | ERJ2GE0R00 | M.RESISTOR CH 1/16W 0 | 2 | |
| R3036,37 | ERJ2GEJ121 | M.RESISTOR CH 1/16W 120 | 2 | |
| R3038 | ERJ2GE0R00 | M.RESISTOR CH 1/16W 0 | 1 | |
| R3039 | ERJ2GEJ473 | M.RESISTOR CH 1/16W 47K | 1 | |
| R3040 | ERJ2GEJ103 | M.RESISTOR CH 1/16W 10K | 1 | |
| R3041-44 | ERJ2GEJ473 | M.RESISTOR CH 1/16W 47K | 4 | |
| R3046 | ERJ2GEJ102 | M.RESISTOR CH 1/16W 1K | 1 | |
| R3047 | ERJ2GE0R00 | M.RESISTOR CH 1/16W 0 | 1 | |
| R3048 | ERJ2GEJ473 | M.RESISTOR CH 1/16W 47K | 1 | |
| R3049 | ERJ2GEJ332 | M.RESISTOR CH 1/16W 3.3K | 1 | |
| R3050 | ERJ2GE0R00 | M.RESISTOR CH 1/16W 0 | 1 | |
| R3051 | ERJ2GEJ332 | M.RESISTOR CH 1/16W 3.3K | 1 | |
| R3052 | ERJ2GEJ473 | M.RESISTOR CH 1/16W 47K | 1 | |
| R3055 | ERJ2GEJ471 | M.RESISTOR CH 1/16W 470 | 1 | |
| R3057 | ERJ2GEJ471 | M.RESISTOR CH 1/16W 470 | 1 | |
| R3059 | ERJ2GE0R00 | M.RESISTOR CH 1/16W 0 | 1 | |
| R3060 | ERJ2GEJ104 | M.RESISTOR CH 1/16W 100K | 1 | |
| R3061 | ERJ2GEJ682 | M.RESISTOR CH 1/16W 6.8K | 1 | |
| R3062 | ERJ2GEJ473 | M.RESISTOR CH 1/16W 47K | 1 | |
| R3063,64 | ERJ2GE0R00 | M.RESISTOR CH 1/16W 0 | 2 | |
| R3078 | ERJ2GEJ102 | M.RESISTOR CH 1/16W 1K | 1 | |
| R3083,84 | ERJ2GEJ102 | M.RESISTOR CH 1/16W 1K | 2 | |
| R3089 | ERJ2GEJ101 | M.RESISTOR CH 1/16W 100 | 1 | |
| R3091 | ERJ2GEJ101 | M.RESISTOR CH 1/16W 100 | 1 | |
| R3095 | ERJ2GEJ101 | M.RESISTOR CH 1/16W 100 | 1 | |
| R3098 | ERJ2GE0R00 | M.RESISTOR CH 1/16W 0 | 1 | |
| R3105 | ERJ2GEJ102 | M.RESISTOR CH 1/16W 1K | 1 | |
| R3107 | ERJ2GEJ102 | M.RESISTOR CH 1/16W 1K | 1 | |
| R3109,10 | ERJ2GEJ102 | M.RESISTOR CH 1/16W 1K | 2 | |
| R3116 | ERJ2GE0R00 | M.RESISTOR CH 1/16W 0 | 1 | |
| R3118 | ERJ2GEJ332 | M.RESISTOR CH 1/16W 3.3K | 1 | |
| R3154 | ERJ2GEJ473 | M.RESISTOR CH 1/16W 47K | 1 | |
| R3156 | ERJ2GEJ332 | M.RESISTOR CH 1/16W 3.3K | 1 | |
| R3157 | ERJ2GEJ223 | M.RESISTOR CH 1/16W 22K | 1 | |
| R3158 | ERJ2GEJ105 | M.RESISTOR CH 1/16W 1M | 1 | |
| R3163 | ERJ2GEJ473 | M.RESISTOR CH 1/16W 47K | 1 | |
| R3164 | ERJ2GEJ103 | M.RESISTOR CH 1/16W 10K | 1 | |
| R3165 | ERJ2GEJ473 | M.RESISTOR CH 1/16W 47K | 1 | |
| R3166,67 | ERJ2GE0R00 | M.RESISTOR CH 1/16W 0 | 2 | |
| R3168,69 | ERJ2GEJ332 | M.RESISTOR CH 1/16W 3.3K | 2 | |
| R3170-73 | ERJ2GEJ472 | M.RESISTOR CH 1/16W 4.7K | 4 | |
| R3175 | ERJ2GEJ332 | M.RESISTOR CH 1/16W 3.3K | 1 | |
| R3178 | ERJ2GEJ101 | M.RESISTOR CH 1/16W 100 | 1 | |
| R3179 | ERJ2GEJ473 | M.RESISTOR CH 1/16W 47K | 1 | |
| R3181 | ERJ2GEJ101 | M.RESISTOR CH 1/16W 100 | 1 | |
| R3182 | ERJ2GEJ102 | M.RESISTOR CH 1/16W 1K | 1 | |
| R3183 | ERJ2GEJ333 | M.RESISTOR CH 1/16W 33K | 1 | |
| R3184 | ERJ2RHD183 | M.RESISTOR CH 1/16W 18K | 1 | |
| R3185 | ERJ2RHD102 | M.RESISTOR CH 1/16W 1K | 1 | |
| R3186 | ERJ2GE0R00 | M.RESISTOR CH 1/16W 0 | 1 | |
| R3187 | ERJ2GEJ393 | M.RESISTOR CH 1/16W 39K | 1 | |
| R3188 | ERJ2GEJ102 | M.RESISTOR CH 1/16W 1K | 1 | |
| R3189 | ERJ2GE0R00 | M.RESISTOR CH 1/16W 0 | 1 | |
| R3190 | ERJ2GEJ333 | M.RESISTOR CH 1/16W 33K | 1 | |
| R3191,92 | ERJ2GEJ332 | M.RESISTOR CH 1/16W 3.3K | 2 | |
| R3195 | ERJ2GEJ472 | M.RESISTOR CH 1/16W 4.7K | 1 | |
| R3196 | ERJ2GEJ473 | M.RESISTOR CH 1/16W 47K | 1 | |
| R3198,99 | ERJ2GEJ473 | M.RESISTOR CH 1/16W 47K | 2 | |
| R3201 | ERJ2GEJ102 | M.RESISTOR CH 1/16W 1K | 1 | |
| R3207 | ERJ2GE0R00 | M.RESISTOR CH 1/16W 0 | 1 | |
| R3210 | ERJ2GE0R00 | M.RESISTOR CH 1/16W 0 | 1 | |
| R3211 | ERJ2GEJ332 | M.RESISTOR CH 1/16W 3.3K | 1 | |
| R4115-18 | ERJ2GEJ473 | M.RESISTOR CH 1/16W 47K | 4 | |

Components identified with the mark ⚠ have special characteristics for safety.
When replacing any of these component, use only the same type.

| Ref.No. | Part No. | Part Name & Description | Pcs | Remarks |
|---|---|---|---|---|
| R4119,20 | ERJ2GE0R00 | M.RESISTOR CH 1/16W 0 | 2 | |
| R4156 | ERJ2GEJ333 | M.RESISTOR CH 1/16W 33K | 1 | |
| R4157 | ERJ2GEJ103 | M.RESISTOR CH 1/16W 10K | 1 | |
| R4166-71 | ERJ2GE0R00 | M.RESISTOR CH 1/16W 0 | 6 | |
| R4173 | ERJ2GE0R00 | M.RESISTOR CH 1/16W 0 | 1 | |
| | | | | |
| X1000 | H1A3155B0002 | CRYSTAL OSCILLATOR | 1 | |
| X3000 | H0J270500024 | CRYSTAL OSCILLATOR | 1 | |
| | | | | |
| | | MISCELLANEOUS | | |
| | | | | |
| | VSC5623 | CAMERA PCB HEAT SINK (L) | 1 | |
| | VSC5624 | CAMERA PCB HEAT SINK (U) | 1 | |
| | VGQ8094 | COOLING SHEET CR | 1 | |
| | VGQ8096 | COOLING SHEET_C2 | 1 | |
| | VGQ8097 | COOLING SHEET_C3 | 5 | |
| | XQN16+B3FN | SCREW | 2 | |
| | | | | |
| | | | | |
| | | | | |
| | | | | |
| ■ E4 | VEP06F67A | FRONT C.B.A. | 1 | (RTL) |
| | | | | |
| | | | | |
| C6301 | F1H1H104A783 | C.CAPACITOR CH 50V 0.1U | 1 | |
| C6302 | ECST1CX156Z | T.CAPACITOR CH 16V 15U | 1 | |
| C6303 | ECST0JY226 | T.CAPACITOR CH6.3V 22U | 1 | |
| C6304 | F3F1A226A001 | T.CAPACITOR CH 10V 22U | 1 | |
| C6306,07 | F1J0J106A014 | T.CAPACITOR CH6.3V 10U | 2 | |
| C6308 | ECUX1H471KBV | C.CAPACITOR CH 50V 470P | 1 | |
| C6310 | ECUX1A105KBV | C.CAPACITOR CH 10V 1U | 1 | |
| C6312 | ECUX1H471KBV | C.CAPACITOR CH 50V 470P | 1 | |
| C6313 | F1H1H104A783 | C.CAPACITOR CH 50V 0.1U | 1 | |
| C6314 | F3G1C2260001 | T.CAPACITOR CH 16V 22U | 1 | |
| | | | | |
| D6301,02 | B3EA00000029 | LED | 2 | |
| | | | | |
| IC6301 | B3MAZ0000028 | PHOTO DETECTOR | 1 | |
| IC6302 | L2ES00000011 | SENSOR UNIT | 1 | |
| IC6303 | C0ABBA000077 | IC | 1 | |
| IC6304 | C0JBAS000063 | IC | 1 | |
| | | | | |
| L6301-03 | G1C100K00019 | COIL 10UH | 3 | |
| | | | | |
| P6301 | VJS3791D016 | CONNECTOR (FEMALE) | 1 | |
| P6302 | VJS3791D010 | CONNECTOR (FEMALE) | 1 | K1MN10B00021 |
| | | | | |
| R6301 | ERJ3GEYJ470 | M.RESISTOR CH 1/16W 47 | 1 | |
| R6305 | ERJ3GEYJ103 | M.RESISTOR CH 1/16W 10K | 1 | D0GB103JA002 |
| R6306,07 | ERJ3GEYJ474 | M.RESISTOR CH 1/16W 470K | 2 | |
| R6308 | ERJ3GEYG472 | M.RESISTOR CH 1/16W 4.7K | 1 | |
| R6310 | ERJ3GEYJ274 | M.RESISTOR CH 1/16W 270K | 1 | |
| R6311 | ERJ3GEY0R00 | M.RESISTOR CH 1/16W 0 | 1 | |
| | | | | |
| | | MISCELLANEOUS | | |
| | | | | |
| | VMP8013 | FRONT PCB BASE | 1 | |
| | VJF1495 | LED HOLDER | 1 | |
| | XQN16+B3FN | SCREW | 3 | |
| | XQN16+B4FN | SCREW | 1 | |
| | | | | |
| | | | | |
| | | | | |
| | | | | |
| | | | | |
| ■ E5 | VEP04861A | SIDE JACK FPC C.B.A. | 1 | (RTL) |
| | | | | |
| | | | | |
| C4101 | ECJ0EB1A104K | C.CAPACITOR CH 10V 0.1U | 1 | |
| C4102,03 | ECJ1VB1A224K | T.CAPACITOR CH 10V 0.22U | 2 | |
| C4104 | ECJ1VB0J105K | C.CAPACITOR CH 35V 1M | 1 | |
| C4105-08 | ECJ0EB1E472K | C.CAPACITOR CH 25V 4700P | 4 | |
| C4109,10 | ECJ1VB0J105K | C.CAPACITOR CH 35V 1M | 2 | |
| C4111,12 | ECST0JY226 | T.CAPACITOR CH6.3V 22U | 2 | |
| | | | | |
| | | | | |

| Ref.No. | Part No. | Part Name & Description | Pcs | Remarks |
|---|---|---|---|---|
| C4113 | ECJ1VB0J105K | C.CAPACITOR CH 35V 1M | 1 | |
| C4115 | ECST0JY226 | T.CAPACITOR CH6.3V 22U | 1 | |
| | | | | |
| D4101 | MA132WA | DIODE | 1 | |
| D4102 | MA2SD2400L | DIODE | 1 | |
| D4103 | B3GA00000041 | DIODE | 1 | |
| | | | | |
| J4101 | K2HZ104A0002 | S TERMINAL JACK | 1 | |
| J4102 | K2HC106B0010 | AC POWER PLUG | 1 | |
| J4103 | K2HC107B0003 | AC POWER PLUG | 1 | |
| | | | | |
| L4101 | J0JBC0000054 | FILTER | 1 | |
| L4102-04 | J0JAC0000014 | FILTER | 3 | |
| L4105,06 | J0JBC0000054 | FILTER | 2 | |
| L4107 | J0JAC0000014 | FILTER | 1 | |
| L4108-12 | J0JAC0000015 | FILTER | 5 | |
| L4113 | J0JCC0000119 | FILTER | 1 | |
| L4114 | J0JAC0000015 | FILTER | 1 | |
| | | | | |
| P4101 | K1MN33B00023 | CONNECTOR | 1 | |
| | | | | |
| Q4101 | 2SD103000L | TRANSISTOR | 1 | |
| Q4102 | B1ABBE000002 | TRANSISTOR | 1 | |
| Q4103 | 2SD2216J0L | TRANSISTOR | 1 | |
| Q4104 | 2SB1462J0L | TRANSISTOR | 1 | |
| Q4105 | 2SD2216J0L | TRANSISTOR | 1 | |
| Q4106 | 2SB1462J0L | TRANSISTOR | 1 | |
| Q4107 | 2SD1819A-R | TRANSISTOR | 1 | |
| | | | | |
| QR4101 | B1GDBEHH0001 | TRANSISTOR | 1 | |
| | | | | |
| R4101 | ERJ3GEYJ225 | M.RESISTOR CH 1/16W 2.2M | 1 | |
| R4102 | ERJ3GEYJ334 | M.RESISTOR CH 1/16W 330K | 1 | |
| R4103 | ERJ3GEYG472 | M.RESISTOR CH 1/16W 4.7K | 1 | |
| R4104 | ERJ3GEYJ182 | M.RESISTOR CH 1/16W 1.8K | 1 | |
| R4105 | ERJ3GEYJ106 | M.RESISTOR CH 1/16W 10M | 1 | |
| R4106 | ERJ3GEYJ101 | M.RESISTOR CH 1/16W 100 | 1 | |
| R4109 | ERJ3GEYG472 | M.RESISTOR CH 1/16W 4.7K | 1 | |
| R4111 | ERJ3GEYG471 | M.RESISTOR CH 1/16W 470 | 1 | |
| R4112 | ERJ6GEYG103 | M.RESISTOR CH 1/10W 10K | 1 | |
| R4113 | ERJ6GEYG154 | M.RESISTOR CH 1/10W 150K | 1 | |
| R4114 | ERJ6GEYG563 | M.RESISTOR CH 1/10W 56K | 1 | |
| R4115 | ERJ3GEYG102 | M.RESISTOR CH 1/16W 1K | 1 | |
| R4116 | ERJ3GEYJ562 | M.RESISTOR CH 1/16W 5.6K | 1 | |
| R4117 | ERJ3GEYJ151 | M.RESISTOR CH 1/16W 150 | 1 | |
| R4118 | ERJ3GEYG471 | M.RESISTOR CH 1/16W 470 | 1 | |
| R4119 | ERJ6GEYG103 | M.RESISTOR CH 1/10W 10K | 1 | |
| R4120 | ERJ6GEYG154 | M.RESISTOR CH 1/10W 150K | 1 | |
| R4121 | ERJ6GEYG563 | M.RESISTOR CH 1/10W 56K | 1 | |
| R4122 | ERJ3GEYG102 | M.RESISTOR CH 1/16W 1K | 1 | |
| R4123 | ERJ3GEYJ562 | M.RESISTOR CH 1/16W 5.6K | 1 | |
| R4124 | ERJ3GEYJ151 | M.RESISTOR CH 1/16W 150 | 1 | |
| R4125 | ERJ3GEY0R00 | M.RESISTOR CH 1/16W 0 | 1 | |
| R4131-34 | ERJ3GEY0R00 | M.RESISTOR CH 1/16W 0 | 4 | |
| | | | | |
| TH4101 | D4CC11030012 | THERMISTOR | 1 | |
| | | | | |
| | | | | |
| | | | | |
| | | | | |
| | | | | |
| ■ E7 | VEP01957A | DC IN C.B.A. | 1 | (RTL) |
| | | | | |
| | | | | |
| | | MISCELLANEOUS | | |
| | | | | |
| | VJS3381 | CONNECTOR (FEMALE) | 1 | K2EC2B000001 |
| | | | | |
| | | | | |
| | | | | |
| | | | | |
| | | | | |
| ■ E8 | VEP01953A | BATTERY C.B.A. | 1 | (RTL) |
| | | | | |
| | | | | |
| | | | | |
| | | | | |

Components identified with the mark ⚠ have special characteristics for safety.
When replacing any of these component, use only the same type.

| Ref.No. | Part No. | Part Name & Description | Pcs | Remarks |
|---|---|---|---|---|
| P1 | K1KA03B00102 | CONNECTOR (MALE) | 1 | |
| R1 | ERJ3GEY0R00 | M.RESISTOR CH 1/16W 0 | 1 | |
| ■ E9 | VEP06F66A | ZOOM FPC C.B.A. | 1 | (RTL) |
| SW201 | EVQQW101M | SWITCH | 1 | |
| VR201 | D2B1B15B0001 | V.RESISTOR 100K | 1 | |
| ■ E10 | VEP001E3A | ZOOM CON C.B.A. | 1 | (RTL) |
| D1 | MA142K | DIODE | 1 | |
| P1 | K1MN06B00077 | CONNECTOR | 1 | |
| P2 | K1MN10B00052 | CONNECTOR | 1 | |
| ■ E11 | VEP001E5A | CAS OPEN C.B.A. | 1 | (RTL) |
| SW501 | K0L1BB000022 | SWITCH | 1 | |
| | | MISCELLANEOUS | | |
| | VEE0Z34 | CAS OPEN HARNESS | 1 | |
| ■ E12 | VEP04863A | REAR JACK C.B.A. | 1 | (RTL) |
| J4301 | VJJ0182 | SYNC EDIT JACK | 1 | K2HB103B0015 |
| J4302 | K2YZ04000016 | PLUG AND JACK | 1 | |
| J4303 | K2HC106B0010 | AC POWER PLUG | 1 | |
| L4301,02 | VLF1315A102 | FILTER | 2 | J0JHC0000015 |
| L4304,05 | J0MAB0000110 | FILTER | 2 | |
| L4306 | VLF1394 | FILTER | 1 | J0MAB0000077 |
| P4301 | K1MN10B00052 | CONNECTOR | 1 | |
| P4302 | VJS3801D024 | CONNECTOR (FEMALE) | 1 | |
| R4301,02 | ERJ3GEY0R00 | M.RESISTOR CH 1/16W 0 | 2 | |
| R4304,05 | ERJ3GEY0R00 | M.RESISTOR CH 1/16W 0 | 2 | |
| R4309 | ERJ3GEY0R00 | M.RESISTOR CH 1/16W 0 | 1 | |
| R4311 | ERJ3GEY0R00 | M.RESISTOR CH 1/16W 0 | 1 | |
| | | MISCELLANEOUS | | |
| | VMP8003 | REAR P.C.B.FIX ANGLE | 1 | |
| | XQN16+B4FN | SCREW | 2 | |
| ■ E13 | VEP001E8A | R-SIDE FPC C.B.A. | 1 | (RTL) |

| Ref.No. | Part No. | Part Name & Description | Pcs | Remarks |
|---|---|---|---|---|
| P1 | K1KA60A00148 | CONNECTOR (MALE) | 1 | |
| ■ E14 | VEP06F68A | R-SIDE C.B.A. | 1 | (RTL) |
| B6401 | VSB0407 | BATTERY | 1 | |
| C6402-06 | F1L1E1060018 | C.CAPACITOR CH 25V 10U | 5 | |
| D6401 | B0JDAD000001 | DIODE | 1 | |
| D6402 | MA3S781D0L | DIODE | 1 | |
| D6403,04 | B0JDAD000001 | DIODE | 2 | |
| D6405,06 | MA3S781D0L | DIODE | 2 | |
| D6407 | B0JDAD000001 | DIODE | 1 | |
| P6401 | VJP3172D002 | CONNECTOR (MALE) | 1 | K1KA02B00051 |
| P6402 | VJS3791D016 | CONNECTOR (FEMALE) | 1 | |
| P6403 | K1MN61B00001 | CONNECTOR | 1 | |
| P6404 | K1MN27B00053 | CONNECTOR | 1 | |
| P6405 | K1KA02B00053 | CONNECTOR (MALE) | 1 | |
| R6401 | ERJ3GEYJ331 | M.RESISTOR CH 1/16W 330 | 1 | |
| SW6401-05 | EVQPLPA08 | SWITCH | 5 | |
| SW6406-13 | K0H1BA000442 | SWITCH | 8 | |
| SW6414 | K0D112B00055 | SWITCH | 1 | |
| ■ E15 | VEP06F64A | CAMERA OP C.B.A. | 1 | (RTL) |
| P6001 | VJS3791D016 | CONNECTOR (FEMALE) | 1 | |
| P6002 | K1MN06B00013 | CONNECTOR | 1 | |
| SW6001-05 | EVQPLPA08 | SWITCH | 5 | |
| ■ E16 | VEP001E1A | LCD OPEN C.B.A. | 1 | (RTL) |
| SW101 | K0L1BA000015 | SWITCH | 1 | |
| | | MISCELLANEOUS | | |
| | VEE0Z35 | LCD OPEN HARNESS | 1 | |
| | VMP8017 | LCD SW ANGLE | 1 | |
| | XQN16+B3FN | SCREW | 1 | |
| ■ E17 | VEP001E4A | TALLY C.B.A. | 1 | (RTL) |
| D401 | B3AAB0000129 | LED | 1 | |
| R401 | ERJ3GEYJ181 | M.RESISTOR CH 1/16W 180 | 1 | |
| ■ E18 | VEP001E0A | EVF CON C.B.A. | 1 | (RTL) |

Components identified with the mark ⚠ have special characteristics for safety.
When replacing any of these component, use only the same type.

| Ref.No. | Part No. | Part Name & Description | Pcs | Remarks |
|---|---|---|---|---|
| P1 | K1MN18B00048 | CONNECTOR | 1 | |
| P2 | K1MN07B00070 | CONNECTOR | 1 | |
| P3 | K1MN31B00015 | CONNECTOR | 1 | |
| ■ E19 | VEP04828A | MIC U C.B.A. | 1 | (RTL) |
| C4801-04 | F1G1C223A004 | C.CAPACITOR CH 16V 0.022U | 4 | |
| C4806 | ECJ0EB1E102K | C.CAPACITOR CH 25V 1000P | 1 | |
| C4808 | ECJ0EB1E102K | C.CAPACITOR CH 25V 1000P | 1 | |
| C4809 | F1G1C223A004 | C.CAPACITOR CH 16V 0.022U | 1 | |
| C4810 | ECUX1A224KBV | C.CAPACITOR CH 10V 0.22U | 1 | |
| C4811 | F1G1C223A004 | C.CAPACITOR CH 16V 0.022U | 1 | |
| C4812 | ECUX1A224KBV | C.CAPACITOR CH 10V 0.22U | 1 | |
| C4813 | F3E0J106A005 | T.CAPACITOR CH6.3V 10U | 1 | |
| C4814 | ECST0JY226 | T.CAPACITOR CH6.3V 22U | 1 | |
| FP4801 | K1MN07B00072 | CONNECTOR | 1 | |
| IC4801 | C0ABCB000051 | IC | 1 | |
| M4801-04 | WM-61B102A | ECM | 4 | |
| Q4801 | 2SD2216J | TRANSISTOR | 1 | |
| R4801-04 | ERJ6GEYG392 | M.RESISTOR CH 1/10W 3.9K | 4 | |
| R4805-12 | ERJ2GEJ273 | M.RESISTOR CH 1/16W 27K | 8 | |
| R4813 | ERJ2GEJ223 | M.RESISTOR CH 1/16W 22K | 1 | |
| R4814 | ERJ2GEJ333 | M.RESISTOR CH 1/16W 33K | 1 | |
| R4815 | ERJ2GEJ472 | M.RESISTOR CH 1/16W 4.7K | 1 | |
| | | MISCELLANEOUS | | |
| | VMT1249 | MIC DUNPER | 1 | |
| ■ E20 | VEP28272B | EVF A C.B.A. | 1 | (RTL) |
| REF1 | K1MN16B00039 | CONNECTOR | 1 | |
| REF2 | K1MN19B00029 | CONNECTOR | 1 | |
| ■ E21 | VEP28275B | EVF B C.B.A. | 1 | (RTL) |
| REF1 | A2CD00000030 | TRANSISTOR | 1 | |
| REF2 | B1DFCL000006 | TRANSISTOR | 1 | |
| REF3 | ETJ11K90AM | TRANSFORMER | 1 | |
| REF4 | F1L1A2260013 | C.CAPACITOR CH 10V 22U | 1 | |
| REF5 | G1C100KA0005 | COIL 10UH | 1 | |
| ■ E22 | VEP001G2A | MENU FPC C.B.A. | 1 | (RTL) |
| SW1 | EVQPLPA08 | SWITCH | 1 | |
| VR1 | K9AA01500005 | SWITCH | 1 | |
| | | MISCELLANEOUS | | |

| Ref.No. | Part No. | Part Name & Description | Pcs | Remarks |
|---|---|---|---|---|
| | VMP8020 | CAM OP ANGLE | 1 | |
| | XQN16+B3FN | SCREW | 2 | |
| ■ E23 | VEP26257B | MONITOR C.B.A. | 1 | (RTL) |
| ■ | VEP06E80A | HALL SENSOR FLEX C.B.A. | 1 | (RTL)FOR VEP26257B |
| C901 | ECJ0EB1A104K | C.CAPACITOR CH 10V 0.1U | 1 | |
| C902 | F3F0G476A009 | T.CAPACITOR CH 4V 47U | 1 | |
| C903 | F3F0J226A007 | T.CAPACITOR CH6.3V 22U | 1 | |
| C905,06 | ECJ4YB1C106V | C.CAPACITOR CH 16V 10U | 2 | |
| C907 | F3F0J335A008 | T.CAPACITOR CH6.3V 3.3U | 1 | |
| C908,09 | ECJ0WB1C103K | C.CAPACITOR CH 16V 0.01U | 2 | |
| C910-13 | F1H0J474A002 | C.CAPACITOR CH6.3V 0.47U | 4 | |
| C914 | ECJ0EB1A104K | C.CAPACITOR CH 10V 0.1U | 1 | |
| C915 | ECJ1ZB1C104K | C.CAPACITOR CH 16V 0.1U | 1 | |
| C916-19 | ECJ0WB1C103K | C.CAPACITOR CH 16V 0.01U | 4 | |
| C923 | ECJ1VC1H471G | C.CAPACITOR CH 50V 470P | 1 | |
| C925 | ECST1AY106Z | T.CAPACITOR CH 10V 10U | 1 | |
| C930 | ECJ0EB1A104K | C.CAPACITOR CH 10V 0.1U | 1 | |
| C931 | ECJ0EC1H330J | C.CAPACITOR CH 50V 33P | 1 | |
| C932 | ECJ0EC1H221J | C.CAPACITOR CH 50V 220P | 1 | |
| C933 | ECJ2YB1C474K | C.CAPACITOR CH 16V 0.47U | 1 | |
| C934 | ECJ0WB1C103K | C.CAPACITOR CH 16V 0.01U | 1 | |
| C935 | ECJ0EB1C682K | C.CAPACITOR CH 16V 6800P | 1 | |
| C936,37 | ECJ0EB1A104K | C.CAPACITOR CH 10V 0.1U | 2 | |
| C938 | ECJ0EC1H101J | C.CAPACITOR CH 50V 100P | 1 | |
| C939 | ECJ1VC1H331G | C.CAPACITOR CH 50V 330P | 1 | |
| C940 | ECJ0EC1H560J | C.CAPACITOR CH 50V 56P | 1 | |
| C941 | F1G1H100A448 | C.CAPACITOR CH 50V 10P | 1 | |
| C942 | ECJ2YB1A105K | C.CAPACITOR CH 10V 1U | 1 | |
| C943,44 | ECJ1VB1A224K | T.CAPACITOR CH 10V 0.22U | 2 | |
| C945 | ECJ0EB1E332K | C.CAPACITOR CH 25V 3300P | 1 | |
| C946 | ECJ4YB1C106V | C.CAPACITOR CH 16V 10U | 1 | |
| C947,48 | ECJ1ZB1C104K | C.CAPACITOR CH 16V 0.1U | 2 | |
| C949 | ECJ0WB1C103K | C.CAPACITOR CH 16V 0.01U | 1 | |
| C950 | F1J1C105A091 | C.CAPACITOR CH 16V 1U | 1 | |
| C952 | ECJ1ZB1C104K | C.CAPACITOR CH 16V 0.1U | 1 | |
| D901 | MA338 | DIODE | 1 | MA2X338 |
| D902 | MA6Z12100L | DIODE | 1 | |
| D903 | MA3S132D0L | DIODE | 1 | |
| D904 | MA4X159A0L | DIODE | 1 | |
| D905,06 | B0JCEE000002 | DIODE | 2 | |
| D907 | MA111 | DIODE | 1 | |
| D908 | MAZ80270LL | DIODE | 1 | |
| D909 | MA8043-M | DIODE | 1 | |
| D910 | B0BC6R100014 | DIODE | 1 | |
| FP901 | K1MN24B00068 | CONNECTOR | 1 | |
| FP903 | K1MN25B00035 | CONNECTOR | 1 | |
| IC901 | C0HBA0000071 | IC | 1 | |
| IC903 | C0JBAB000350 | IC | 1 | |
| IC904 | C0JBAB000391 | IC | 1 | |
| IC905 | SN74LV04APW | IC | 1 | C0JBAB000247 |
| IC991 | DN8797MSC | IC | 1 | FOR VEP26257B |
| L901-04 | VLQ0807K100 | COIL 10UH | 4 | G1C100K00024 |
| L905 | G1C100MA0031 | COIL 10UH | 1 | |
| L907 | VLQ0426J3R3 | COIL 3.3UH | 1 | G1C3R3J00009 |
| Q901 | B1ADCF000059 | TRANSISTOR | 1 | |
| Q902 | B1CFNG000001 | TRANSISTOR | 1 | |
| Q903 | XP0460100L | TRANSISTOR | 1 | |
| Q904 | XP1501 | TRANSISTOR-RESISTOR | 1 | |
| Q905 | B1ACGD000006 | TRANSISTOR | 1 | |
| Q906-08 | XP0460100L | TRANSISTOR | 3 | |
| QR901,02 | B1GBCFNA0014 | TRANSISTOR | 2 | |

Components identified with the mark ⚠ have special characteristics for safety.
When replacing any of these component, use only the same type.

| Ref.No. | Part No. | Part Name & Description | Pcs | Remarks |
|---|---|---|---|---|
| QR903 | B1GBCFJN0017 | TRANSISTOR | 1 | |
| QR904 | UNR9214J0L | TRANSISTOR | 1 | |
| | | | | |
| R901-03 | ERJ2GEJ821 | M.RESISTOR CH 1/16W 820 | 3 | |
| R904 | ERJ2RHD333 | M.RESISTOR CH 1/16W 33K | 1 | |
| R905 | ERJ2RHD153 | M.RESISTOR CH 1/16W 15K | 1 | |
| R906 | ERJ2GEJ333 | M.RESISTOR CH 1/16W 33K | 1 | |
| R907-09 | ERJ2GEJ102 | M.RESISTOR CH 1/16W 1K | 3 | |
| R910,11 | ERJ2GEJ332 | M.RESISTOR CH 1/16W 3.3K | 2 | |
| R912-14 | ERJ2GEJ101 | M.RESISTOR CH 1/16W 100 | 3 | |
| R918 | ERJ2GEJ102 | M.RESISTOR CH 1/16W 1K | 1 | |
| R919 | ERJ2GEJ103 | M.RESISTOR CH 1/16W 10K | 1 | |
| R920 | ERJ2GEJ332 | M.RESISTOR CH 1/16W 3.3K | 1 | |
| R921 | ERJ2GEJ473 | M.RESISTOR CH 1/16W 47K | 1 | |
| R922 | ERJ2GEJ272 | M.RESISTOR CH 1/16W 2.7K | 1 | |
| R923 | ERJ2GEJ103 | M.RESISTOR CH 1/16W 10K | 1 | |
| R924 | ERJ2GEJ102 | M.RESISTOR CH 1/16W 1K | 1 | |
| R925 | ERJ2RHD104 | M.RESISTOR CH 1/16W 100K | 1 | |
| R926 | ERJ2GEJ332 | M.RESISTOR CH 1/16W 3.3K | 1 | |
| R927 | ERJ2GEJ124 | M.RESISTOR CH 1/16W 120K | 1 | |
| R928 | ERJ2GEJ473 | M.RESISTOR CH 1/16W 47K | 1 | |
| R929 | ERJ2RHD273 | M.RESISTOR CH 1/16W 27K | 1 | |
| R930,31 | ERJ2GEJ103 | M.RESISTOR CH 1/16W 10K | 2 | |
| R932 | ERJ2GEJ102 | M.RESISTOR CH 1/16W 1K | 1 | |
| R933 | ERJ2GEJ333 | M.RESISTOR CH 1/16W 33K | 1 | |
| R934 | ERJ2RHD272 | M.RESISTOR CH 1/16W 2.7K | 1 | |
| R935 | ERJ2RHD273 | M.RESISTOR CH 1/16W 27K | 1 | |
| R936 | ERJ2GEJ102 | M.RESISTOR CH 1/16W 1K | 1 | |
| R937 | ERJ2GEJ182 | M.RESISTOR CH 1/16W 1.8K | 1 | |
| R938 | ERJ2GEJ104 | M.RESISTOR CH 1/16W 100K | 1 | |
| R940 | ERJ2GEJ153 | M.RESISTOR CH 1/16W 15K | 1 | |
| R941-43 | ERJ2GEJ103 | M.RESISTOR CH 1/16W 10K | 3 | |
| R944 | ERJ2GEJ394 | M.RESISTOR CH 1/16W 390K | 1 | |
| R945 | ERJ2RHD273 | M.RESISTOR CH 1/16W 27K | 1 | |
| R946 | ERJ2RHD823 | M.RESISTOR CH 1/16W 82K | 1 | |
| R947 | ERJ2RHD393 | M.RESISTOR CH 1/16W 39K | 1 | |
| R951 | ERJ2GEJ560 | M.RESISTOR CH 1/16W 56 | 1 | |
| R952 | ERJ2GEJ472 | M.RESISTOR CH 1/16W 4.7K | 1 | |
| R953 | ERJ3GEYJ823 | M.RESISTOR CH 1/16W 82K | 1 | |
| R954 | ERJ3GEY0R00 | M.RESISTOR CH 1/16W 0 | 1 | |
| R955 | ERJ3RBD333 | M.RESISTOR CH 1/16W 33K | 1 | |
| R956 | ERJ3RBD103 | M.RESISTOR CH 1/16W 10K | 1 | |
| R957 | ERJ3RBD101 | M.RESISTOR CH 1/16W 100 | 1 | |
| R958 | ERJ2GEJ153 | M.RESISTOR CH 1/16W 15K | 1 | |
| R959 | ERJ2GEJ272 | M.RESISTOR CH 1/16W 2.7K | 1 | |
| R960 | ERJ2GEJ223 | M.RESISTOR CH 1/16W 22K | 1 | |
| R961 | ERJ2GEJ153 | M.RESISTOR CH 1/16W 15K | 1 | |
| R962 | ERJ2GEJ561 | M.RESISTOR CH 1/16W 560 | 1 | |
| R963 | ERJ2GEJ104 | M.RESISTOR CH 1/16W 100K | 1 | |
| R964 | ERJ2GEJ333 | M.RESISTOR CH 1/16W 33K | 1 | |
| R965,66 | ERJ2GEJ563 | M.RESISTOR CH 1/16W 56K | 2 | |
| R967 | ERJ2GEJ104 | M.RESISTOR CH 1/16W 100K | 1 | |
| R968,69 | ERJ2GEJ333 | M.RESISTOR CH 1/16W 33K | 2 | |
| R970 | ERJ2GEJ562 | M.RESISTOR CH 1/16W 5.6K | 1 | |
| R971 | ERJ3GEYJ335 | M.RESISTOR CH 1/16W 3.3M | 1 | |
| R972 | ERJ2GEJ224 | M.RESISTOR CH 1/16W 220K | 1 | |
| R973,74 | ERJ8GEYJ335 | M.RESISTOR CH 1/8W 3.3M | 2 | |
| R975 | ERJ2GEJ223 | M.RESISTOR CH 1/16W 22K | 1 | |
| R976 | ERJ3RBD681 | M.RESISTOR CH 1/16W 680 | 1 | |
| R977 | ERJ3RED220 | M.RESISTOR CH 1/16W 22 | 1 | |
| R978 | ERJ6GEYJ335 | M.RESISTOR CH 1/10W 3.3M | 1 | |
| R979 | ERJ3GEYJ224 | M.RESISTOR CH 1/16W 220K | 1 | |
| R985,86 | ERJ2GEJ182 | M.RESISTOR CH 1/16W 1.8K | 2 | |
| R989 | ERJ2GEJ104 | M.RESISTOR CH 1/16W 100K | 1 | |
| | | | | |
| T901 | ETJ09K44AZ | TRANSFORMER | 1 | |
| T902 | EFTU21R203 | TRANSFORMER | 1 | |
| | | | | |
| W901 | ERJ3GEY0R00 | M.RESISTOR CH 1/16W 0 | 1 | |
| W902 | ERJ2GE0R00 | M.RESISTOR CH 1/16W 0 | 1 | |

# AG-MYA30G

| Ref.No. | Part No. | Part Name & Description | Pcs | Remarks |
|---|---|---|---|---|
| | | | | |
| ■ E1 | VEP04875A | MAIN C.B.A. | 1 | (RTL) |
| | | | | |
| ■ E2 | VEP01956A | POWER C.B.A. | 1 | (RTL) |
| | | | | |
| ■ E3 | VEP04869A | XLR C.B.A. | 1 | (RTL) |
| | | | | |
| ■ E4 | VEP04870A | SW C.B.A. | 1 | (RTL) |
| | | | | |
| ■ E5 | VEP04871A | VR C.B.A. | 1 | (RTL) |
| | | | | |
| | | | | |
| | | | | |
| | | | | |
| | | | | |
| | | | | |
| | | | | |
| | | | | |
| | | | | |
| ■ E1 | VEP04875A | MAIN C.B.A. | 1 | (RTL) |
| | | | | |
| | | | | |
| C401,02 | ECJ1VF1E104Z | C.CAPACITOR CH 25V 0.1U | 2 | |
| C403-06 | ECJ1VC1H330J | C.CAPACITOR CH 50V 33P | 4 | |
| C407,08 | F3H1D2260003 | T.CAPACITOR CH 20V 22U | 2 | |
| C409,10 | ECJ1VC1H330J | C.CAPACITOR CH 50V 33P | 2 | |
| C411-13 | F3H1D2260003 | T.CAPACITOR CH 20V 22U | 3 | |
| C414-16 | ECJ1VF1E104Z | C.CAPACITOR CH 25V 0.1U | 3 | |
| C451 | ECJ1VF1E104Z | C.CAPACITOR CH 25V 0.1U | 1 | |
| C452-54 | F3H1D2260003 | T.CAPACITOR CH 20V 22U | 3 | |
| C455 | ECJ1VF1E104Z | C.CAPACITOR CH 25V 0.1U | 1 | |
| C456,57 | F3H1D2260003 | T.CAPACITOR CH 20V 22U | 2 | |
| C458 | ECUX1C106KBP | C.CAPACITOR CH 16V 10U | 1 | |
| C459,60 | ECJ1VF1E104Z | C.CAPACITOR CH 25V 0.1U | 2 | |
| C461 | F3H1D2260003 | T.CAPACITOR CH 20V 22U | 1 | |
| | | | | |
| D401-04 | MA3J14300L | DIODE | 4 | |
| D451 | MA142K | DIODE | 1 | |
| | | | | |
| IC401,02 | NJM2122M | IC | 2 | |
| IC403,04 | TA75W558FU | IC | 2 | C0ABBA000042 |
| IC405,06 | TC7W53FU | IC | 2 | |
| IC451 | TC7W53FU | IC | 1 | |
| IC452 | TA75W558FU | IC | 1 | C0ABBA000042 |
| IC453 | AN77L09M | IC | 1 | |
| | | | | |
| P451 | K1ZZ00001280 | CONNECTOR | 1 | |
| P452 | VJS3846A030 | CONNECTOR (FEMALE) | 1 | |
| P453 | K1KA08A00434 | CONNECTOR (MALE) | 1 | |
| P454 | K1ZZ00001280 | CONNECTOR | 1 | |
| | | | | |
| Q401 | 2SD1819A-R | TRANSISTOR | 1 | |
| Q451 | 2SD1819A-R | TRANSISTOR | 1 | |
| | | | | |
| QR401,02 | UNR521300L | TRANSISTOR | 2 | |
| QR403,04 | UNR511300L | TRANSISTOR | 2 | |
| QR405,06 | UNR521300L | TRANSISTOR | 2 | |
| | | | | |
| R401,02 | ERJ3RBD393 | M.RESISTOR CH 1/16W 39K | 2 | |
| R403 | ERJ3RBD221 | M.RESISTOR CH 1/16W 220 | 1 | |
| R405 | ERJ3RBD221 | M.RESISTOR CH 1/16W 220 | 1 | |
| R407-18 | ERJ3RBD472 | M.RESISTOR CH 1/16W 4.7K | 12 | |
| R419 | ERJ3GEYJ333 | M.RESISTOR CH 1/16W 33K | 1 | |
| R420 | ERJ3GEYJ473 | M.RESISTOR CH 1/16W 47K | 1 | |
| R421 | ERJ3GEYJ103 | M.RESISTOR CH 1/16W 10K | 1 | D0GB103JA002 |
| R422,23 | ERJ3RBD473 | M.RESISTOR CH 1/16W 47K | 2 | |
| R424,25 | ERJ3RBD223 | M.RESISTOR CH 1/16W 22K | 2 | |
| R426,27 | ERJ3GEYJ563 | M.RESISTOR CH 1/16W 56K | 2 | |
| R451-53 | ERJ3GEYJ563 | M.RESISTOR CH 1/16W 56K | 3 | |
| R454 | ERJ3GEYJ333 | M.RESISTOR CH 1/16W 33K | 1 | |
| R455 | ERJ3GEYJ473 | M.RESISTOR CH 1/16W 47K | 1 | |
| R456 | ERJ3GEYJ103 | M.RESISTOR CH 1/16W 10K | 1 | D0GB103JA002 |
| R457,58 | ERJ3GEYJ104 | M.RESISTOR CH 1/16W 100K | 2 | |
| R459,60 | ERJ8GEY0R00 | M.RESISTOR CH 1/8W 0 | 2 | |
| | | | | |
| | | | | |

| Ref.No. | Part No. | Part Name & Description | Pcs | Remarks |
|---|---|---|---|---|
| R463-65 | ERJ3GEY0R00 | M.RESISTOR CH 1/16W 0 | 3 | |
| | | | | |
| | | | | |
| | | | | |
| | | | | |
| | | | | |
| ■ E2 | VEP01956A | POWER C.B.A. | 1 | (RTL) |
| | | | | |
| | | | | |
| C1801 | F1H1H104A783 | C.CAPACITOR CH 50V 0.1U | 1 | |
| C1802 | ECUX1A105KBV | C.CAPACITOR CH 10V 1U | 1 | |
| C1803,04 | VCK0303K225 | C.CAPACITOR 2.2U | 2 | |
| C1806 | ECUX1A105KBV | C.CAPACITOR CH 10V 1U | 1 | |
| C1809 | ECUX1H222KBV | C.CAPACITOR CH 50V 2200P | 1 | |
| C1811 | ECUX1C473KBV | C.CAPACITOR CH 16V 0.047U | 1 | |
| C1812 | ECUX1H221JCV | C.CAPACITOR CH 50V 220P | 1 | |
| C1813 | ECUX1H472KBV | C.CAPACITOR CH 50V 4700P | 1 | |
| C1815 | ECUX1H471KBV | C.CAPACITOR CH 50V 470P | 1 | |
| C1816 | ECUX1H682KBV | C.CAPACITOR CH 50V 6800P | 1 | |
| C1818 | ECUX1A224KBV | C.CAPACITOR CH 10V 0.22U | 1 | |
| C1819-24 | VCK0303K225 | C.CAPACITOR 2.2U | 6 | |
| C1825 | F1H1C105A095 | C.CAPACITOR CH 16V 1U | 1 | |
| C1826 | ECUX1H331JCV | C.CAPACITOR CH 50V 330P | 1 | |
| C1827 | ECUX1H102KBV | C.CAPACITOR CH 50V 1000P | 1 | F1H1H102A009 |
| C1828 | F1L2A1050004 | C.CAPACITOR CH100V 0.2U | 1 | |
| C1829 | F1H1C105A095 | C.CAPACITOR CH 16V 1U | 1 | |
| C1830 | F1L2A1050004 | C.CAPACITOR CH100V 0.2U | 1 | |
| C1831 | F1H1C105A095 | C.CAPACITOR CH 16V 1U | 1 | |
| C1832 | F1L2A1050004 | C.CAPACITOR CH100V 0.2U | 1 | |
| C1833 | F1H1C105A095 | C.CAPACITOR CH 16V 1U | 1 | |
| | | | | |
| D1803 | MA111 | DIODE | 1 | |
| D1805 | MA2S11100L | DIODE | 1 | |
| D1807 | MA2S11100L | DIODE | 1 | |
| D1808 | U1GU44 | DIODE | 1 | |
| D1809 | MA3J70000L | DIODE | 1 | |
| D1811 | MA3S132E0L | DIODE | 1 | |
| D1812 | MA8120-M | DIODE | 1 | |
| D1813,14 | MAZ82700ML | DIODE | 2 | |
| | | | | |
| IC1802 | BA9743AFV | IC | 1 | C0DBAZC00010 |
| | | | | |
| L1801,02 | J0JBC0000019 | FILTER | 2 | |
| L1803 | G1C100K00016 | COIL 10UH | 1 | |
| L1804 | VLQ0319K100 | COIL 10UH | 1 | G1C100K00023 |
| L1805 | G1C331M00006 | COIL 330UH | 1 | |
| L1806,07 | G1C100K00019 | COIL 10UH | 2 | |
| | | | | |
| P1801 | K1ZZ00001279 | CONNECTOR | 1 | |
| P1802 | K1KA02A00079 | CONNECTOR (MALE) | 1 | |
| | | | | |
| Q1801 | B1ADCF000059 | TRANSISTOR | 1 | |
| Q1803 | B1DHCC000029 | TRANSISTOR | 1 | |
| Q1805 | XP0460100L | TRANSISTOR | 1 | |
| Q1806 | 2SJ278 | TRANSISTOR | 1 | |
| Q1807 | XP0460100L | TRANSISTOR | 1 | |
| Q1808 | 2SD1328-R | TRANSISTOR | 1 | |
| | | | | |
| QR1801 | UNR9214J0L | TRANSISTOR | 1 | |
| QR1802 | UNR9113J0L | TRANSISTOR | 1 | |
| QR1803 | UN9112J | TRANSISTOR | 1 | |
| QR1804,05 | UN9213 | TRANSISTOR-RESISTOR | 2 | |
| QR1806,07 | UNR9113J0L | TRANSISTOR | 2 | |
| | | | | |
| R1801 | ERJ3GEYJ103 | M.RESISTOR CH 1/16W 10K | 1 | D0GB103JA002 |
| R1802 | ERJ3GEYJ473 | M.RESISTOR CH 1/16W 47K | 1 | |
| R1803 | ERJ3GEYG472 | M.RESISTOR CH 1/16W 4.7K | 1 | |
| R1804 | ERJ3GEY0R00 | M.RESISTOR CH 1/16W 0 | 1 | |
| R1806 | ERJ3RHD243 | M.RESISTOR CH 1/16W 24K | 1 | |
| R1807 | ERJ3RHD393 | M.RESISTOR CH 1/16W 39K | 1 | |
| R1808,09 | ERJ3RHD333 | M.RESISTOR CH 1/16W 33K | 2 | |
| R1810 | ERJ6GEY0R00 | M.RESISTOR CH 1/10W 0 | 1 | D0YDR0000005 |
| R1812 | ERJ3RHD683 | M.RESISTOR CH 1/16W 68K | 1 | |
| R1813 | ERJ3GEYJ124 | M.RESISTOR CH 1/16W 120K | 1 | |
| R1816,17 | ERJ3RHD333 | M.RESISTOR CH 1/16W 33K | 2 | |
| | | | | |
| | | | | |

Components identified with the mark ⚠ have special characteristics for safety.
When replacing any of these component, use only the same type.

| Ref.No. | Part No. | Part Name & Description | Pcs | Remarks |
|---|---|---|---|---|
| R1818 | ERJ3RHD223 | M.RESISTOR CH 1/16W 22K | 1 | |
| R1819 | ERJ3RHD272 | M.RESISTOR CH 1/16W 2.7K | 1 | |
| R1820 | ERJ3RHD271 | M.RESISTOR CH 1/16W 270 | 1 | |
| R1826 | ERJ3GEY0R00 | M.RESISTOR CH 1/16W 0 | 1 | |
| R1827 | ERJ3RHD104 | M.RESISTOR CH 1/16W 100K | 1 | |
| R1828 | ERJ3GEYJ470 | M.RESISTOR CH 1/16W 47 | 1 | |
| R1829 | ERJ3RHD272 | M.RESISTOR CH 1/16W 2.7K | 1 | |
| R1830 | ERJ3RBD183 | M.RESISTOR CH 1/16W 18K | 1 | |
| R1831 | ERJ3GEYJ223 | M.RESISTOR CH 1/16W 22K | 1 | |
| R1832 | ERJ3GEYJ273 | M.RESISTOR CH 1/16W 27K | 1 | |
| R1833 | ERJ3GEYJ563 | M.RESISTOR CH 1/16W 56K | 1 | |
| R1837 | ERJ3GEYJ473 | M.RESISTOR CH 1/16W 47K | 1 | |
| R1838 | ERJ3GEYJ153 | M.RESISTOR CH 1/16W 15K | 1 | |
| R1841 | ERJ3GEYG472 | M.RESISTOR CH 1/16W 4.7K | 1 | |
| R1842 | ERJ3GEYJ392 | M.RESISTOR CH 1/16W 3.9K | 1 | |
| R1843 | ERJ3GEYJ333 | M.RESISTOR CH 1/16W 33K | 1 | |
| R1844 | ERJ3GEYJ223 | M.RESISTOR CH 1/16W 22K | 1 | |
| R1845 | ERJ3GEYJ560 | M.RESISTOR CH 1/16W 56 | 1 | |
| R1846 | ERJ3GEYJ104 | M.RESISTOR CH 1/16W 100K | 1 | |
| R1847 | ERJ3GEYJ392 | M.RESISTOR CH 1/16W 3.9K | 1 | |
| R1849,50 | ERJ3GEYG102 | M.RESISTOR CH 1/16W 1K | 2 | |
| R1851,52 | ERJ3GEY0R00 | M.RESISTOR CH 1/16W 0 | 2 | |
| R1854 | ERJ3GEYJ153 | M.RESISTOR CH 1/16W 15K | 1 | |
| R1856 | ERJ3GEY0R00 | M.RESISTOR CH 1/16W 0 | 1 | |
| | | | | |
| T1801 | G5DYA0000051 | TRANSFORMER | 1 | |
| | | | | |
| | | | | |
| | | | | |
| | | | | |
| ■ E3 | VEP04869A | XLR C.B.A. | 1 | (RTL) |
| | | | | |
| | | | | |
| C301,02 | ECUX1H471JCV | C.CAPACITOR CH 50V 470P | 2 | |
| C303 | ECUX1H103ZFV | C.CAPACITOR CH 50V 0.01U | 1 | |
| C304,05 | EEVHP1H4R7 | E.CAPACITOR 50V 4.7U | 2 | |
| C306 | ECUM1H104KBM | C.CAPACITOR CH 50V 0.1U | 1 | |
| C310 | EEVHB1H3R3 | E.CAPACITOR 50V 3.3U | 1 | |
| C351,52 | ECUX1H471JCV | C.CAPACITOR CH 50V 470P | 2 | |
| C353 | ECUX1H103ZFV | C.CAPACITOR CH 50V 0.01U | 1 | |
| C354,55 | EEVHP1H4R7 | E.CAPACITOR 50V 4.7U | 2 | |
| C356 | ECUM1H104KBM | C.CAPACITOR CH 50V 0.1U | 1 | |
| | | | | |
| J301 | K1AB103A0007 | CONNECTOR (MALE) | 1 | |
| J351 | K1AB103A0007 | CONNECTOR (MALE) | 1 | |
| | | | | |
| L301,02 | VLQ0163J100 | COIL 10UH | 2 | G1C100J00001 |
| L303 | VLF1315A102 | FILTER | 1 | J0JHC0000015 |
| L305 | VLF1315A102 | FILTER | 1 | J0JHC0000015 |
| L307 | VLF1315A102 | FILTER | 1 | J0JHC0000015 |
| L351,52 | VLQ0163J100 | COIL 10UH | 2 | G1C100J00001 |
| L353 | VLF1315A102 | FILTER | 1 | J0JHC0000015 |
| L355 | VLF1315A102 | FILTER | 1 | J0JHC0000015 |
| L357 | VLF1315A102 | FILTER | 1 | J0JHC0000015 |
| | | | | |
| P301 | VJS3826A013 | CONNECTOR (FEMALE) | 1 | |
| P302 | K1KA02A00079 | CONNECTOR (MALE) | 1 | |
| P351 | VJS3826A013 | CONNECTOR (FEMALE) | 1 | |
| | | | | |
| Q301 | 2SB1220-R | TRANSISTOR | 1 | |
| Q302 | 2SD1824 | TRANSISTOR | 1 | |
| Q351 | 2SB1220-R | TRANSISTOR | 1 | |
| | | | | |
| QR301 | UNR521300L | TRANSISTOR | 1 | |
| QR351 | UNR521300L | TRANSISTOR | 1 | |
| | | | | |
| R303 | ERJ3GEY0R00 | M.RESISTOR CH 1/16W 0 | 1 | |
| R304 | ERJ3GEYJ104 | M.RESISTOR CH 1/16W 100K | 1 | |
| R305,06 | ERJ12YJ682 | M.RESISTOR CH 1/2W 6.8K | 2 | |
| R307 | ERJ3GEYJ104 | M.RESISTOR CH 1/16W 100K | 1 | |
| R308 | ERJ3GEYJ334 | M.RESISTOR CH 1/16W 330K | 1 | |
| R309,10 | ERJ3GEYJ104 | M.RESISTOR CH 1/16W 100K | 2 | |
| R311,12 | ERJ3RBD273 | M.RESISTOR CH 1/16W 27K | 2 | |
| R313,14 | ERJ3RBD132 | M.RESISTOR CH 1/16W 1.3K | 2 | |
| | | | | |
| | | | | |

| Ref.No. | Part No. | Part Name & Description | Pcs | Remarks |
|---|---|---|---|---|
| R315 | ERJ3GEYG102 | M.RESISTOR CH 1/16W 1K | 1 | |
| R317 | ERJ3GEY0R00 | M.RESISTOR CH 1/16W 0 | 1 | |
| R353 | ERJ3GEY0R00 | M.RESISTOR CH 1/16W 0 | 1 | |
| R354 | ERJ3GEYJ104 | M.RESISTOR CH 1/16W 100K | 1 | |
| R355,56 | ERJ12YJ682 | M.RESISTOR CH 1/2W 6.8K | 2 | |
| R357 | ERJ3GEYJ104 | M.RESISTOR CH 1/16W 100K | 1 | |
| R358 | ERJ3GEYJ334 | M.RESISTOR CH 1/16W 330K | 1 | |
| R359,60 | ERJ3GEYJ104 | M.RESISTOR CH 1/16W 100K | 2 | |
| R361,62 | ERJ3RBD273 | M.RESISTOR CH 1/16W 27K | 2 | |
| R363,64 | ERJ3RBD132 | M.RESISTOR CH 1/16W 1.3K | 2 | |
| | | | | |
| | | | | |
| | | | | |
| | | | | |
| | | | | |
| ■ E4 | VEP04870A | SW C.B.A. | 1 | (RTL) |
| | | | | |
| | | | | |
| D201 | MA142WK | DIODE | 1 | |
| | | | | |
| P251 | K1KA30B00055 | CONNECTOR (MALE) | 1 | |
| P252,53 | VJS3826A013 | CONNECTOR (FEMALE) | 2 | |
| | | | | |
| QR251,52 | UNR521300L | TRANSISTOR | 2 | |
| | | | | |
| R201,02 | ERJ3GEYJ103 | M.RESISTOR CH 1/16W 10K | 2 | D0GB103JA002 |
| R204 | ERJ3GEY0R00 | M.RESISTOR CH 1/16W 0 | 1 | |
| R206 | ERJ3GEYJ103 | M.RESISTOR CH 1/16W 10K | 1 | D0GB103JA002 |
| R208,09 | ERJ3GEYJ103 | M.RESISTOR CH 1/16W 10K | 2 | D0GB103JA002 |
| R212 | ERJ3GEYJ103 | M.RESISTOR CH 1/16W 10K | 1 | D0GB103JA002 |
| R251,52 | ERJ3GEY0R00 | M.RESISTOR CH 1/16W 0 | 2 | |
| | | | | |
| SW201 | K0D142A00034 | SWITCH | 1 | |
| SW202-04 | K0D122A00126 | SWITCH | 3 | |
| SW205 | K0D142A00034 | SWITCH | 1 | |
| SW206,07 | K0D122A00126 | SWITCH | 2 | |
| | | | | |
| | | | | |
| | | | | |
| | | | | |
| | | | | |
| ■ E5 | VEP04871A | VR C.B.A. | 1 | (RTL) |
| | | | | |
| | | | | |
| C101,02 | F3H1D2260003 | T.CAPACITOR CH 20V 22U | 2 | |
| | | | | |
| P101 | K1ZZ00001279 | CONNECTOR | 1 | |
| | | | | |
| R101 | ERJ3RBD103 | M.RESISTOR CH 1/16W 10K | 1 | |
| R103 | ERJ3RBD103 | M.RESISTOR CH 1/16W 10K | 1 | |
| R105-10 | ERJ3GEY0R00 | M.RESISTOR CH 1/16W 0 | 6 | |
| R113 | ERJ3GEY0R00 | M.RESISTOR CH 1/16W 0 | 1 | |
| | | | | |
| VR101,02 | D2BBA14A0002 | V.RESISTOR 10K | 2 | |

# SECTION 1

# SERVICE INFORMATION

## CONTENTS


1. SERVICING FIXTURES AND TOOLS ..... INF-1
   1-1. Summary Table of Servicing Fixtures and Tools ..... INF-1
2. MAINTENANCE ..... INF-4
   2-1. Maintenance Schedule ..... INF-4
   2-2. Cleaning of Tape Transport Part ..... INF-4
3. MANUAL TAPE EJECT (EMERGENCY EJECT) ..... INF-5
4. LITHIUM BATTERY ..... INF-6
   4-1. Replacement Procedure ..... INF-6
5. SERVICE MENU ..... INF-7
   5-1. Diagnostic Menu ..... INF-7
      5-1-1. How to display the Error Rate ..... INF-8
      5-1-2. DIF Status Display ..... INF-9
      5-1-3. Software Version Display ..... INF-10
      5-1-4. Hour Meter Display ..... INF-10
      5-1-5. Auto Off Log ..... INF-11
   5-2. Adjust Menu ..... INF-12
      5-2-1. Connection of EVR Tools ..... INF-12
      5-2-2. Setting item for LISTA Adjustment (Only VCR mode) ..... INF-13
      5-2-3. Adjustment item for Video Level ..... INF-14
      5-2-4. Hour Meter Reset and LOG Clear (Only VCR mode) ..... INF-14
6. CAMERA REMOTE ..... INF-16
   6-1. Record start / stop input ..... INF-16
   6-2. Zooming control input ..... INF-16
7. INTERCONNECTION ..... INF-17
8. CIRCUIT BOARD LAYOUT ..... INF-18

# 1. SERVICING FIXTURES AND TOOLS

The following servicing tools are required for mechanical and electrical servicing and alignment.

The items marked **"NEW"** in the following list are necessary for the AG-DVC30/32/33.

Please refer to **"Y"** and **"N"** in column of table below, which tools required for servicing the NTSC and PAL model.

Please refer to **"Y"** in column of table below, these tools were also use for servicing the AG-DVX100/A and AG-DVC180/A.

## 1-1. Summary Table of Servicing Fixtures and Tools

| No | Parts No. | NAME | NTSC Model | PAL Model | AG-DVX100/A AG-DVC180/A | REMARK |
|---|---|---|---|---|---|---|
| 1 | VFM3010EDS | DV Alignment Tape (Color bar) | Y | N | Y | |
| 2 | VFM3110EDS | DV Alignment Tape (Color bar) | N | Y | Y | |
| 3 | VFM3000EDS | DV Alignment Tape (Linearity) | Y | Y | Y | |
| 4 | VFK1217 | Tape End/Beg Detect Cassette | Y | Y | Y | |
| 5 | *VFK1908 | EVR Adjustment Software | Y | N | N | **NEW** Download from the WEB site. |
| 6 | *VFK1909 | EVR Adjustment Software | N | Y | N | **NEW** Download from the WEB site. |
| 7 | *VFK1481K | LISTA Software | Y | Y | Y | Download from the WEB site. |
| 8 | VFK1308P | Measuring Board | Y | Y | Y | |
| 9 | VFK1309A | EVR Connector Board | Y | Y | Y | **NOTE 1** |
| 10 | VFK1763 | Connector Adapter | Y | Y | N | 60-30pin |
| 11 | VJA0941 | DC Cable | Y | Y | Y | 2 pieces Required |
| 12 | VFK1317 | 30pin Flat Cable | Y | Y | Y | 2 pieces Required |
| 13 | VFK1164TAR43 | 43mm Attachment Ring | Y | Y | Y | |
| 14 | VFK1164TCM01 | Collimator Set (Infinity Lens) | Y | Y | Y | |
| 15 | VFK1345 | CC Filter Holder | Y | Y | Y | |
| 16 | VFK1346 | Step Down Ring | Y | Y | Y | |
| 17 | VFK1659 | Step-Up Ring (43mm-49mm) | Y | Y | Y | |
| 18 | VFK1660 | Step-Up Ring (49mm-62mm) | Y | Y | Y | |
| 19 | VFK1341 | CC Filter (LB40) | Y | N | Y | |
| 20 | VFK1342 | CC Filter (LB80) | N | Y | Y | |
| 21 | VFK1347 | CC Filter (LB120) | Y | Y | Y | |
| 22 | VFK1884 | CC Filter (LBA2) | Y | Y | Y | |
| 23 | VFK1888 | CC Filter (LBB6) | Y | Y | Y | |
| 24 | VFK1885 | CC Filter (LBB2) | Y | N | Y | |
| 25 | VFK1886 | CC Filter (CC C10) | N | Y | Y | |
| 26 | VFK1887 | CC Filter (CC C20) | N | Y | Y | |
| 27 | VFK1409A | Measuring Board | Y | Y | Y | **NOTE 2** |
| 28 | VFK1899 | Post Driver | Y | Y | N | **NEW, NOTE 3** |
| 29 | VFK1810 | LISTA Measuring Board | Y | Y | Y | **NOTE 2** |
| 30 | VFK1186 | LISTA Cable | Y | Y | Y | |
| 31 | VFK1300 | A/D Converter Board | Y | Y | Y | ISA PC Board. |

**NOTE:**

1. If you already have VFK1309, it can be modified to VFK1309A. (Refer to item "1-1. Modification procedure of VFK1309" on page ELE-1 in section 4.)
2. If you already have VFK1409S, it can be used for LISTA adjustment with VFK1810 instead of VFK1409A. (Refer to item "1-5. Connection of LISTA Adjustment system" on page MECH-3 in section 3.)
3. This Post Driver use for servicing the "A" mechanism of consumer model.

**1** **VFM3010EDS**

**2** **VFM3110EDS**
DV Alignment Tape
(Color bar)

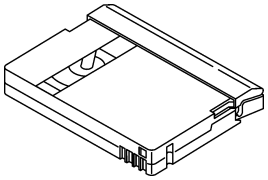

**3** **VFM3000EDS**
DV Alignment Tape
(Linearity)

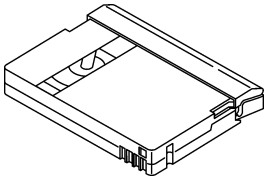

**4** **VFK1217**
Tape End / Beg. Detect
Cassette

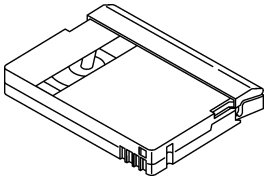

**5** **VFK1908**

**6** **VFK1909**
EVR Adjustment Software

**7** **VFK1481K**
LISTA Software

**DOWN LOAD**

**8** **VFK1308P**
Measuring Board

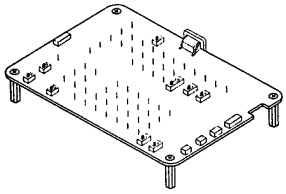

**9** **VFK1309A**
EVR Connector Board

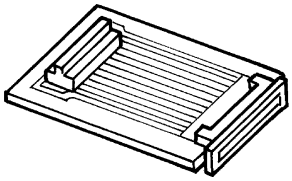

**10** **VFK1763**
Connector Adapter

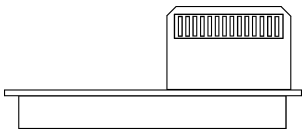

**11** **VJA0941**
DC Cable

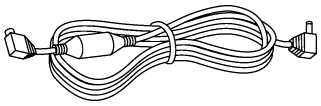

**12** **VFK1317**
30pin Flat Cable

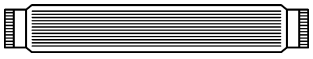

(In case of using VFK1308P, required 2pcs. of this cable)

**13** **VFK1164TAR43**
43 mm Attachment Ring

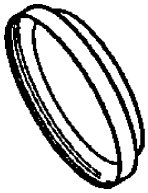

**14** **VFK1164TCM01**
Collimator Set
(Infinity Lens)

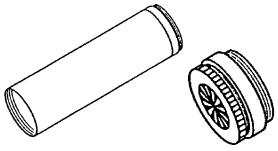

**15** **VFK1345**
CC Filter Holder

**16** **VFK1346**
Step Down Ring

VFK1345 VFK1346

**17** **VFK1659**
Step-up Ring (43mm 49mm)

**18** **VFK1660**
Step-up Ring (49mm 62mm)

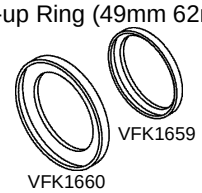

VFK1659

VFK1660

**19** **VFK1341** (LB40)

**20** **VFK1342** (LB80)

**21** **VFK1347** (LB120)

CC Filter

**22** **VFK1884** (LBA2)

**23** **VFK1888** (LBB6)

**24** **VFK1885** (LBB2)

**25** **VFK1886** (CC C10)

**26** **VFK1887** (CC C20)

CC Filter

**27** **VFK1409A**
Measuring Board

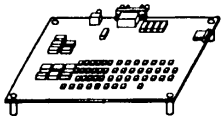

**28** **VFK1899**
Post Driver

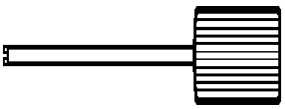

**29** **VFK1810**
LISTA Measuring Board

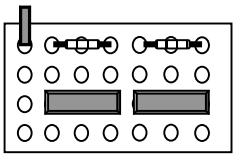

**30** **VFK1186**
LISTA Cable

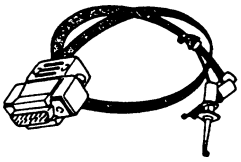

**31** **VFK1300**
A/D Converter Board

To determine which servicing fixtures and tools are required for each adjustment, refer to the following table.

| No. | Parts No. | NAME | ADJUSTMENT ITEM |
|---|---|---|---|
| 1<br>2 | VFM3010EDS<br>VFM3110EDS | DV Alignment Tape (Color bar)<br>DV Alignment Tape (Color bar) | 7-2. PG shifter Adjustment (SEC.4) |
| 3 | VFM3000EDS | DV Alignment Tape (Linearity) | 1-8. LISTA Sensitivity Detection (SEC.3)<br>1-9. LISTA Linearity Adjustment (SEC.3) |
| 4 | VFK1217 | Tape End/Beg Detect Cassette | 7-1. Sensitivity adj. of Tape sensors Adjustment (SEC.4) |
| 5<br>6 | VFK1908<br>VFK1909 | EVR Adjustment Software | 4. EEPROM (SEC.4)<br>5. ZOOM SW Center Value Adjustment (SEC.4)<br>6. CAMERA ADJUSTMENT PROCEDURE (SEC.4)<br>7. VTR ADJUSTMENT PROCEDURE (SEC.4)<br>8. LCD ADJUSTMENT PROCEDURE (SEC.4)<br>9. EVF ADJUSTMENT PROCEDURE (SEC.4) |
| 7 | VFK1481K | LISTA Software | 1-8. LISTA Sensitivity Detection (SEC.3)<br>1-9. LISTA Linearity Adjustment (SEC.3) |
| 8<br>9<br>10<br>11<br>12 | VFK1308P<br>VFK1309A<br>VFK1763<br>VJA0941<br>VFK1317 | Measuring Board<br>EVR Connector Board<br>Connection Adapter<br>DC Cable<br>30pin Flat Cable | 5-2. Adjust Menu (SEC.1)<br>1-8. LISTA Sensitivity Detection (SEC.3)<br>1-9. LISTA Linearity Adjustment (SEC.3)<br>1-11. Self-REC/PLAY Envelope Waveform Confirmation (SEC.3)<br>4. EEPROM (SEC.4)<br>5. ZOOM SW Center Value Adjustment (SEC.4)<br>6. CAMERA ADJUSTMENT PROCEDURE (SEC.4)<br>7. VTR ADJUSTMENT PROCEDURE (SEC.4)<br>8. LCD ADJUSTMENT PROCEDURE (SEC.4)<br>9. EVF ADJUSTMENT PROCEDURE (SEC.4) |
| 13<br>14 | VFK1164TAR43<br>VFK1164TCM01 | 43mm Attachment Ring<br>Collimator Set (Infinity Lens) | 6-6. Zoom Tracking Adjustment (SEC.4) |
| 15<br>16<br>17<br>18 | VFK1345<br>VFK1346<br>VFK1659<br>VFK1660 | CC Filter Holder<br>Step Down Ring<br>Step-Up Ring (43mm-49mm)<br>Step-Up Ring (49mm-62mm) | 6-8-2. Outdoor(5100K) White Balance Adjustment (SEC.4)<br>6-8-3. Cool white(4500K) White Balance Adjustment (SEC.4)<br>6-8-4. Warm white(3600K) White Balance Adjustment (SEC.4) |
| 19 | VFK1341 | CC Filter (LB40) | 6-8-4. Warm white(3600K) White Balance Adjustment (SEC.4) |
| 20 | VFK1342 | CC Filter (LB80) | 6-8-3. Cool white(4500K) White Balance Adjustment (SEC.4) |
| 21 | VFK1347 | CC Filter (LB120) | 6-8-2. Outdoor(5100K) White Balance Adjustment (SEC.4)<br>6-8-3. Cool white(4500K) White Balance Adjustment (SEC.4) |
| 22<br>23 | VFK1884<br>VFK1888 | CC Filter (LBA2)<br>CC Filter (LBB6) | 6-8-2. Outdoor(5100K) White Balance Adjustment (SEC.4) |
| 24<br>25 | VFK1885<br>VFK1886 | CC Filter (LBB2)<br>CC Filter (CC C10) | 6-8-4. Warm white(3600K) White Balance Adjustment (SEC.4) |
| 26 | VFK1887 | CC Filter (CC C20) | 6-8-3. Cool white(4500K) White Balance Adjustment (SEC.4) |
| 27 | VFK1409A | Measuring Board | 1-8. LISTA Sensitivity Detection (SEC.3)<br>1-9. LISTA Linearity Adjustment (SEC.3) |
| 28 | VFK1899 | Post Driver | 1-9. LISTA Linearity Adjustment (SEC.3)<br>1-10. Tape Path Confirmation (SEC.3)<br>1-11. Self-REC/PLAY Envelope Waveform Confirmation (SEC.3) |
| 29<br>30<br>31 | VFK1810<br>VFK1186<br>VFK1300 | LISTA Measuring Board<br>LISTA Cable<br>A/D Converter Board | 1-8. LISTA Sensitivity Detection (SEC.3)<br>1-9. LISTA Linearity Adjustment (SEC.3) |

# 2. MAINTENANCE

Maintenance is done by periodically performing suitable maintenance servicing in order to maintain the best condition, so that the user can use the equipment safely. Video equipment with mounted mechanisms have parts which will wear, and their wear and deterioration cause troubles. Dust and dirt also can impair stable operation. For this reason it is important not to just perform repair at the time of trouble, but also to perform suitable maintenance at regular intervals.

The maintenance schedule requires replacement of mechanism unit, which contains a cylinder unit and so on.

## 2-1. Maintenance Schedule

| No. | Part Name | Part No. | Cleaning | Replacement | Remark |
|---|---|---|---|---|---|
| --- | Tape Transport Part | ------ | 100 hours | ------ | *1 |
| 1 | Mechanism Chassis Unit | VXY1843 | ------ | Every 2000 hours | *2 |

**Note:**
Hours of use are based on the head rotation hours. (Head rotation hours can be confirm on item DRUM RUN in DIAGNOSTIC menu.)
Hours of use are recommendation. It may depend on temperature, humidity, quality of tape or dust condition.
Hours of use are listed as the reference of maintenance. They do not mean guarantee hours.
HOUR METER can be reset on ADJUST menu (Refer to item “5-2-4. Hour Meter Reset and LOG clear” in this section.)
*1. Tape Transport part is cleaned by cleaning liquid.
*2. Please refer to the most recent execution outline, as the maintenance specifications and the part numbers may change.

## 2-2. Cleaning of Tape Transport Part

Please clean the below indicated tape transport parts with cleaning liquid when needed.
(Tension Post, S1 Post, Cylinder & Heads, T1 Post, T2 Post, T3 Post, Capstan Shaft and Pinch Roller)

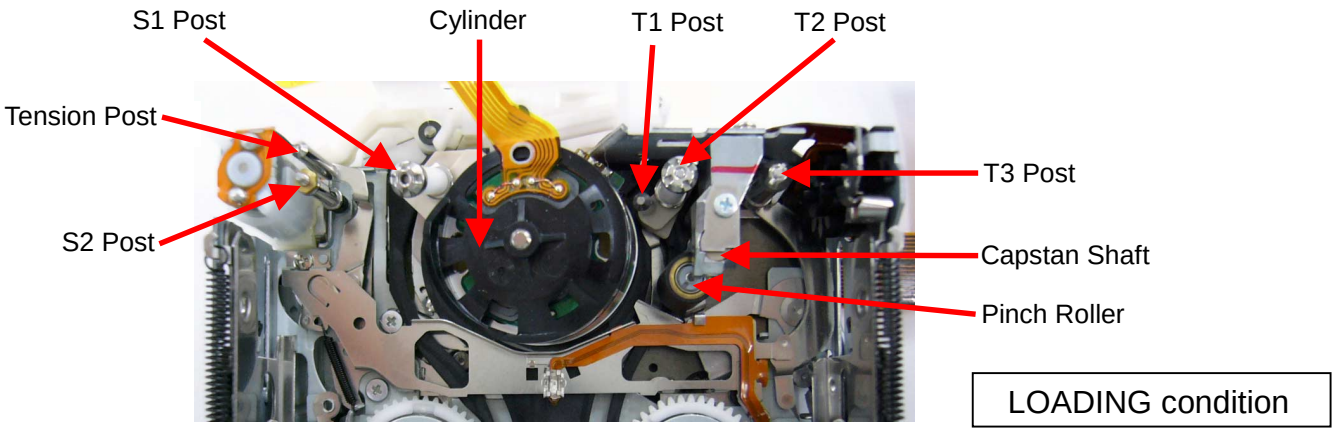


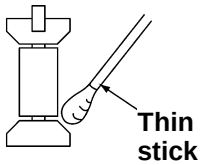


When cleaning the post, wrap a cloth on a pick. Wipe each post with a cloth dipped in cleaning liquid. And wipe it again with dry cloth.

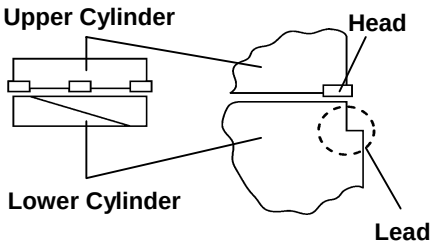


Do not forget cleaning the upper Cylinder, Head, tape transport part of Lower Cylinder and Lead, when cleaning the Cylinder.

# 3. MANUAL TAPE EJECT (EMERGENCY EJECT)

When the tape cannot be ejected by normal operation because of trouble in the electrical system or mechanical system, the tape can be removed from the unit manually by using the following method.

**NOTE:** By below indicated method, The unit will not take up tape slack. Be careful when removing the tape from Cassette Holder.

1. Remove the Mech. Cover (R).

2. Supply 4.5 Volts using 3 AA batteries in series to unload the posts using the motor.

3. Stop supplying the power when the tape is ejected and remove the tape from Cassette Holder.

**<How to rolls up tape>**

Be sure to take up the tape slack so that tape does not become damaged.

1. Remove the Mechanism Unit.
2. Supply 4.5 Volts to unload the posts using the motor.
3. Stop supplying the power at unloading complete position.

**NOTE:** If power is supplied too long, then the Cassette tape will be ejected prematurely.

4. Turn the Gear of Supply Reel as shown in figure, and this will take up the slack in the tape.
5. Supply 4.5 Volts again to eject the tape using the motor and remove the tape from Cassette Holder.

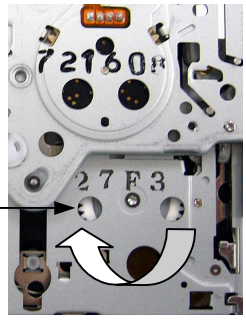

# 4. LITHIUM BATTERY

## 4-1. Replacement Procedure

1. There is a Lithium battery on the R_SIDE C.B.A..
2. Unsolder the Lithium battery “Ref No: B6401/Part No: VSB0407” and then replace with the new one.

**<INFORMATION>**

The lithium battery is not rechargeable and may be discharged.

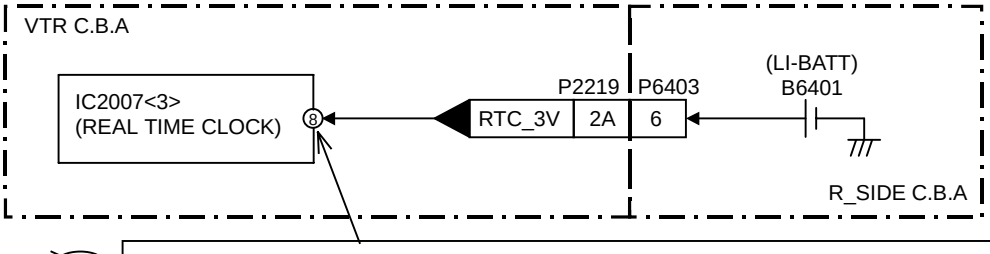


If input voltage becomes less than 2.0V, warning information is displayed.

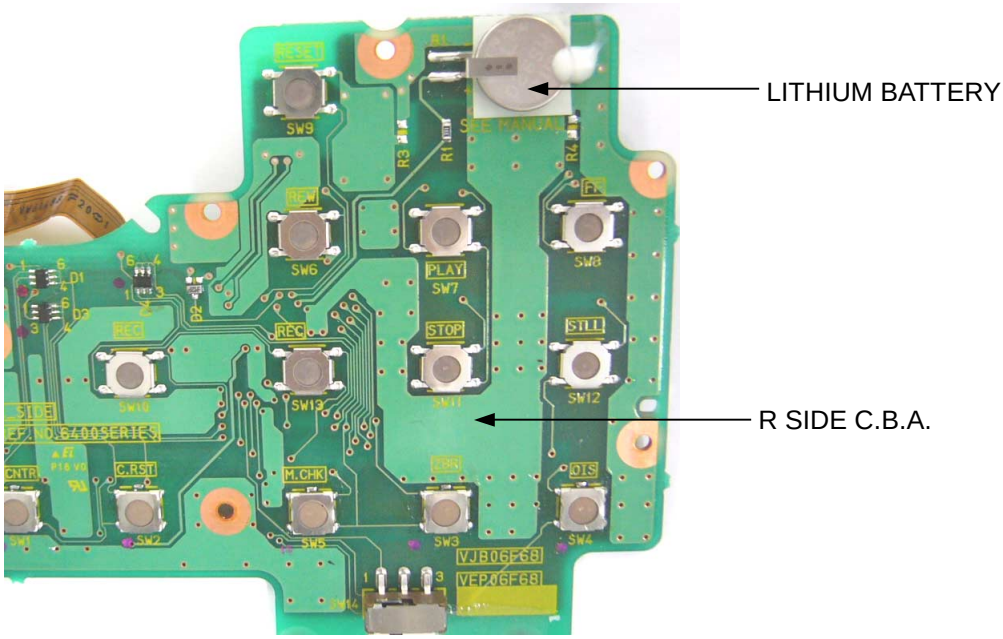


**NOTE:**

The lithium battery is a critical component.
It must never be subjected to excessive heat of discharge.
It must therefore only be fitted in equipment designed specifically for its use.
Replacement batteries must be of the same type and manufacture.
They must be fitted in the same manner and location as the original battery, with the correct polarity contacts observed.
Do not attempt to re-charge the old battery or re-use it for any other purpose.
It should be disposed of in waste products destined for burial rather than incineration.

**CAUTION**

Danger of explosion if battery is incorrectly replaced.
Replace only with the same or equivalent type recommended by the equipment manufacturer.
Discard used batteries according to manufacture’s instructions.

# 5. SERVICE MENU

The DIAGNOSTIC and ADJUST menu can be displayed as follows.

Press and hold the **“MENU button”**. Press and hold the **“MODE CHK button”** and **“REW button”** at the same time, DIAGNOSTIC and ADJUST menu can be displayed.
Next, turn the **“MULTI-DIAL”** to select the DIAGNOSTIC or ADJUST menu, and press **“MULTI-DIAL”** button to open the DIAGNOSTIC or ADJUST menu.
**NOTE:** Another way to display the "DIAG" and “ADJUST" menu when you use the EVR tools is to place the VTR test SW on the VFK1308P to the L position. See item 5-2-1 how to connect the EVR tools, on page INF-12.

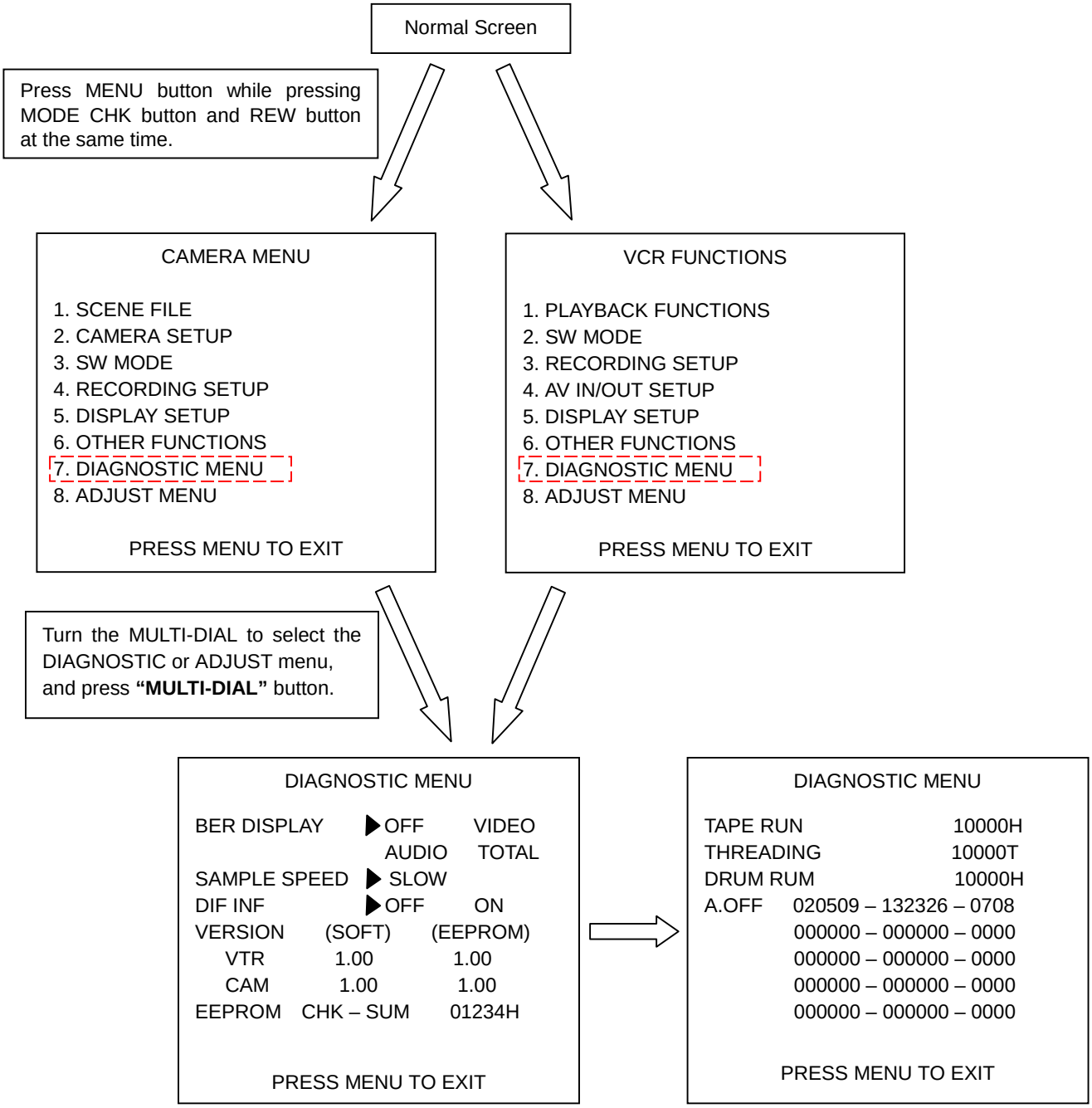


## 5-1. Diagnostic Menu

The DIAGNOSTIC menu is the menu to confirm the condition of the VCR and it is possible to do the confirmation of the error rate, software version, auto off log and DIF status.

## 5-1-1. How to display the Error Rate.

This unit can be displayed Error Rate and it shows the playing condition of the VCR.
In case of the error rate is displayed, BER DISPLAY and SAMPLE SPEED mode is select on DIAGNOSTIC menu.

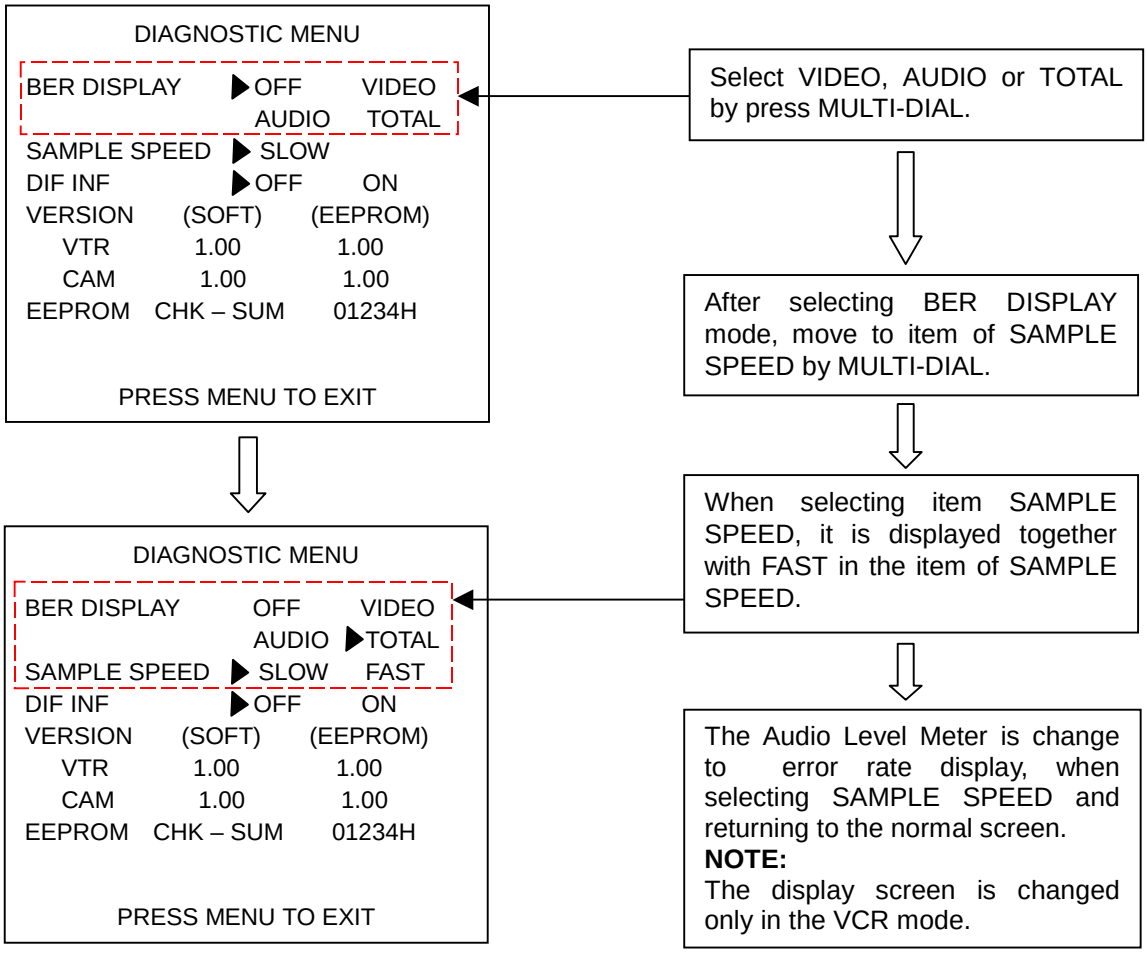


When selecting TOTAL in BER DISPLAY mode, it is displayed “TOT” and if select VIDEO, it is displayed “VID” and if select AUDIO, it is displayed “AUD”.

The color of the bar
In case of green display: Error rate is good
In case of red display: Error rate is bad

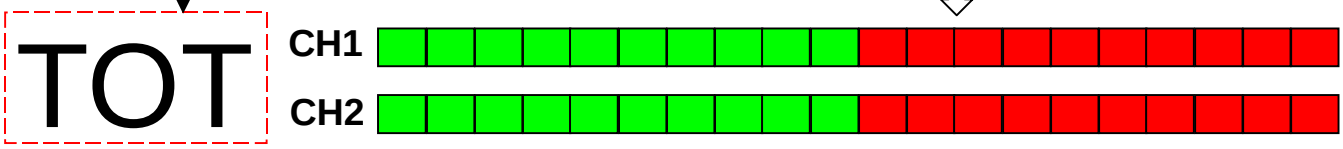

## How to confirm the Error rate.

1. Select the TOTAL in item of BER DISPLAY.
2. Record the color bar signal on LP mode and playback the recorded portion. Confirm that the number of bar on display within 10 bars or less. The less bars displayed the better the error rate.

## 5-1-2. DIF STATUS Display.

```
DIAGNOSTIC MENU

BER DISPLAY      ▶OFF      VIDEO
                  AUDIO    TOTAL
SAMPLE SPEED     ▶ SLOW
DIF INF            OFF    ▶ON
VERSION      (SOFT)     (EEPROM)
   VTR        1.00        1.00
   CAM        1.00        1.00
EEPROM    CHK – SUM      01234H

PRESS MENU TO EXIT
```

Set the item “DIF INF” to ON and it does ON/OFF of the DIF STATUS display by pressing the MODE CHECK button on normal screen.

The displayed contents are as follows.

| Items | Description | Remark |
|---|---|---|
| NODECNT | Number of NODE connections. | |
| MY_ID | NODE ID of this unit. | |
| ROOT_ID | ROOT ID | |
| IRM_ID | PHY ID of IRM | IRM(Isochronous Resonance Manager) |
| IN_CH | Input channel number of Isochronous data. | |
| OUT_CH | Output channel number of Isochronous data. | |
| DIF MODE | DIF mode | |
| RX_IN | Received condition of Isochronous data. | |
| O_BBC | Transmitted condition of Isochronous data. | |
| STYPE | Type of VIDEO signal | |
| FIELD | NTSC/PAL | |
| IN_SPD | Speed of Isochronous data. | OUT_SPD in CAMERA MODE |
| UID | USER ID of 1394 equipment | |
| AS | Source pack of AUDIO | |
| ASC | Source control pack of AUDIO | |
| VS | Source pack of VIDEO | |
| VSC | Source control pack of VIDEO | |
| HEADER | HEADER pack | |

## 5-1-3. Software Version Display.

This unit have two pieces of microprocessor and two pieces of EEPROM

| --- | Camera board | VTR board |
|---|---|---|
| Microprocessor | IC3500 | IC2001 |
| EEPROM | IC3006 | IC2008 |

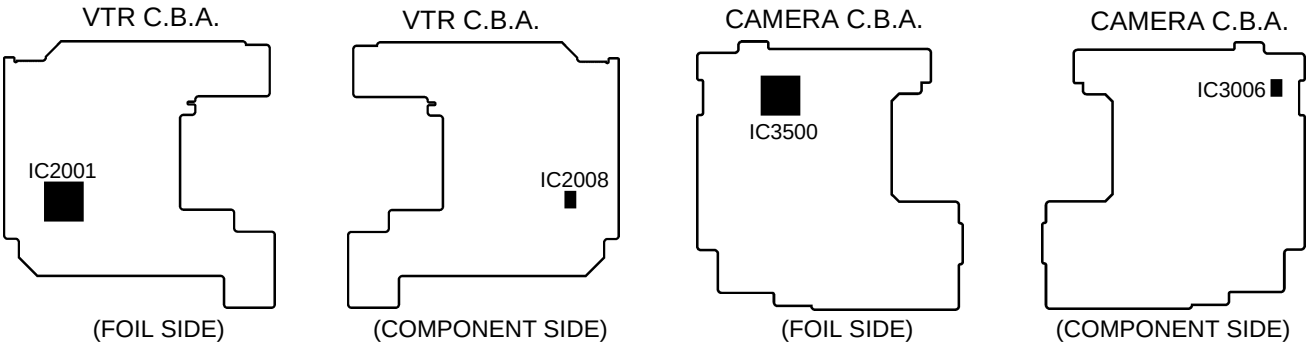


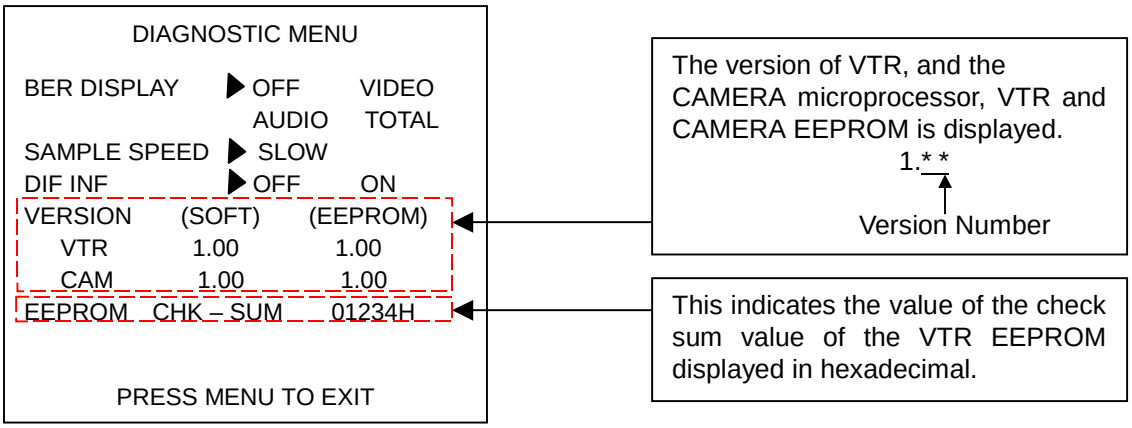


## 5-1-4. Hour Meter Display.

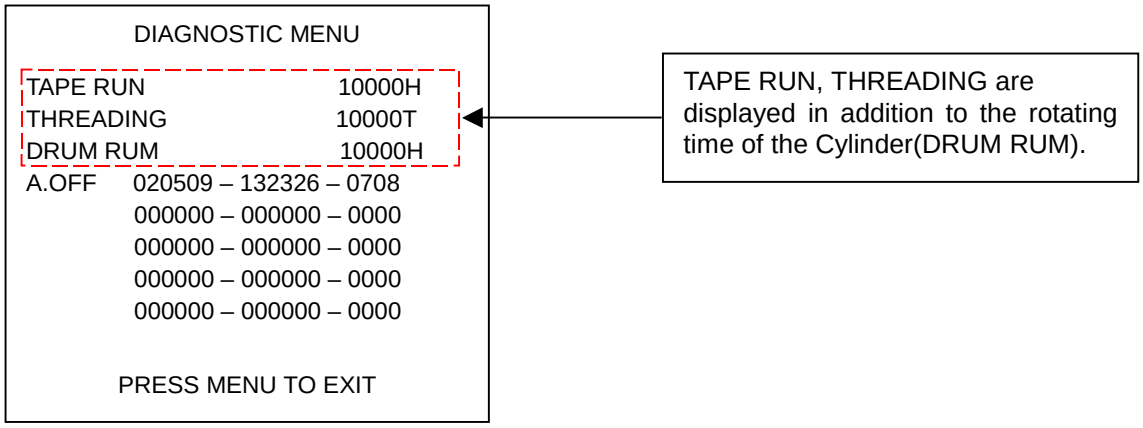


| ITEM | Display Data | Description |
|---|---|---|
| TAPE RUN | 00000H – 99999H | It displays the time that the tape is running in units of hours. |
| THREADING | 00000T – 99999T | It displays the number of times the tape is inserted. |
| DRUM RUN | 00000H – 99999H | It displays the time that the cylinder is rotating in units of hours. It displays same time as in the item HOUR METER of OTHER FUNCTION menu. |

## 5-1-5. Auto Off Log

The VCR can display warning and auto off as alarm display. If case of the auto off occurs, the number and message are displayed in the normal screen. Contents of auto off can be confirm until previous 5 problem in diagnostic menu.

When auto off occurs, VCR memorizes date, time, classified of auto off and mode follow as indicated in format below. Diagnostic menu can display only 5 problems.

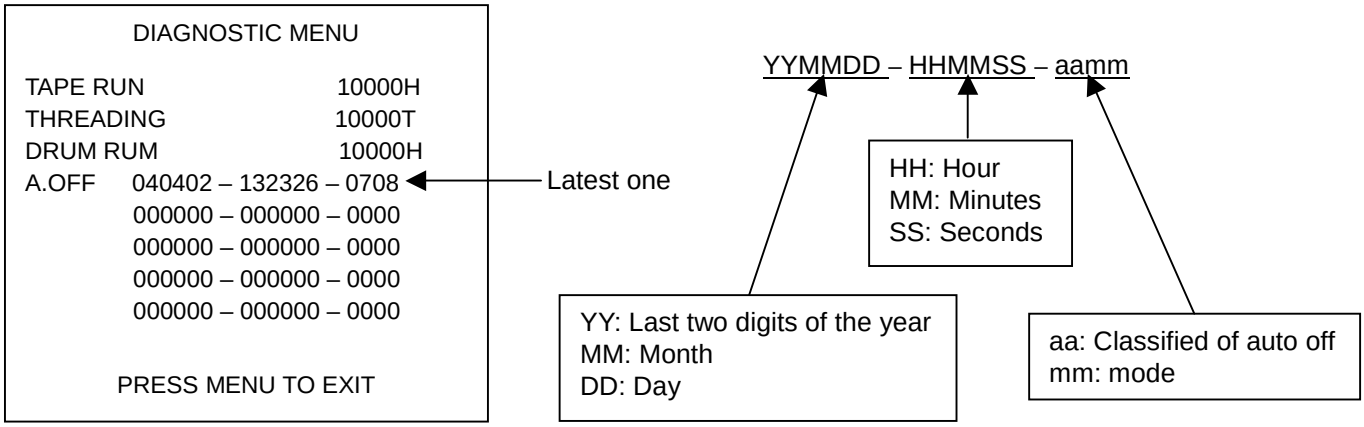


For example, in case of displayed “040402–132326–0708”, Cylinder Lock occurred in normal playback mode at 13:23:26 on April 2th in 2004.
Please refer to below indicated “auto off” and “mode” tables.

### < aa: Classified of AUTO OFF >

| aa | Contents |
|---|---|
| 01 | FOCUS MOTOR LOCK |
| 03 | PSD NG |
| 07 | CYLINDER LOCK |
| 08 | LOADING LOCK |
| 09 | UNLOADING LOCK |
| 0A | T REEL LOCK |
| 0B | S REEL LOCK |

**NOTE:** The messages “FOCUS MOTOR LOCK” and “PSD NG” are warning messages only and not the AUTO OFF mode.

### < mm : MODE >

| mm | Contents | mm | Contents |
|---|---|---|---|
| 01 | EJECT | 12 | AUDIO DUB RECORDING |
| 02 | STOP 1(CAMERA mode) | 13 | CAMERA RECORDING STANDBY |
| 03 | STOP 2(VCR mode) | 14 | CAMERA RECORDING |
| 04 | FAST FORWARD | 15 | CAMERA SEARCH (FORWARD) |
| 05 | REWIND | 16 | CAMERA SEARCH (REVERSE) |
| 06 | RECORDING STANDBY | 17 | REC REVIEW |
| 07 | MORMAL RECORDING | 18 | CAMERA EJECT |
| 08 | NORMAL PLAYBACK | 1D | CYLINDER OFF |
| 09 | REVERSE PLAYBACK | 22 | SEARCH (FORWARD) |
| 0A | CUE (FAST PLAYBACK) | 23 | SEARCH (REVERSE) |
| 0B | REVIEW (FAST PLAYBACK) | 24 | BLANK SEARCH |
| 0C | SLOW PLAYBACK | 25 | FRAME ADVANCE PLAYBACK |
| 0D | REVERSE SLOW PLAYBACK | 26 | REVERSE FRAME ADVANCE PLAYBACK |
| 11 | AUDIO DUB STANDBY | --- | --- |

## 5-2. Adjust Menu

(Page 1)

ADJUST MENU

| | | |
|---|---|---|
| Setting item for LISTA Measurement | ATF GAIN | ----------YES |
| | LINEARITY | ----------YES |
| Setting item for VIDEO OUTPUT Level | Y LEVEL | A1 |
| | C LEVEL | 6B |
| White Blemish Compensation | DEFECT COMP | 0 |
| Setting item for TEST PATTERN signal | TEST PATTERN | OFF |
| VTR Debug Information | VTR DEBUG | 0 |
| Setting item for CAMERA Debug Information display ON/OFF | DEBUG INF | OFF |

PRESS MENU TO EXIT

(Page 2)

RESET MENU

| | |
|---|---|
| The individual reset of the Hour Meter | THREADING RESET |
| | TAPE RUN RESET |
| | CYLINDER RESET |
| Reset of AUTO OFF LOG | AUTO OFF LOG RESET |
| The individual reset of the Hour Meter and AUTO OFF LOG | AUTO OFF & HOUR RESET |

CAUTION !
USE FACTORY ONLY

PRESS MENU TO EXIT

**NOTE 1:** It isn't possible to do the setting of the item of DEFFECT COMP", "TEST PATTERN", "VTR DEBUG" and "DEBUG INF". This is for factory use only.

**NOTE 2:** The Adjust menu screen can not be shifted to Page 2 in the CAMERA mode.
The menu screen can be shifted to Page 2, when connecting EVR tools in the VCR mode and making VTR_TEST SW of the measurement board set to L position.

### 5-2-1. Connection of EVR tools

< Required Tools >

| NAME | Part Number | Pcs. | Remark |
|---|---|---|---|
| Measuring Board | VFK1308P | 1 | |
| EVR Connector Board | VFK1309A | 1 | **NOTE:** VFK1309 also can be use |
| Connection Adapter | VFK1763 | 1 | 60 to 30pin |
| 30pin Flat Cable | VFK1317 | 2 | |

Connect the EVR tools as follows.

1. Unscrew 2 screws and remove the EVR cover.

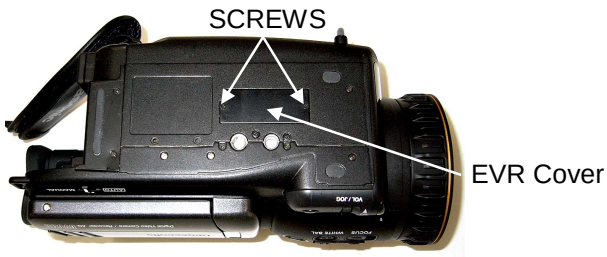

2. Connect the 2 pcs. of 30 pin flat cables (VFK1317) between P101/P102 on the Measuring Board (VFK1308P), and 2 connectors on the EVR Connector Board (VFK1309A). Make sure that the contact surface of 2 pcs. of 30 pin Flat Cables are inner side and direction of the EVR Connector Board is as shown in Figure. Then connect the Connection Adapter (VFK1763).

Connect VFK1763 with VFK1309A as shown in picture.
If the connector is attached backward, it will not work.

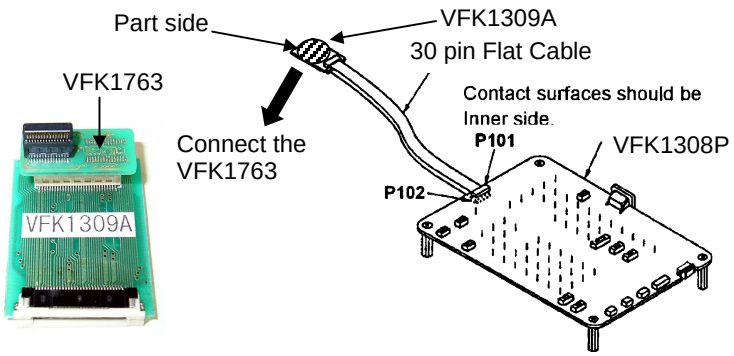


3. Connect the Connection Adapter (VFK1763) to EVR connector in Unit. Then make sure that the direction of the VFK1309A and VFK1763 are correct as shown in Figure.

When the VFK1763 is connected to EVR connector, be careful of the direction of VFK1309A. Please follow as shown in the figure.

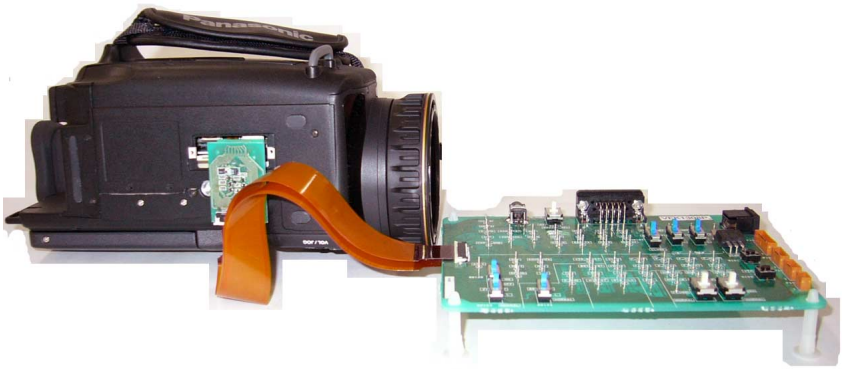

## 5-2-2. Setting item for LISTA Measurement (Only VCR mode)

**ATF GAIN**

To confirm the ATF sensitivity, change the tape speed.
By pressing MULTI-DIAL button, enter the adjustment mode and then exit the menu once. The VTR mode is operated when the menu mode is exited temporarily. The screen below is displayed.
**NOW SERVO ADJUST**
**PUSH MENU TO RETURN**
It will be returned to ADJUST MENU when the MENU key is pressed in this condition.

**LINEARITY**

To confirm the LINEARITY, change the ATF sensitivity.
By pressing MULTI-DIAL button, enter the adjustment mode and then exit the menu once. The VTR mode is operated when the menu mode is exited temporarily. The screen below is displayed.
**NOW SERVO ADJUST**
**PUSH MENU TO RETURN**
It will be returned to ADJUST MENU when the MENU key is pressed in this condition.
**NOTE:** ATF GAIN and LINEARITY can not be selected on CAMERA mode.

## 5-2-3. Adjustment item for Video Level

**Y LEVEL**
Y level of AV OUT and S-VIDEO OUTPUT signal can be adjusted on this item.
The displayed value is the same as value for Luminance level adjustment in EVR adjustment.

**C LEVEL**
C level of AV OUT and S-VIDEO OUTPUT signal can be adjusted on this item.
The displayed value is the same as value for Chroma level adjustment in EVR adjustment.

## 5-2-4. Hour Meter Reset and LOG Clear(Only VCR mode)

The Hour Meter and Auto Off Log data can be reset by items on page 2 in Adjust menu screen. To shift page 2 screen, connect the EVR tools and set VTR_TEST SW of the measurement board to L position follow the item “5-2-1. Connection of EVR Tools”.

**THREADING RESET**
It resets the threading number of times.

**TAPE RUN RESET**
It resets tape running time.

**CYLINDER RESET**
It resets cylinder rotating time.

< How to reset Hour Meter >
1. The following message is displayed when choosing the item to reset with MULTI-DIAL and pushing MULTI-DIAL.
(In case select the item CYLINDER)

```
        CYLINDER RESET

EXECUTE ?

   NO  ──────▶ PUSH JOG
   YES
```

2. Select YES and when pushing MULTI-DIAL, reset is executed and the following message is displayed.

```
        CYLINDER RESET


          INITIAL
        COMPLETED !
```

**AUTO OFF LOG RESET**
It resets auto off log information.

< How to reset Auto Off Log >
1. The following message is displayed when choosing the item “AUTO OFF LOG RESET” and pushing MULTI-DIAL.

```
        AUTO OFF CLEAR

EXECUTE ?

   NO  ──────► PUSH JOG
   YES
```

2. Select YES and when pushing MULTI-DIAL, reset is executed and the following message is displayed.

```
        AUTO OFF CLEAR


          INITIAL
        COMPLETED !
```

**AUTO OFF & HOUR METER RESET**
It resets auto off log information and hour meter at the same time.
The procedure of resetting is same as the item auto off log and the hour meter.

# 6. CAMERA REMOTE

The control equipment is connected to CAMERA REMOTE jack to enable zooming and record start/stop to be initiated by remote control.
**NOTE:** CAMERA remote control is only effective in the CAMERA mode.
Please refer to below indicated specification, When external remote is checked.

| Terminal (refer to figure A) | Contents |
|---|---|
| A | Record start/stop input |
| B | Zooming control input |
| C | GND |

**Equivalent circuit of CAM REMOTE jack**

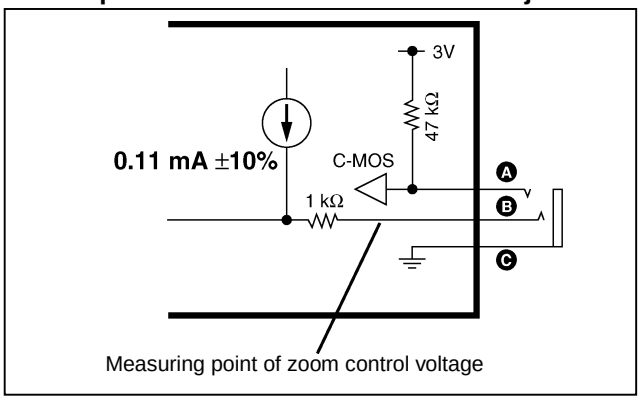


Figure A

## 6-1. Record start / stop input

Every time A terminal connects with the GND, it repeats recording and a recording stop.

## 6-2. Zooming control input

With the voltage to input to the B terminal, the zoom speed changes. As for the relation between the zoom control voltage and the zoom speed, it is as shown in the following.

**Relation between the zoom control voltage and zoom speed**

**NOTE:**
**The control voltage and the zoom speed, which are shown below are a reference value. Because there is a little difference, see as the reference data.**
**And the following figure shows zoom low-speed mode. The relation between the control voltage and the zoom speed in the high speed and the medium (standard) speed modes are a little different.**

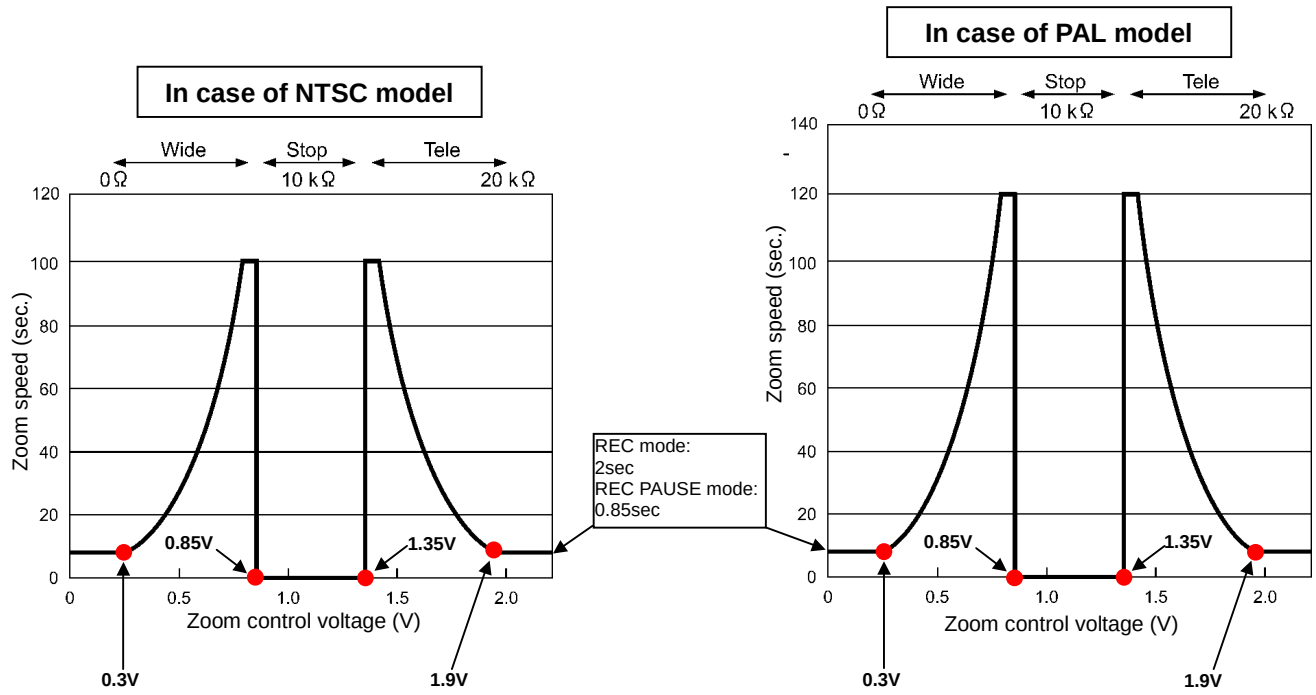

# INTERCONNECTION

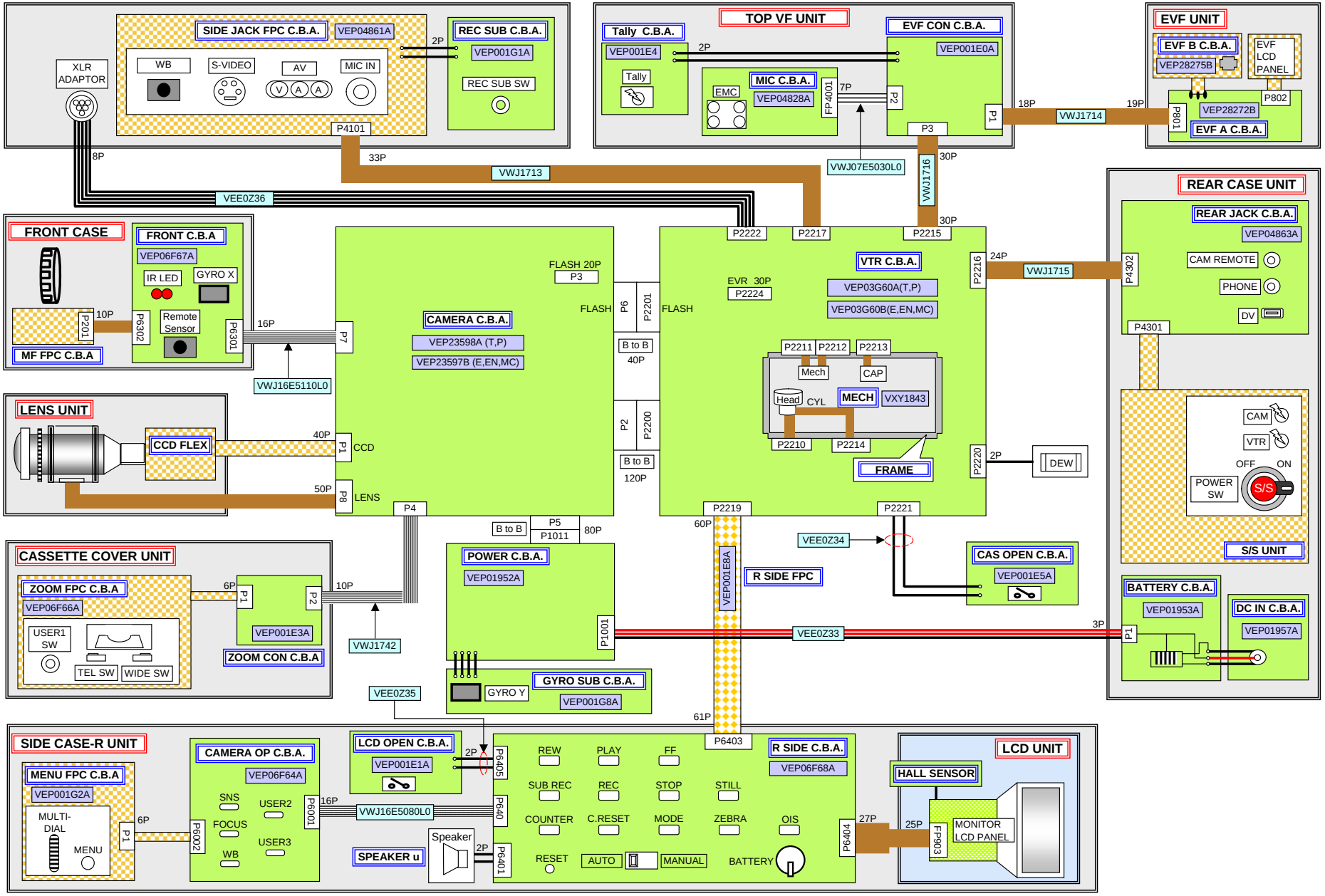

# 8. CIRCUIT BOARD LAYOUT

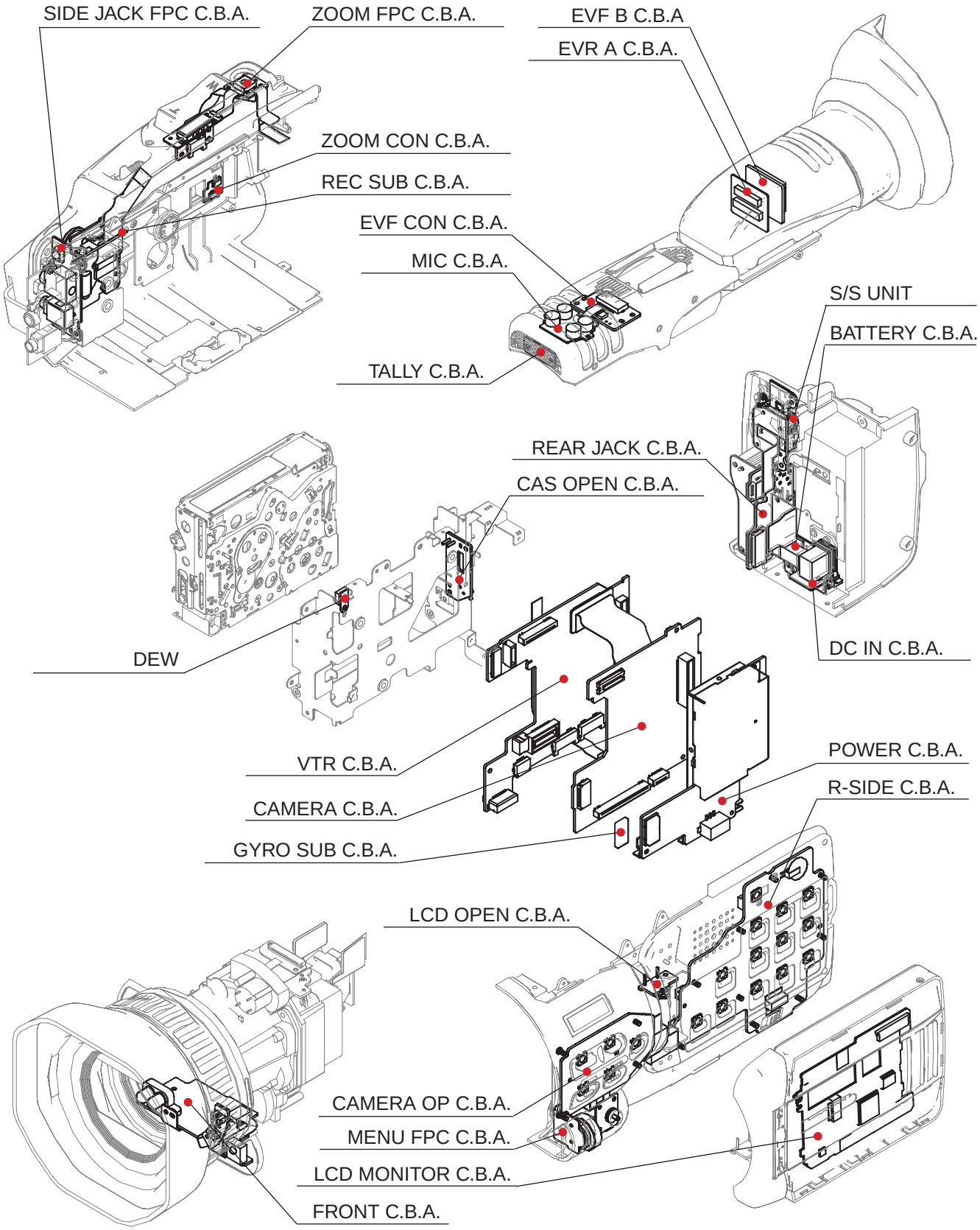

# SECTION 2

# DISASSEMBLY PROCEDURES

## CONTENTS


1. Note when inserting Flexible Cable ..... DIS-1
2. Disassembly Flowchart ..... DIS-1
3. Removal of MIC Case Unit ..... DIS-2
4. Removal of Side Case R Unit ..... DIS-3
5. Removal of POWER C.B.A. ..... DIS-4
6. Removal of TOP VF Unit ..... DIS-5
7. Removal of Front Case Unit ..... DIS-6
8. Removal of Lens Unit ..... DIS-7
9. Removal of Rear Case Unit & CAMERA C.B.A. ..... DIS-8
10. Removal of Cassette Cover Unit ..... DIS-9
11. Removal of Mechanism Unit & VTR C.B.A. ..... DIS-10
12. Removal of LCD Unit ..... DIS-12
13. Removal of EVF Unit ..... DIS-13

## 1. Note when inserting Flexible Cable

The flexible cables, have two sets of contacts on each cable, see the figure below. When inserting these cables into the connector, make sure that the cables are fully inserted, if not they may damage the connector.

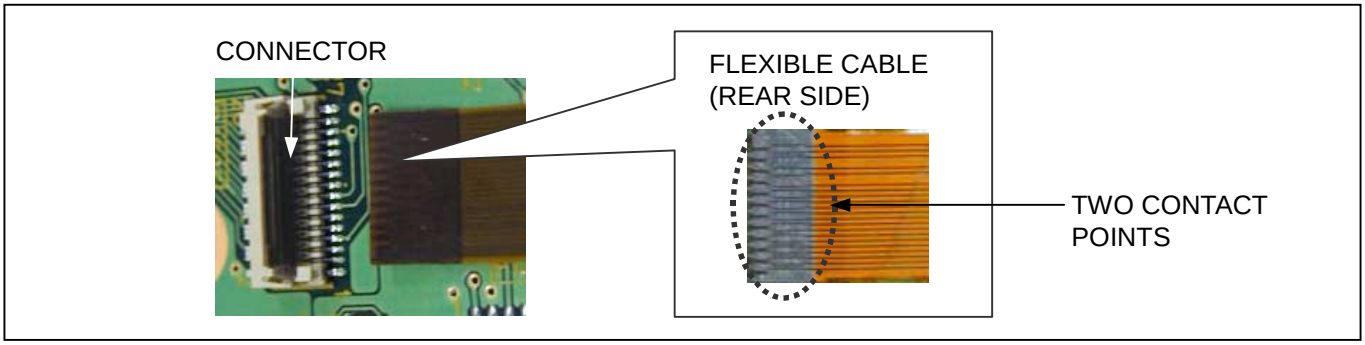


## 2. Disassembly Flowchart

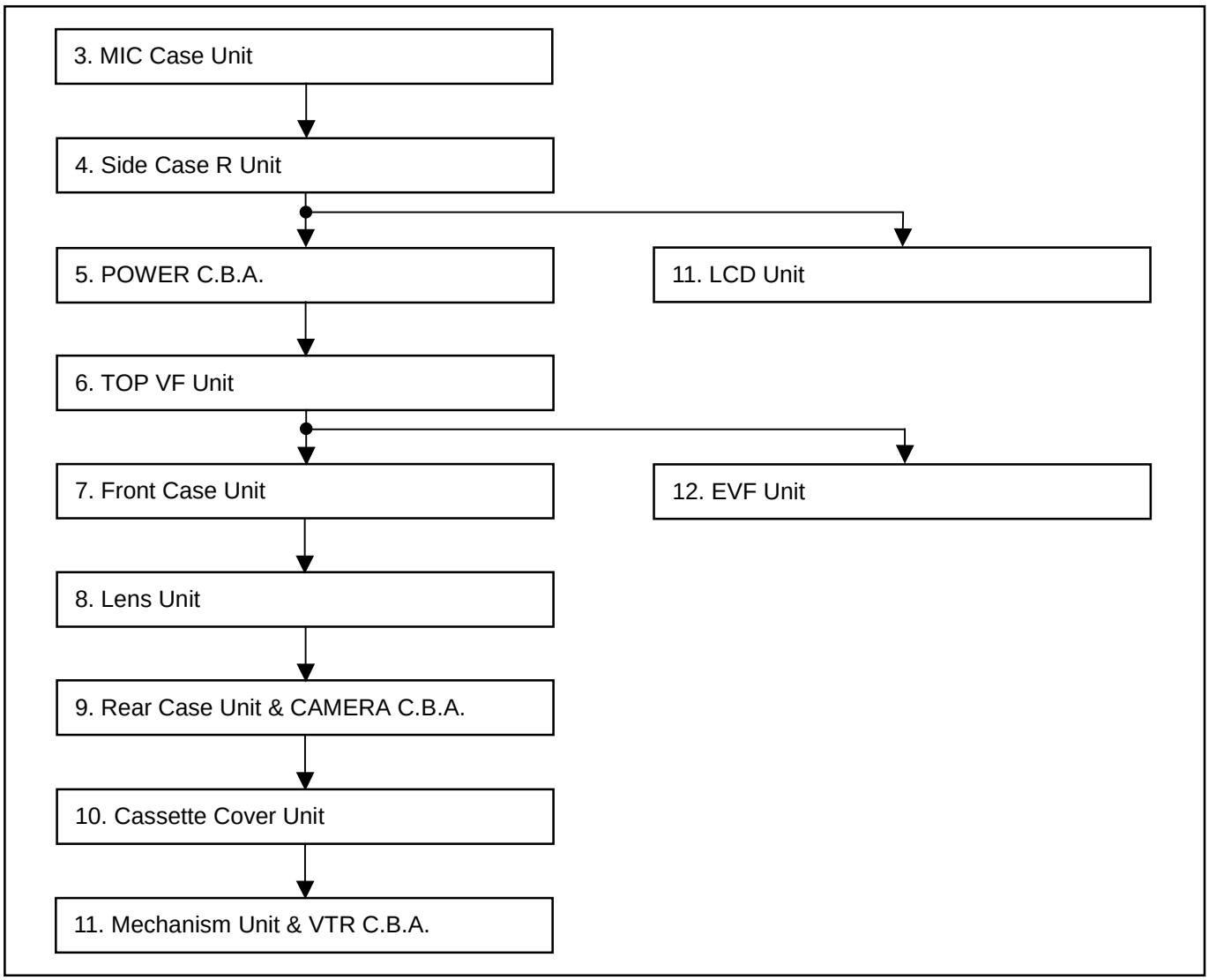

# 3. Removal of MIC Case Unit

1. Unscrew the 6 screws (A) and remove the MIC Case Unit as shown in figure 3-1.

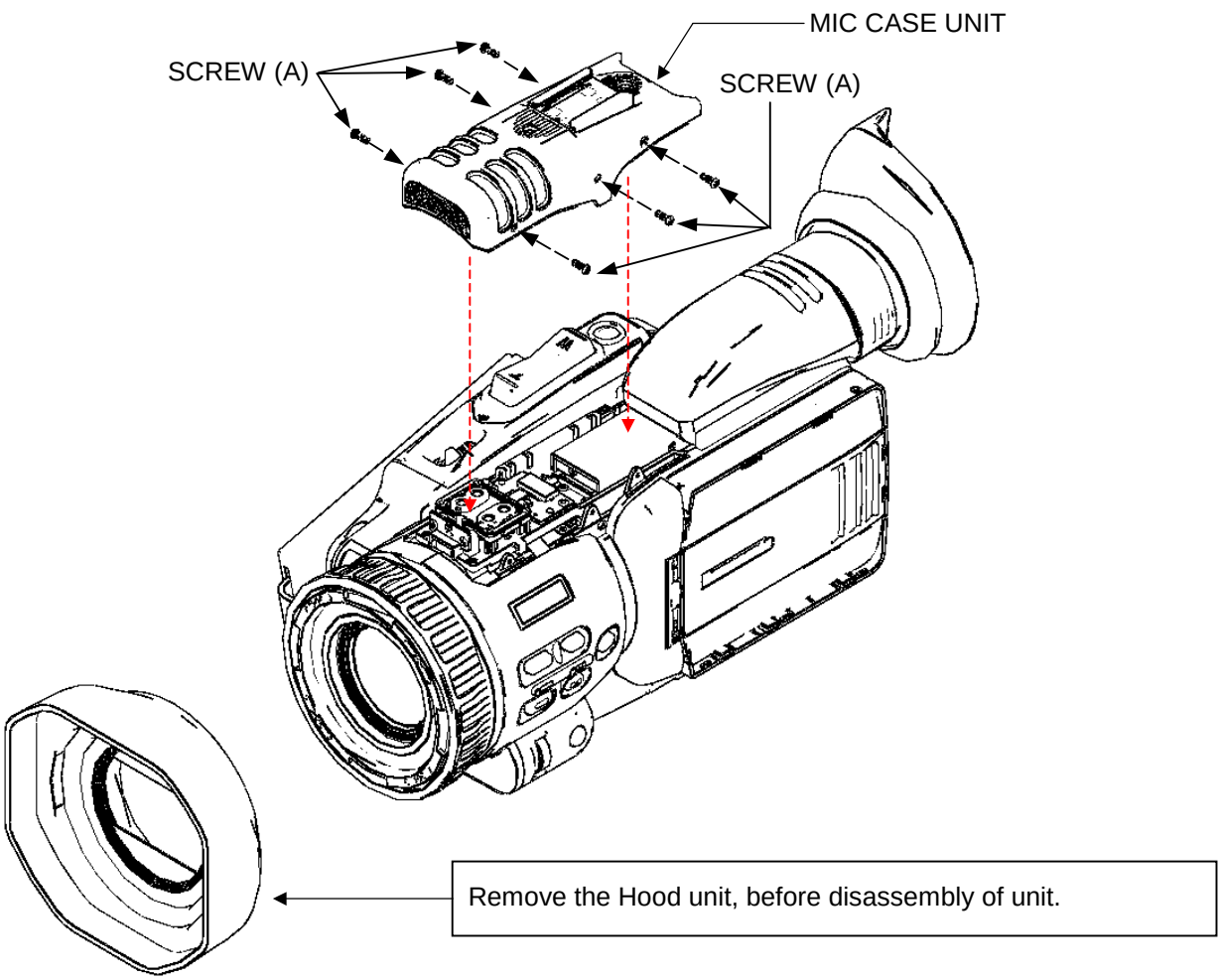


Figure 3-1

## 4. Removal of Side Case R Unit

1. Remove the MIC Case Unit.
2. Unscrew the 10 screws (A) as shown in figure 4-1.
3. Disconnect the connector P6403 on R SIDE C.B.A. and remove the Side Case R Unit as shown in figure 4-1.

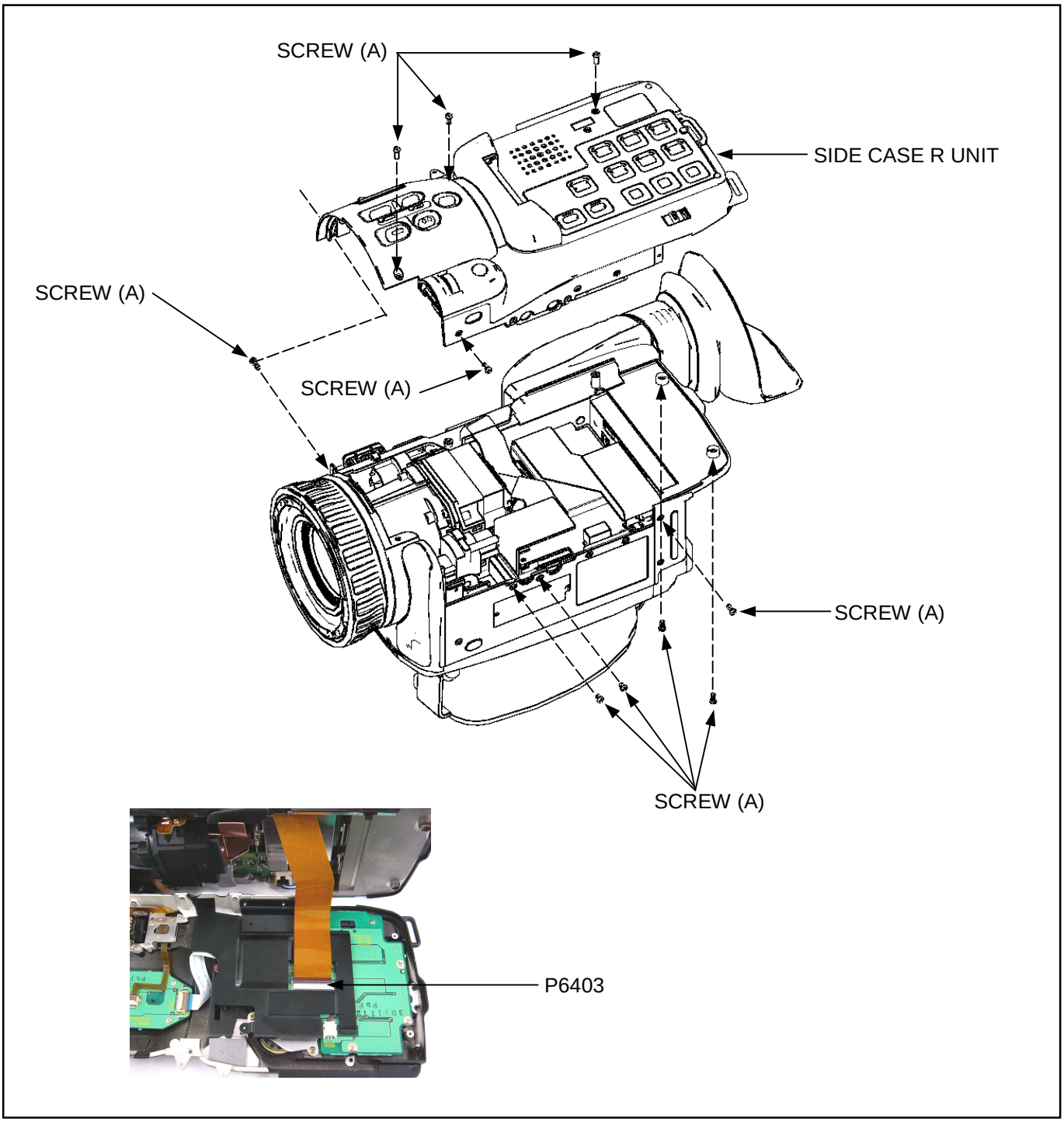


Figure 4-1

# 5. Removal of POWER C.B.A.

1. Remove the MIC Case Unit.
2. Remove the Side case R Unit.
3. Disconnect a connector P1001 on POWER C.B.A. as shown in figure 5-1.
4. Unscrew the 2 screws (A) and remove the POWER C.B.A.. Be careful because the CAMERA C.B.A.(bottom side of POWER C.B.A.) and the connector in the POWER C.B.A are combining the one connector.

**(Note in installation)**

1. In case new POWER C.B.A. is installed, put the Cooling Sheet in following position as shown in figure 5-1.

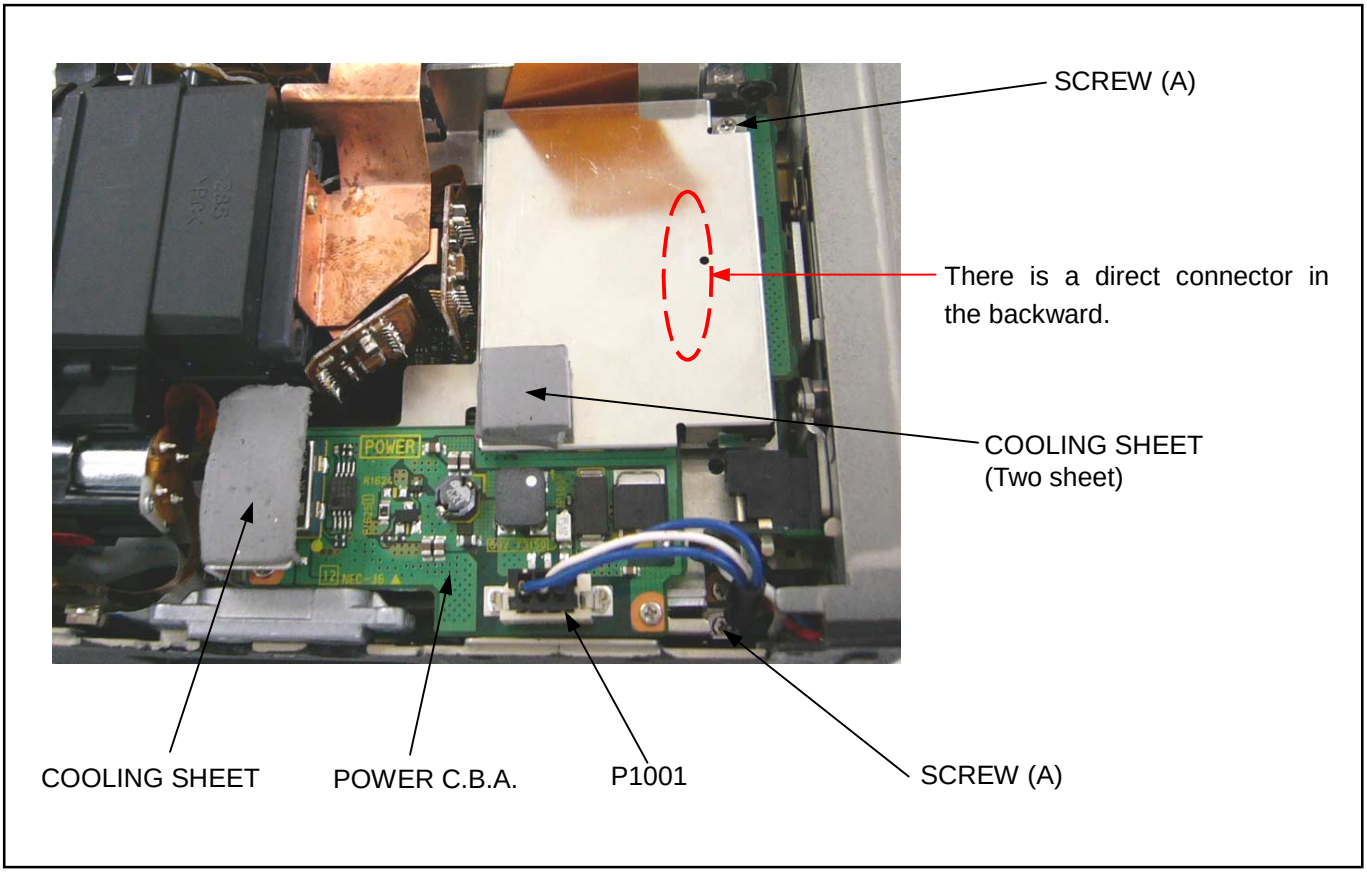


Figure 5-1

# 6. Removal of TOP VF Unit

1. Remove the MIC Case Unit.
2. Remove the Side Case R Unit.
3. Unscrew the 4 screws (A) as shown in figure 6-1.
4. Lift up the TOP VF and disconnect a connector P2215 on VTR C.B.A., then remove the TOP VF Unit as shown in figure 6-1. Then be careful because the portion A and B are hooked together.

**(Note in installation)**

1. In case the flexible cable (A) is changed to new one, bend it to Z character as shown in figure 6-1.
2. The CCD Heat Sink is located to outside of TOP VF Unit as shown in figure 6-1.

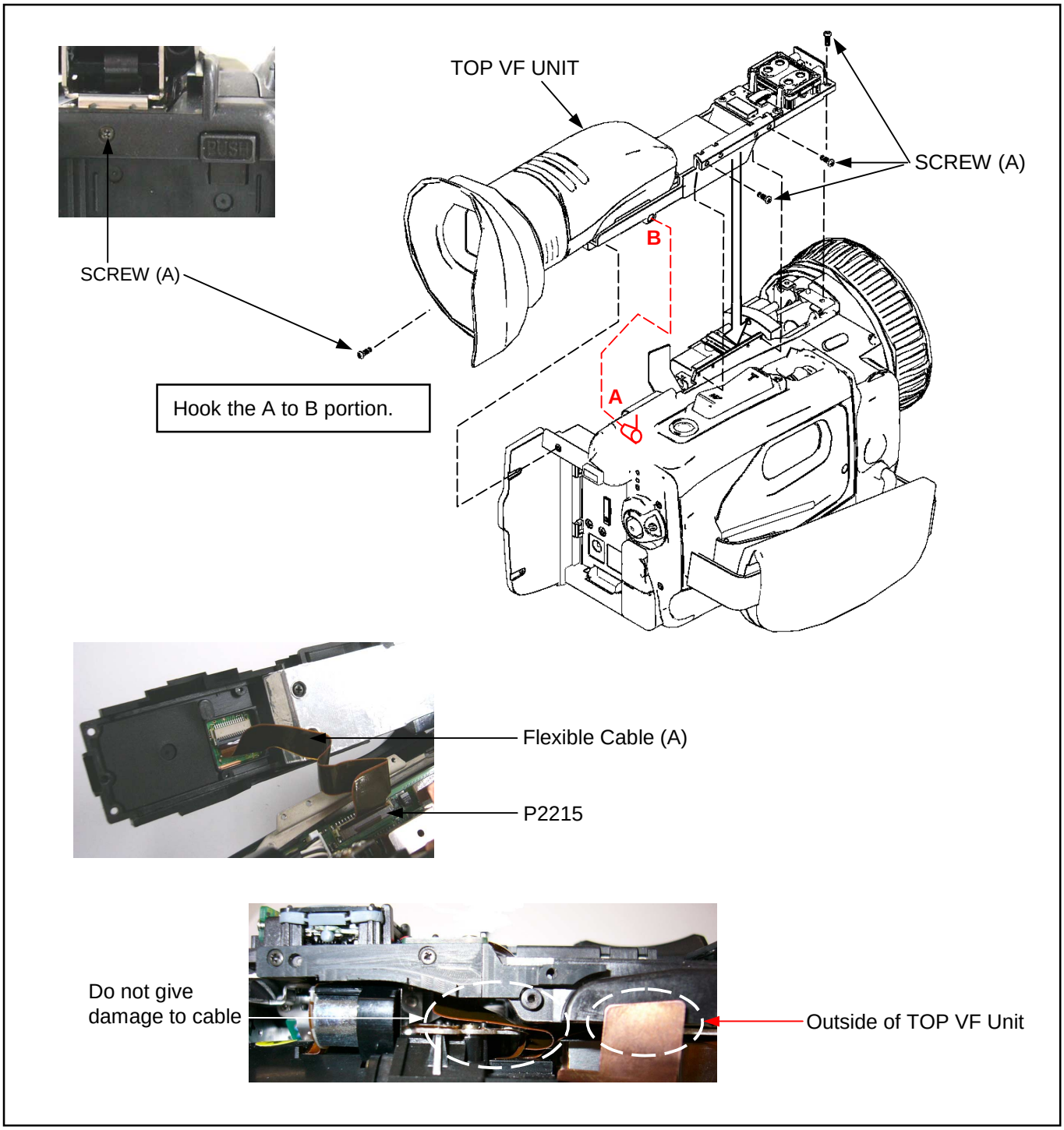


Figure 6-1

# 7. Removal of Front Case Unit

1. Remove the MIC Case Unit.
2. Remove the Side Case R Unit.
3. Remove the TOP VF Unit.
4. Unscrew the 3 screws (A) as shown in figure 7-1.
5. Disconnect a connector P6301 and remove the Front Case Unit as shown in figure 7-1.

**(Note in installation)**

1. When installing the Front Case Unit, do not give damage the Lens.
2. In case of the flexible cable (it connected with P6301 and CAMERA C.B.A.) is exchange to new one, bend it to Z character to put under the Lens Unit.

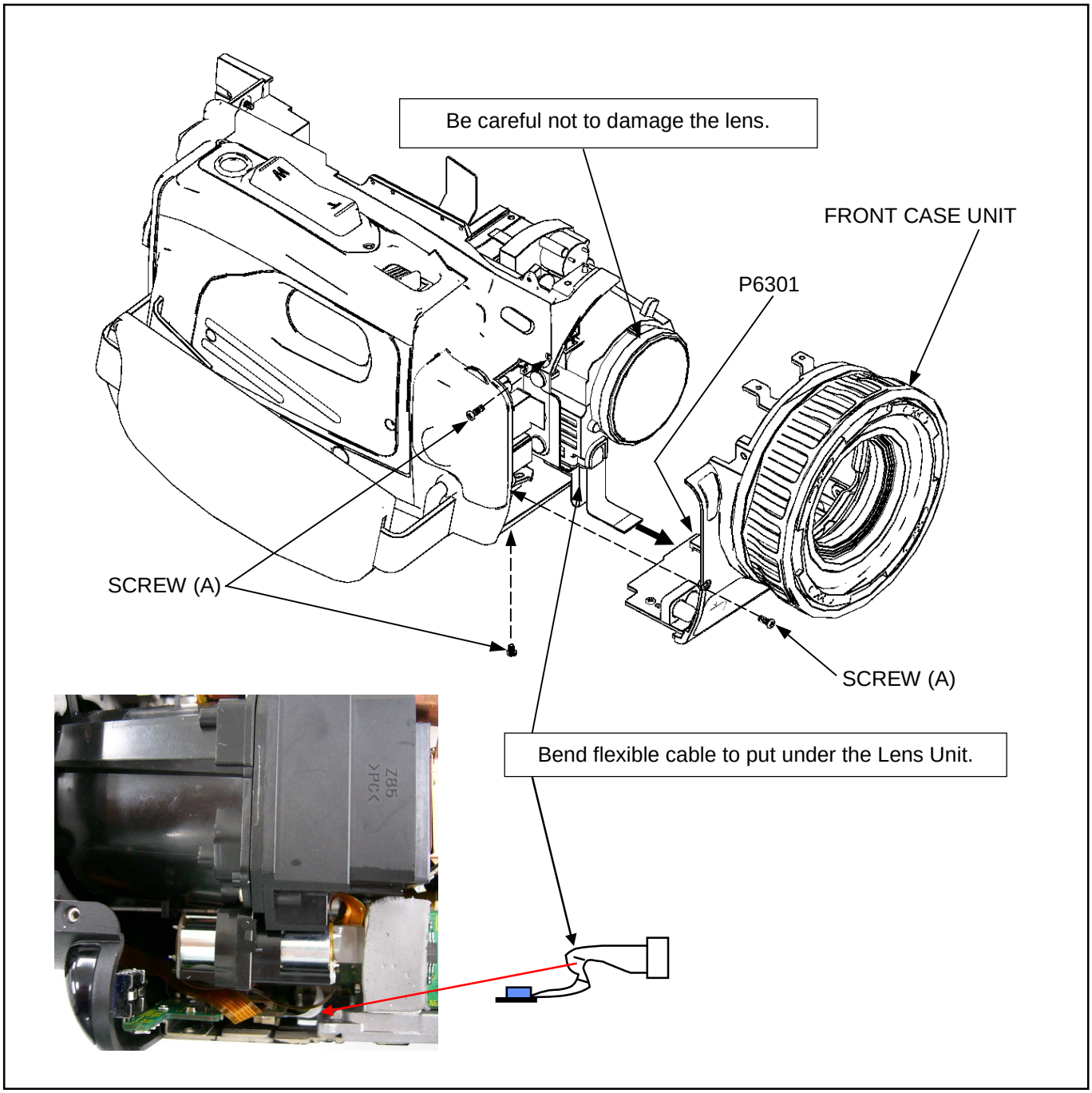


Figure 7-1

# 8. Removal of Lens Unit

1. Removal of MIC Case Unit.
2. Removal of Side Case R Unit.
3. Removal of POWER C.B.A..
4. Removal of TOP VF Unit.
5. Removal of Front Case Unit.
6. Unscrew the 2 screws (A) and remove the CCD CON STOPPER as shown in figure 8-1.
7. Disconnect the connector P1 and P8 on CAMERA C.B.A. as shown in figure 8-1.
8. Unscrew the 4 screws (B) and remove the Lens Unit.
9. Unscrew the 4 screws (C) and remove the Lens Frame Unit from Lens Unit as shown in figure 8-1.

**(Note in installation)**

1. In case a new Lens Unit is installed, bend the flexible cable (A) to Z character as shown in figure 8-1.

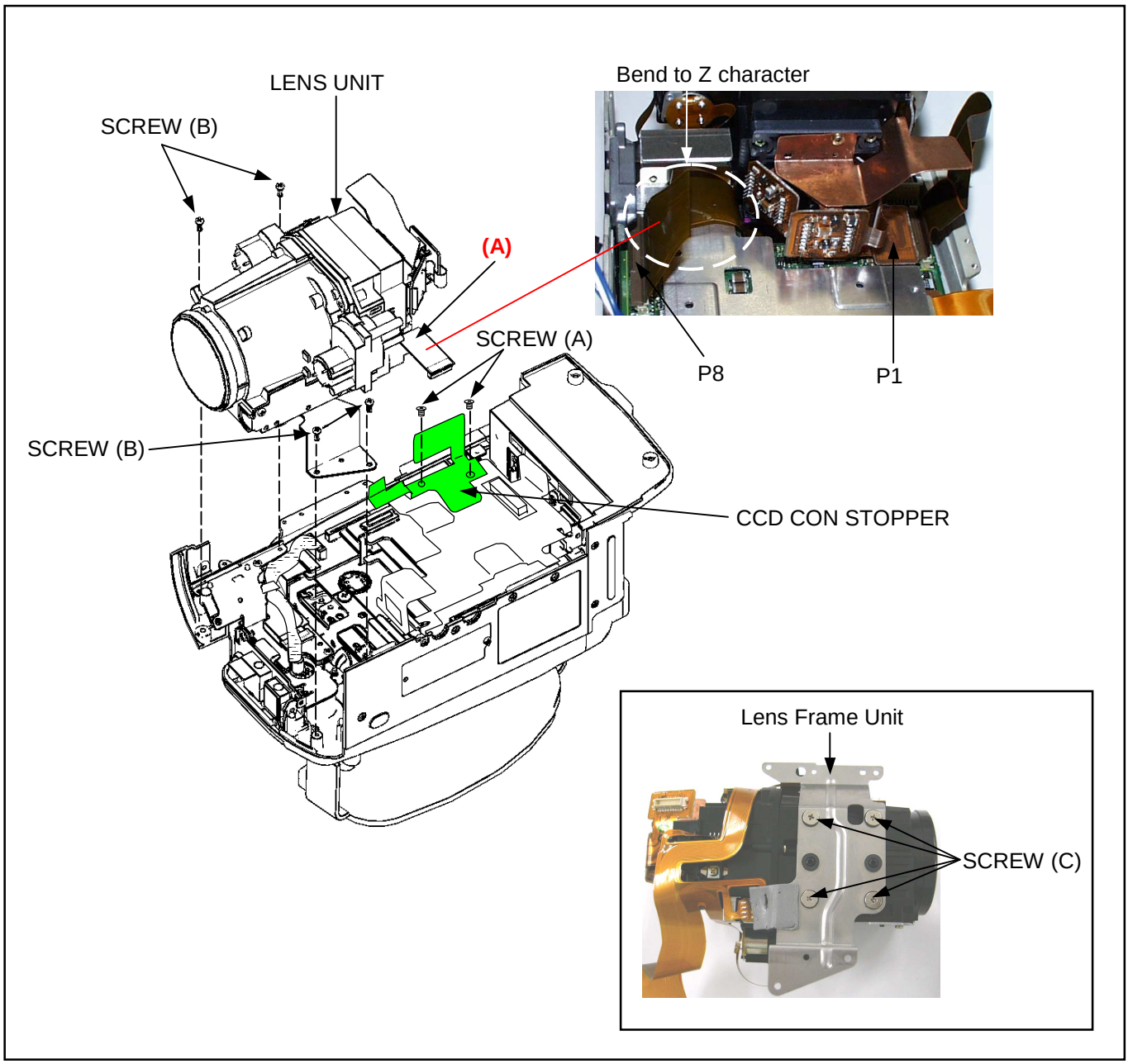


Figure 8-1

# 9. Removal of Rear Case Unit & CAMERA C.B.A.

1. Removal of MIC Case Unit.
2. Removal of Side Case R Unit.
3. Removal of POWER C.B.A..
4. Removal of TOP VF Unit.
5. Removal of Front Case Unit.
6. Removal of Lens Unit.
7. Remove the 3 screws (A) as shown in figure 9-1.
8. Disconnect a connector P2 on CAMERA C.B.A. as shown in figure 9-1.
9. Unscrew the 2 screws (B) on CAMERA C.B.A. as shown in figure 9-1.
10. It shifts the Rear Case Unit as much as showing in figure 9-1 and remove the CAMERA C.B.A.. Be careful because the VTR C.B.A.(bottom side of CAMERA C.B.A.) and the connector in the CAMERA C.B.A are combined.
11. Disconnect a connector P2216 on VTR C.B.A. and remove the Rear Case Unit.

**(Note in installation)**

1. When installing the CAMERA C.B.A., Attach the CAMERA C.B.A. to portion “A” of Mech. Attachment Frame as shown in figure 9-1.
2. When installing the CAMERA C.B.A., the parts which are shown in figure 9-1 on the CAMERA C.B.A. are combined with the VTR C.B.A. with the direct connector, pushing CAMERA C.B.A. well.
3. When installing the Rear Case Unit, it puts section “B” in the hole of flexible cable, which is connected in P2216 as shown in figure 9-1.

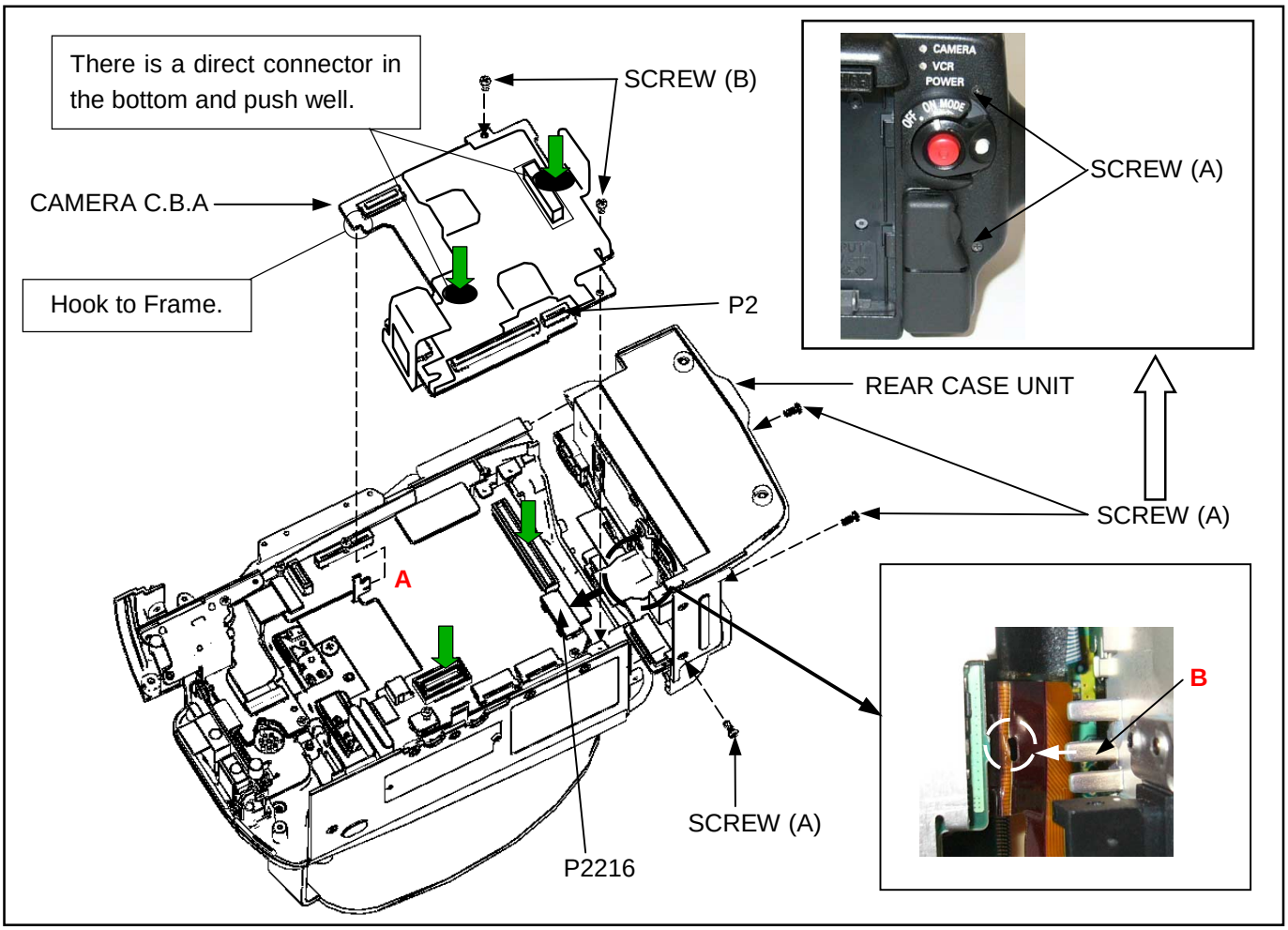


Figure 9-1

# 10. Removal of Cassette Cover Unit

1. Remove the MIC Case Unit.
2. Remove the Side case R Unit.
3. Remove the POWER C.B.A..
4. Remove the TOP VF Unit.
5. Remove the Front Case Unit.
6. Remove the Lens Unit.
7. Remove the Rear Case Unit and CAMERA C.B.A..
8. Unscrew the 2 screws (A) and remove the Cassette Cover Unit as shown in figure 10-1.

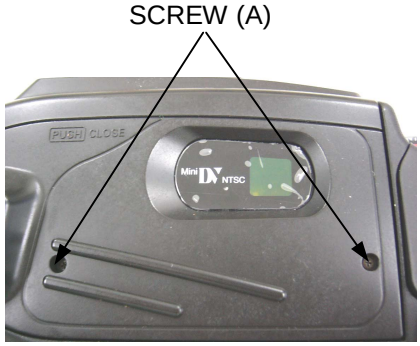


Figure 10-1

**(Note in installation)**

1. Pass flexible cable through the portion “A” as shown in figure 10-2.
2. Attach the “B” portion to “C” portion as shown in figure 10-2 and tighten the 2 screws (A).

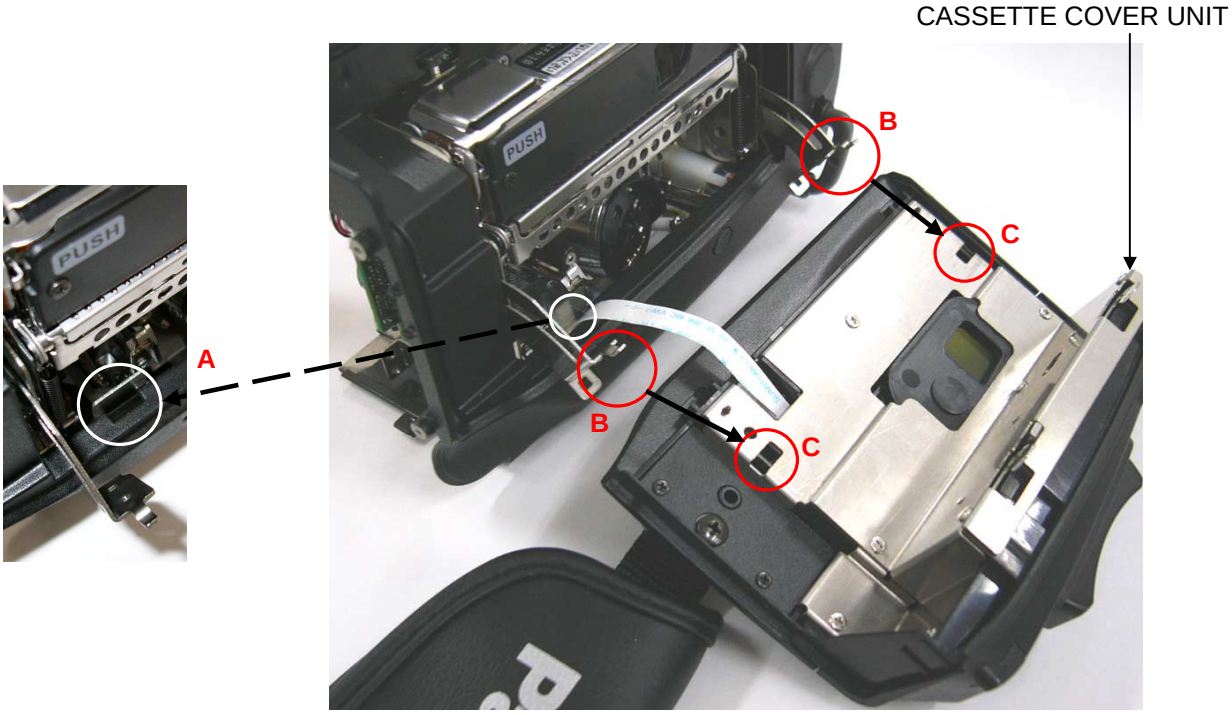


Figure 10-2

# 11. Removal of Mechanism Unit & VTR C.B.A.

1. Remove the MIC Case Unit.
2. Remove the Side Case R Unit.
3. Remove the POWER C.B.A..
4. Remove the TOP VF Unit.
5. Remove the Front Case Unit.
6. Remove the Lens Unit.
7. Remove the Rear Case Unit and CAMERA C.B.A..
8. Remove the Cassette Cover Unit.
9. Disconnect the connector P2219 and P2222 on VTR C.B.A. as shown in figure 11-1.
10. Disconnect the connector P2217 on VTR C.B.A. and P4101 on SIDE JACK C.B.A., then remove the flexible cable (A) as shown in figure 11-1.
11. Unscrew the 6 screws (A) and remove the Unit (Mechanism & VTR C.B.A.) as shown in figure 11-1.

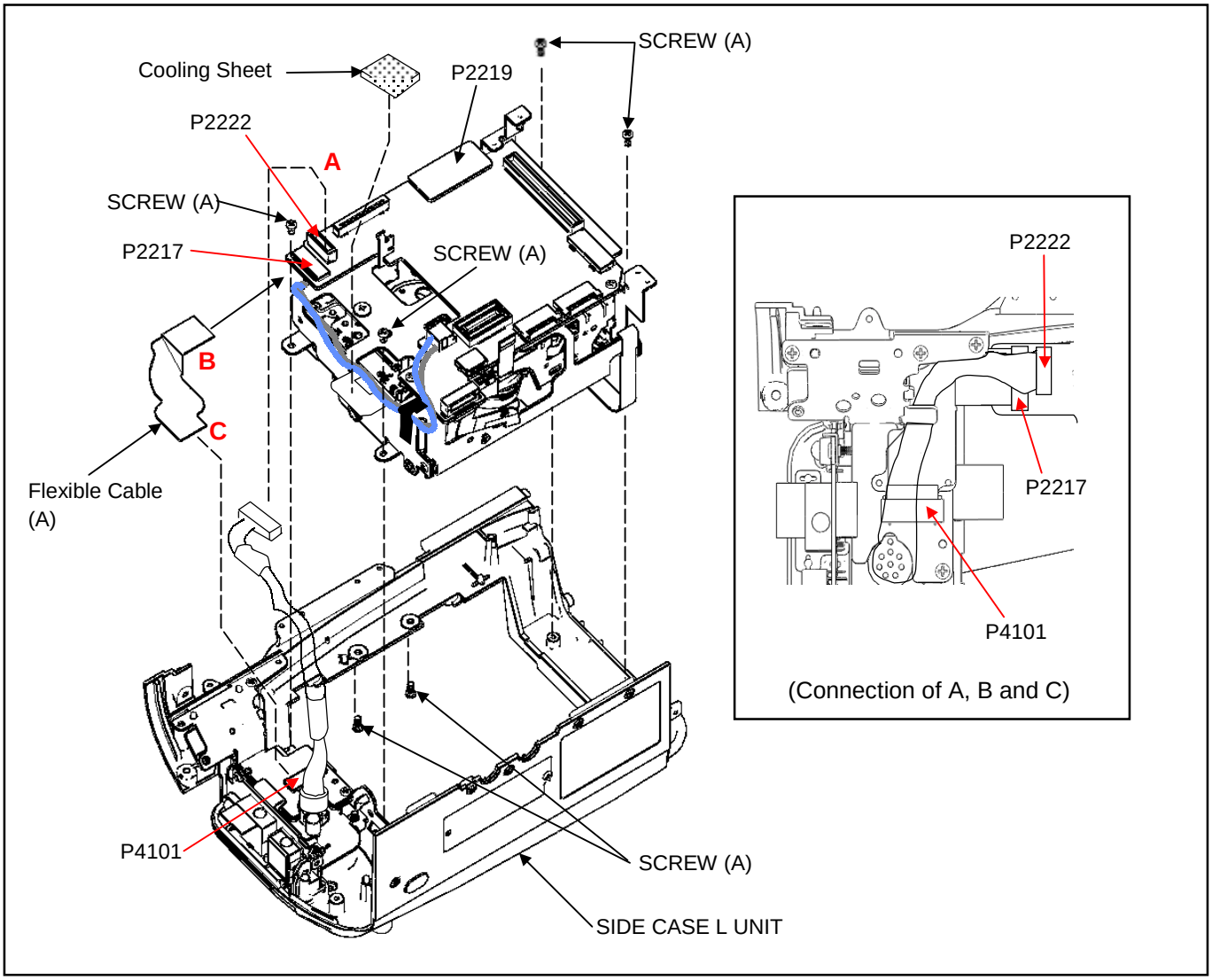


Figure 11-1

**NOTE:** MECH Attachment Frame requires replacement, make sure to move the Cooling Sheet to the new MECH Attachment Frame. See figure 11-1.

12. Disconnect the 7 connectors (A),(B),(C),(D),(E),(F) and (G) on VTR C.B.A. as shown in figure 11-2.

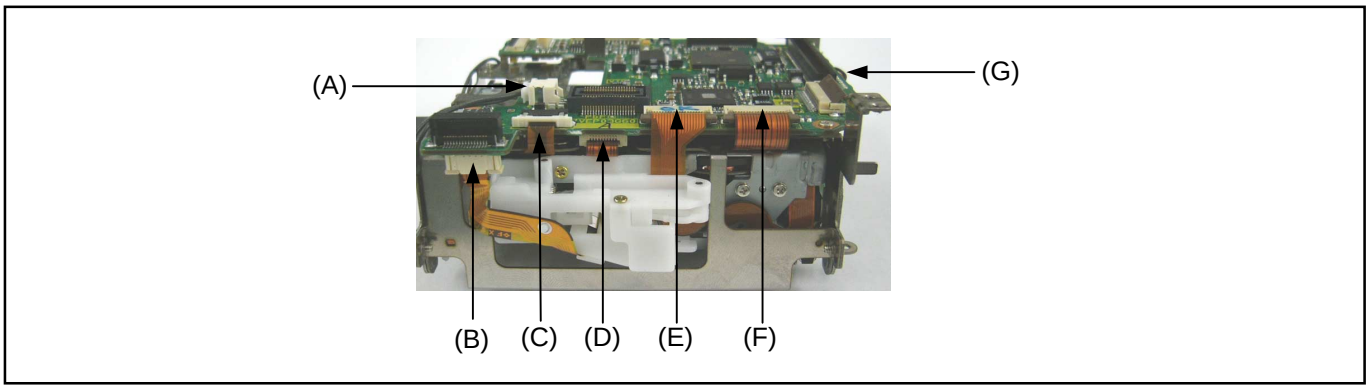


Figure 11-2

13. Unscrew the 2 screws (B) and remove the VTR C.B.A. as shown in figure 11-3.
14. Unscrew the 3 screws (C) and remove the Mechanism Unit from Mech. Attachment Frame Unit as shown in figure 11-3.
15. Unscrew the 2 screws (D) and remove the Garage Cover as shown in figure 11-3.

**NOTE:** In case a new Mechanism unit is installed, put the FPC Protection Sheet in the following position as shown in figure 11-3.

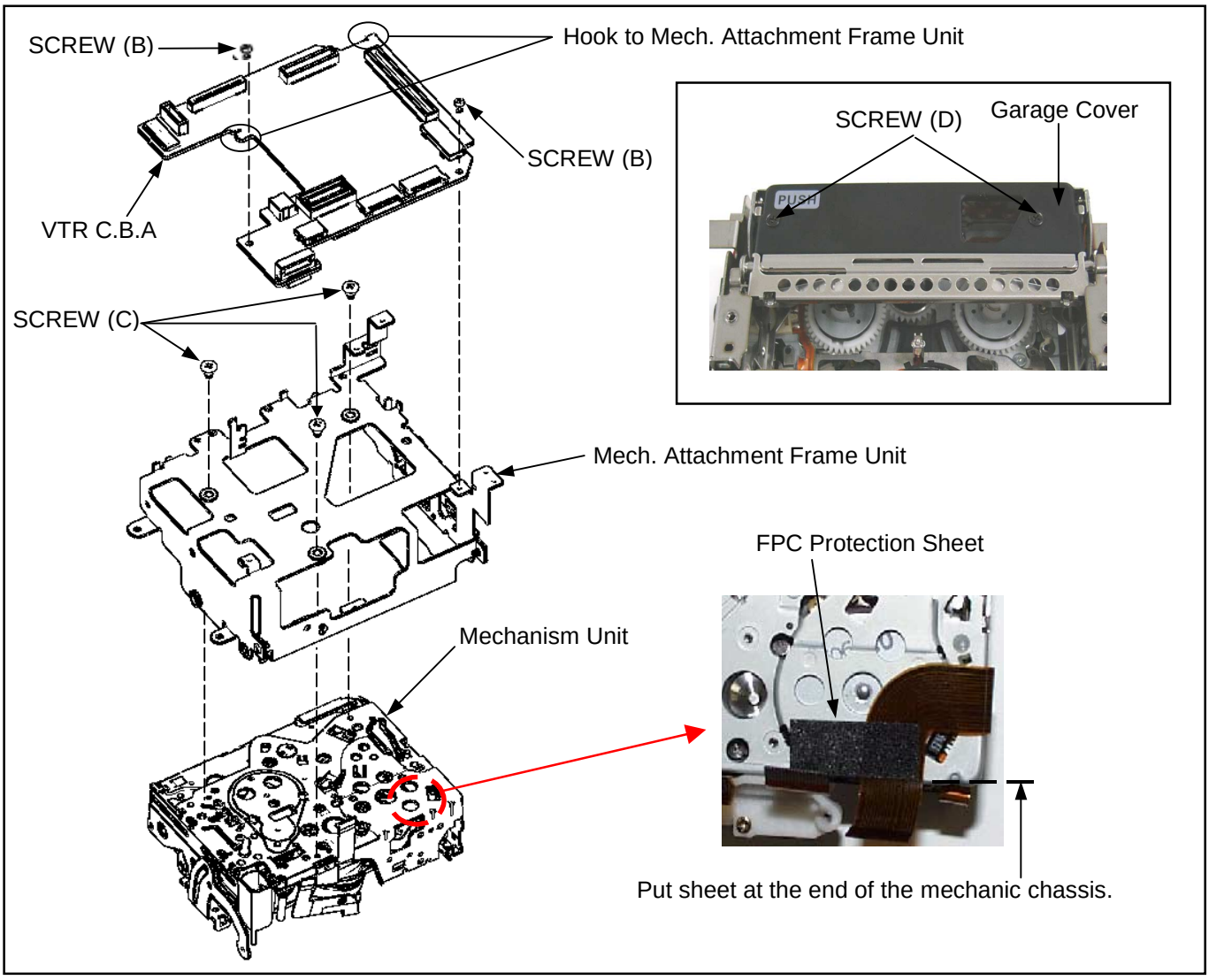


Figure 11-3

# 12. Removal of LCD Unit

1. Remove the MIC Case Unit.
2. Remove the Side Case R Unit.
3. Unscrew the 3 screws (A) and remove the HEAT SINK(SIDE R) as shown in figure 12-1.
4. Remove the FFC Protection Sheet as shown in figure 12-2.
5. Remove the Cooling Sheet to unscrew the screw (B) and unscrew the screw (B) and (C) as shown in figure 12-2.
6. Remove the HINGE COVER and unscrew the 2 screws (D) as shown in figure 12-3.
7. Disconnect connector P6404 on R SIDE C.B.A. and remove the LCD Unit as shown in figure 12-2.

**(Note in installation)**

1. When installing the FFC Protection Sheet, fully open the LCD Panel and Put on the original position as shown in figure 12-2.
2. Do not forget put on the Cooling Sheet after tightening the screw (B) as shown in figure 12-2.

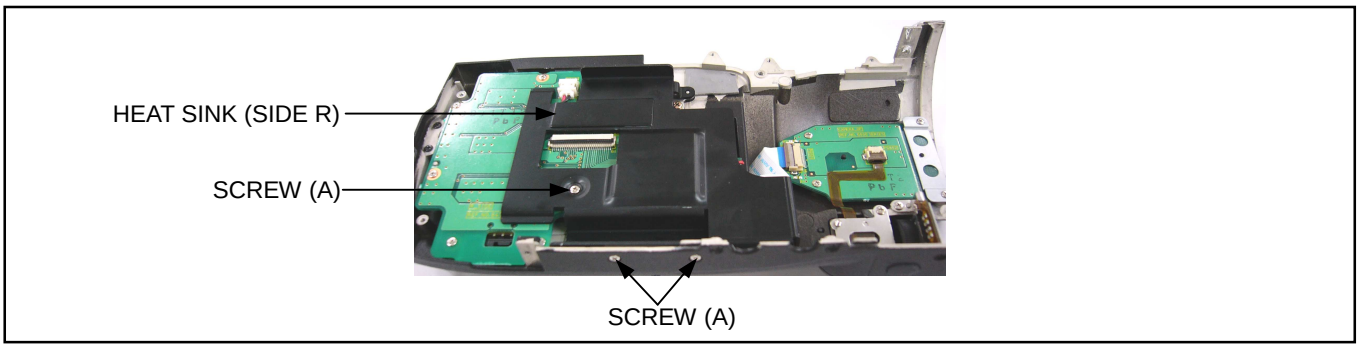


Figure 12-1

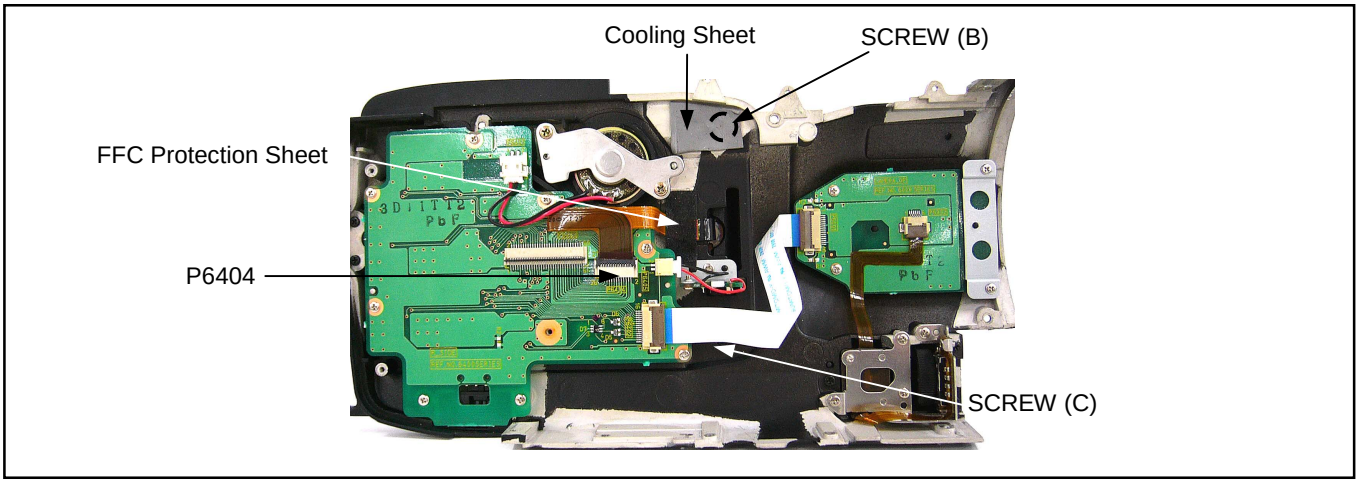


Figure 12-2

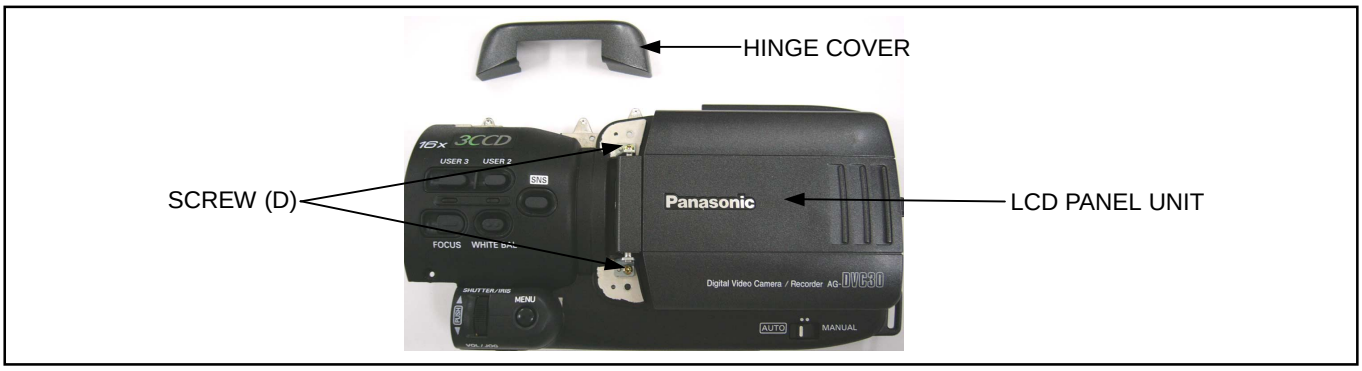


Figure 12-3

# 13. Removal of EVF Unit

1. Removal of MIC Case Unit.
2. Removal of Side Case R Unit.
3. Removal of TOP VF Unit.
4. Disconnect connector P1 on EVF CONNECT C.B.A. as shown in figure 13-1.
5. Unscrew the 4 screws (A) and remove the EVF Unit and EVF SLIDER Unit from EVF LCD HOLD Unit as shown in figure 13-2.
6. Unscrew the 3 screws (B) and remove the EVF SLIDE COVER as shown in figure 13-3.
7. Unscrew the 4 screws (C) and remove the EVF Unit from EVF SLIDER Unit as shown in figure 13-4.

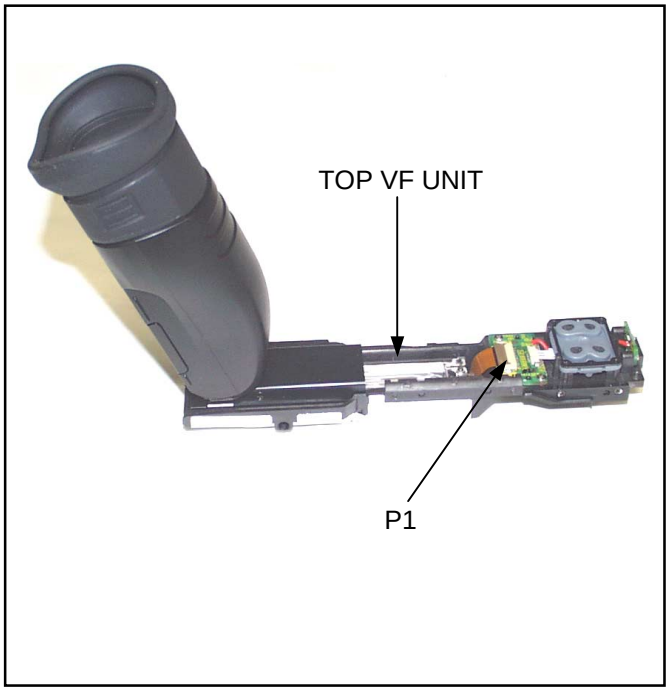


Figure 13-1

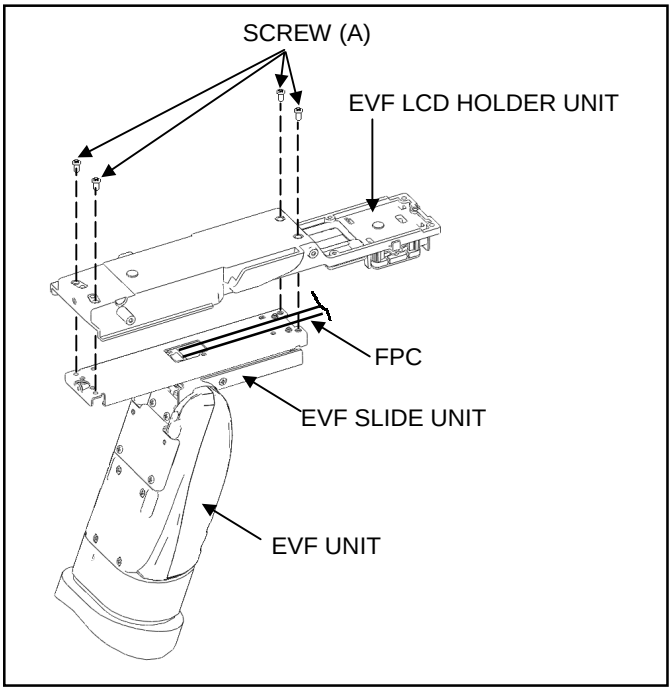


Figure 13-2

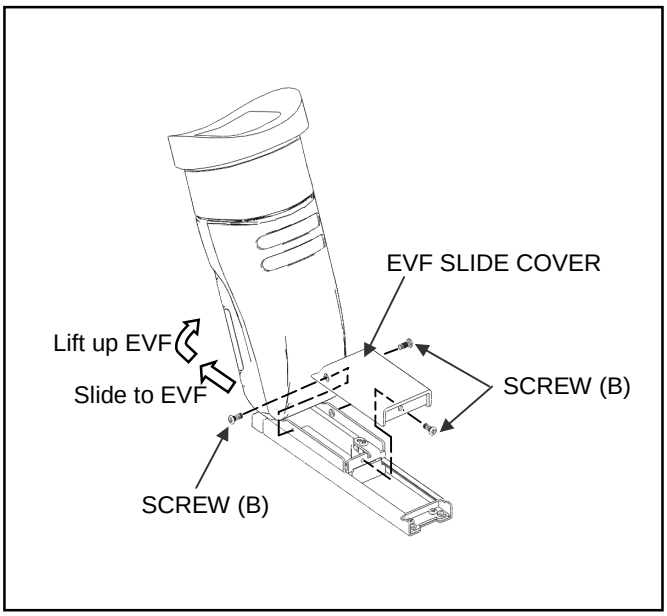


Figure 13-3

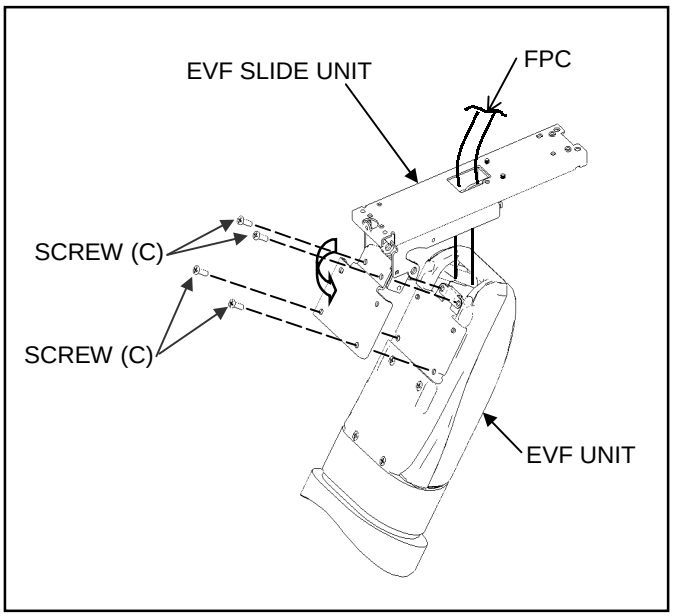


Figure 13-4